TECHNICAL GUIDE

MODELS: MV

MODULAR VARIABLE SPEED AIR HANDLERS FOR USE WITH SPLIT SYSTEM COOLING & HEAT PUMP

1200 - 2000 CFM BLOWERS

3 - 5 TON COILS

OPTIONAL 1 & 3ϕ ELECTRIC HEATERS

AHRI CERTIFIED™ www.ahridirectory.org

c UL us LISTED

ISO 9000 REGISTRATION
ISO 9001
Certified Quality
Management System

Due to continuous product improvement, specifications are subject to change without notice.

Visit us on the web at:

www.york.com

Additional rating information can be found at:

www.ahridirectory.org

DESCRIPTION

This unique modular system allows the flexibility to handle any application. These versatile coils and blowers may be used for upflow, downflow, or horizontal left or right applications. They may be combined to function as a cooling only unit or with a heat pump including electric heat for 1 and 3 phase applications. The blower and electric heater could be used as stand alone electric furnaces.

FEATURES

Blowers - Models to match any air flow or voltage requirement. The compact size allows easy installation. Blowers are sized to deliver design air quantity both efficiently and quietly. The motors provide a selection of air quantities to match any application. All models include a one-minute blower off delay as standard to enhance system efficiency ratings. The durable, pre-painted steel protects the unit against rust and corrosion. All models have 1 inch foil face fiber glass insulation, providing a thermal insulation value of R-4.2.

Coils - Staggered rows of rifled copper tubes are mechanically expanded into enhanced surface aluminum fins to provide high heat transfer and long-lasting quality. The MC multi-position coils may be used for upflow, downflow, and horizontal left or right applications. Coil cabinets are insulated with 3/4" foil face insulation to prevent sweating.

Thermal Expansion Valves - Available with R-410A factory installed TXV's. Air Handlers maybe ordered as "Flex-coil" unit without a factory installed mertering device. Flex-coil models allow for field installed R-22 or R-410A TXV's for added flexibility to meet refrigerant system choice.

Electric Heaters - Both single and three phase electric heater models are available to match any requirement. All heaters include nickel-chromium elements with a 5-year limited warranty on 1 Ø heating elements and 1 year limited warranty on 3 Ø heating elements. Sequential operation is provided to control heaters in all models. Circuit breakers are used in 208/230 volt, single-phase heaters of 15 KW and larger.

Models equipped with circuit breakers may be altered in the field to use multi-source power supply. Over-temperature limit switches provide protection from airflow loss with fusible link backup protection.

Communication - These models may be connected as part of a communciations system using a 4-wire connection bus.

Accessories - A full line of matching accessories available for use with the blower and coils to allow any type application.

LIMITATIONS

These units must be wired and installed in accordance with all national and local safety codes.

Voltage limits are as follows:

AIR HANDLER VOLTAGE	NORMAL OPERATING VOLTAGE RANGE*
208/230-1-60	187 - 253

* Rated in accordance with ARI Standard 110, utilization range "A".

Air flow must be within the minimum and maximum limits approved for electric heat, evaporator coils and outdoor units.

DIMENSIONS - (BLOWER WITH MC COILS)

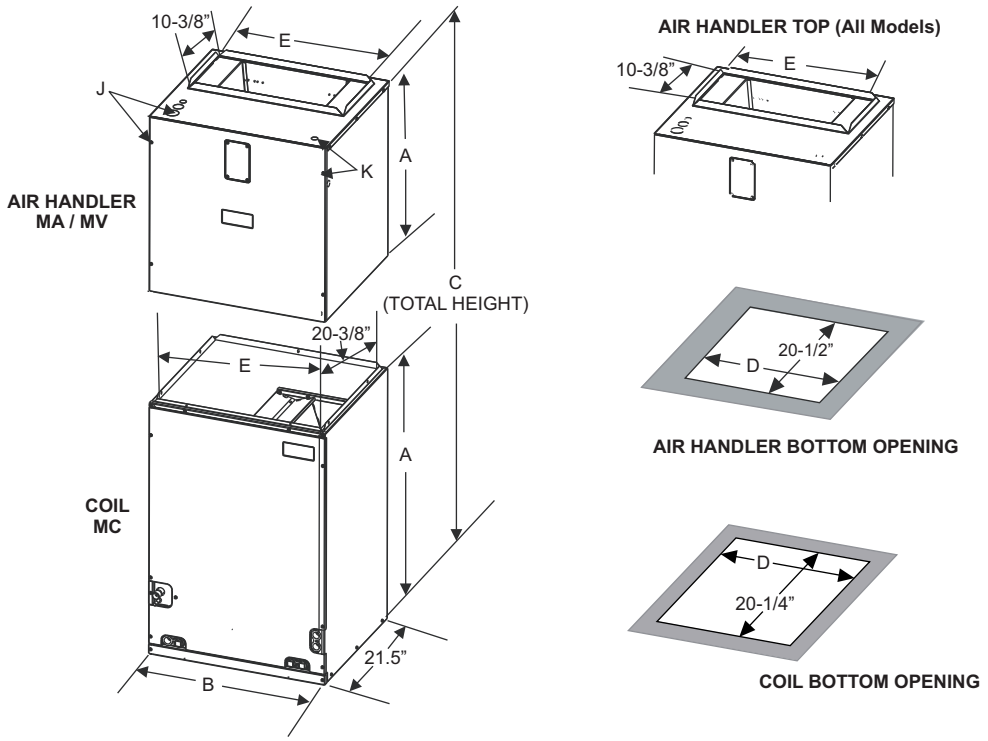

NOTE: Power wiring may be brought into the unit through one of the knockouts in either the top or the left side panel. Multiple knockouts are provided to accommodate all of the electric heat and transformer accessories that are available. Use the knockouts that provide the best wire routing for the accessory being used.

DIMENSIONS

Model	Dimensions					Wiring K.O.'s[1]		Refrigerant Connections	
	A	B	C	D	E	J	K	Line Size	
	Height	Width	Total Height			Power	Control	Liquid	Vapor
MV12B	25	17.5	47 to 57 Depending on combination	16.5	14-19/32	7/8" (1/2") 1-3/8" (1") 1-23/32" (1-1/4")	7/8" (1/2")	–	–
MV12D	25	24.5		23.5	21-19/32			–	–
MV16C	25	21		20	18-3/32			–	–
MV20D	25	24.5		23.5	21-19/32			–	–
MC18B3XH1	22	17.5	47 to 57 Depending on combination	16.5	16 3/8	–	–	3/8	3/4
MC18B4FH1	22	17.5		16.5	16 3/8	–	–	3/8	3/4
MC24B3XH1	26.5	17.5		16.5	16 3/8	–	–	3/8	3/4
MC24B4FH1	26.5	17.5		16.5	16 3/8	–	–	3/8	3/4
MC30B3XH1	26.5	17.5		16.5	16 3/8	–	–	3/8	3/4
MC30B4FH1	26.5	17.5		16.5	16 3/8	–	–	3/8	3/4
MC35B3XH1	22	17.5		16.5	16 3/8	–	–	3/8	3/4
MC35B4FH1	22	17.5		16.5	16 3/8	–	–	3/8	3/4
MC35B4GH1	22	17.5		16.5	16 3/8	–	–	3/8	3/4
MC35B4HH1	22	17.5		16.5	16 3/8	–	–	3/8	3/4
MC35C3XH(1,2)	26.5/22	21		20	19 7/8	–	–	3/8	3/4
MC35C4FH1	22	21		20	19 7/8	–	–	3/8	3/4
MC35C4GH1	22	21		20	19 7/8	–	–	3/8	3/4
MC35C4HH1	22	21		20	19 7/8	–	–	3/8	3/4

For notes, see Page 3.

DIMENSIONS (Continued)

Model	Dimensions					Wiring K.O.'s[1]		Refrigerant Connections	
	A	B	C	D	E	J	K	Line Size	
	Height	Width	Total Height			Power	Control	Liquid	Vapor
MC36B3XH1	26.5	17.5	47 to 57 Depending on combination	16.5	16 3/8	–	–	3/8	7/8
MC36B4FH1	26.5	17.5		16.5	16 3/8	–	–	3/8	7/8
MC36B4GH1	26.5	17.5		16.5	16 3/8	–	–	3/8	7/8
MC36B4HH1	26.5	17.5		16.5	16 3/8	–	–	3/8	7/8
MC36C3XH1	26.5	21		20	19 7/8	–	–	3/8	7/8
MC36C4FH1	26.5	21		20	19 7/8	–	–	3/8	7/8
MC36C4GH1	26.5	21		20	19 7/8	–	–	3/8	7/8
MC36C4HH1	26.5	21		20	19 7/8	–	–	3/8	7/8
MC42B3XH1	32	17.5	47 to 57 Depending on combination	16.5	16 3/8	–	–	3/8	7/8
MC42B4FH1	32	17.5		16.5	16 3/8	–	–	3/8	7/8
MC42B4HH1	32	17.5		16.5	16 3/8	–	–	3/8	7/8
MC42C3XH1	32	21		20	19 7/8	–	–	3/8	7/8
MC42C4FH1	32	21		20	19 7/8	–	–	3/8	7/8
MC42C4HH1	32	21		20	19 7/8	–	–	3/8	7/8
MC43B3XH1	26.5	17.5		16.5	16 3/8	–	–	3/8	7/8
MC43B4GH1	26.5	17.5		16.5	16 3/8	–	–	3/8	7/8
MC43B4KH1	26.5	17.5		16.5	16 3/8	–	–	3/8	7/8
MC43C3XH1	26.5	21		20	19 7/8	–	–	3/8	7/8
MC43C4GH1	26.5	21		20	19 7/8	–	–	3/8	7/8
MC43C4KH1	26.5	21	47 to 57 Depending on combination	20	19 7/8	–	–	3/8	7/8
MC48C3XH1	32	21		20	19 7/8	–	–	3/8	7/8
MC48C4FH1	32	21		20	19 7/8	–	–	3/8	7/8
MC48C4HH1	32	21		20	19 7/8	–	–	3/8	7/8
MC48C4JH1	32	21		20	19 7/8	–	–	3/8	7/8
MC48C4KH1	32	21		20	19 7/8	–	–	3/8	7/8
MC48D3XH1	32	24.5		23.5	23 3/8	–	–	3/8	7/8
MC48D4FH1	32	24.5		23.5	23 3/8	–	–	3/8	7/8
MC48D4HH1	32	24.5		23.5	23 3/8	–	–	3/8	7/8
MC48D4JH1	32	24.5		23.5	23 3/8	–	–	3/8	7/8
MC48D4KH1	32	24.5		23.5	23 3/8	–	–	3/8	7/8
MC60D3XH1	32	24.5		23.5	23 3/8	–	–	3/8	7/8
MC60D4GH1	32	24.5		23.5	23 3/8	–	–	3/8	7/8
MC60D4HH1	32	24.5		23.5	23 3/8	–	–	3/8	7/8
MC60D4JH1	32	24.5		23.5	23 3/8	–	–	3/8	7/8
MC60D4KH1	32	24.5		23.5	23 3/8	–	–	3/8	7/8
MC62D3XH1	36	24.5	61	23.5	23 3/8	–	–	3/8	7/8
MC62D4HH1	36	24.5		23.5	23 3/8	–	–	3/8	7/8
MC62D4JH1	36	24.5		23.5	23 3/8	–	–	3/8	7/8
MC62D4KH1	36	24.5		23.5	23 3/8	–	–	3/8	7/8

All MC coils include a factory installed horizontal drain pan.
(3X) = Models require field installed metering device.

1. Parenthesis indicate conduit size.

** Thermal Expansion Device Indicators - "2" indicates R-22 TXV is factory installed, "3X" indicates unit is a flex-coil model with a field installed R-22 or R-410A TXV, and "4" indicates R-410A TXV is factory installed. Letter indicates TXV size as required, see outdoor unit technical information for proper matches and requirements.

"H" models are available with a factory installed horizontal drain pan.

COOLING CAPACITY - Coil Only

Blower Model	Coil Model	Rated CFM	Entering Air °F (Dry/Wet Bulb)	MBH @ Evaporator Temperature and Corresponding Pressure °F/PSIG			
				35/61.5	40/68.5	45/76.0	50/84.0
Multi-Position - Upflow/Downflow/Horizontal							
MV12B	MC30B**H	1025	85/72	41.5	37.8	33.7	29.5
			80/67	36.2	32.4	28.6	24.5
			75/62	29.1	25.3	24.0	19.2
			70/57	24.1	21.5	18.7	15.8
	MC36B**H	1250	85/72	52.0	47.3	42.3	37.3
			80/67	41.7	36.8	32.3	27.4
			75/62	32.5	27.3	29.8	22.2
			70/57	27.9	25.8	23.8	22.2
MV12D	MC48D**H	1125	85/72	46.8	42.4	37.6	33.0
			80/67	37.4	33.3	29.4	24.3
			75/62	28.9	24.6	21.7	19.6
			70/57	25.1	23.3	21.7	19.6
	MC60D**H	1275	85/72	53.7	48.4	43.5	37.5
			80/67	43.0	38.0	33.3	27.7
			75/62	33.1	28.1	24.5	22.4
			70/57	28.8	26.5	24.5	22.4
	MC62D**H	1450	85/72	91.7	78.4	68.1	52.3
			80/67	73.4	61.5	52.0	38.6
			75/62	57.3	45.6	38.4	31.2
			70/57	49.2	43.0	38.4	31.2
MV16C	MC42C**H	1400	85/72	88.4	76.0	63.3	50.0
			80/67	70.8	59.4	48.4	37.0
			75/62	55.2	43.9	35.8	29.9
			70/57	47.4	41.5	35.8	29.9
	MC48C**H	1650	85/72	100.5	86.4	72.0	56.8
			80/67	80.4	67.5	55.0	42.1
			75/62	62.7	49.9	40.7	34.0
			70/57	53.9	47.2	40.7	34.0
MV20D	MC48D**H	1725	85/72	119.9	101.0	80.0	62.2
			80/67	96.0	79.2	62.6	45.8
			75/62	74.0	58.6	46.2	37.0
			70/57	64.3	55.4	46.2	37
	MC60D**H	2000	85/72	124.8	105.2	85.3	64.7
			80/67	99.9	82.5	65.2	47.7
			75/62	77	61.1	48.1	38.6
			70/57	66.9	57.7	48.1	38.6
	MC62D**H	2200	85/72	131.0	110.5	89.6	67.9
			80/67	104.9	86.6	68.5	50.1
			75/62	81.8	64.2	50.5	40.5
			70/57	70.2	60.6	50.5	40.5

PHYSICAL & ELECTRICAL DATA

Model		MV12B	MV12D	MV16C	MV20D
Blower - Diameter x Width		10 x 7	10 x 10	10 x 10	10 x 10
Motor	HP	1/2	1/2	3/4	1
	Nominal RPM	1200	1200	1200	1200
Voltage		208/230			
Amps	Full Load (230)	4.3	4.3	5.0	7.0
Permanent Filter[1]	Type	DISPOSABLE OR PERMANENT			
	Size	16 x 20 x 1	24 x 20 x 1	20 x 20 x 1	24 x 20 x 1
	Filter Bulk Kit	1PF0601BK	1PF0604BK	1PF0602BK	1PF0604BK
Shipping/Operating Weight (lbs.)		75/71	88/82	88/82	94/88

1. Field Supplied.

FULL CASED "A" TYPE MULTI-POSITION

Model	Application	Refrig. Conn. Types	Face Area (Sq. Ft.)	Rows Deep	Fin Per In.	Coil Size	Tube Geometry	Tube Dia.	Fin Type	TXV	Operating Weight (Lbs.)
MC18B3XH1	Cooling/ Heat Pump	Sweat	3.40	2	14	(2) 14 x 17.5	1 x 0.866	3/8	Enhanced	None	53
MC18B4FH1										4F	53
MC24B3XH1	Cooling/ Heat Pump	Sweat	4.38	2	14	(2) 18 x 17.5	1 x 0.866	3/8	Enhanced	None	56
MC24B4FH1										4F	56
MC30B3XH1	Cooling/ Heat Pump	Sweat	4.38	2	14	(2) 18 x 17.5	1 x 0.866	3/8	Enhanced	None	56
MC30B4EH1										4E	56
MC30B4FH1										4F	56
MC35B3XH2	Cooling/ Heat Pump	Sweat	3.9	3	12	(2) 16 x 17.5	1 x 0.866	3/8	Enhanced	None	65
MC35B4FH1										4F	67
MC35B4GH1										4G	67
MC35B4HH1										4H	67
MC35C3XH(1,2)	Cooling/ Heat Pump	Sweat	3.9	3	12	(2) 16 x 17.5	1 x 0.866	3/8	Enhanced	None	67
MC35C4FH1										4F	69
MC35C4GH1										4G	69
MC35C4HH1										4H	69
MC36B3XH1	Cooling/ Heat Pump	Sweat	4.86	2	14	(2) 20 x 17.5	1 x 0.866	3/8	Enhanced	None	65
MC36B4FH1										4F	65
MC36B4GH1										4G	65
MC36B4HH1										4H	65
MC36C3XH1	Cooling/ Heat Pump	Sweat	4.86	2	14	(2) 20 x 17.5	1 x 0.866	3/8	Enhanced	None	65
MC36C4FH1										4F	65
MC36C4GH1										4G	65
MC36C4HH1										4H	65
MC42B3XH1	Cooling/ Heat Pump	Sweat	5.83	2	14	(2) 24 x 17.5	1 x 0.866	3/8	Enhanced	None	72
MC42B4FH1										4F	72
MC42B4HH1										4H	72
MC42C3XH1	Cooling/ Heat Pump	Sweat	5.83	2	14	(2) 24 x 17.5	1 x 0.866	3/8	Enhanced	None	72
MC42C2CH1										2C	72
MC42C4FH1										4F	72
MC42C4HH1										4H	72
MC43B3XH1	Cooling/ Heat Pump	Sweat	4.86	3	12	(2) 20 x 17.5	1 x 0.866	3/8	Enhanced	None	73
MC43B4GH1										4G	73
MC43B4KH1										4K	73
MC43C3XH1	Cooling/ Heat Pump	Sweat	4.86	3	12	(2) 20 x 17.5	1 x 0.866	3/8	Enhanced	None	75
MC43C4GH1										4G	75
MC43C4KH1										4K	75
MC48C3XH1	Cooling/ Heat Pump	Sweat	5.35	3	12	(2) 22 x 17.5	1 x 0.866	3/8	Enhanced	None	82
MC48C4FH1										4F	82
MC48C4HH1										4H	82
MC48C4JH1										4J	82
MC48C4KH1										4K	82
MC48D3XH1	Cooling/ Heat Pump	Sweat	5.35	3	12	(2) 22 x 17.5	1 x 0.866	3/8	Enhanced	None	82
MC48D4FH1										4F	82
MC48D4HH1										4H	82
MC48D4JH1										4J	82
MC48D4KH1										4K	82
MC60D3XH1	Cooling/ Heat Pump	Sweat	5.83	3	12	(2) 24 x 17.5	1 x 0.866	3/8	Enhanced	None	86
MC60D4GH1										4G	86
MC60D4HH1										4H	86
MC60D4JH1										4J	86
MC60D4KH1										4K	86
MC62D3XH1	Cooling/ Heat Pump	Sweat	6.80	3	12	(2) 28 x 17.5	1 x 0.866	3/8	Enhanced	None	98
MC62D4HH1										4H	98
MC62D4JH1										4J	98
MC62D4KH1										4K	98

Note: MC coils available with a factory installed horizontal drain pan option (H).

ELECTRICAL DATA - 208/230-1-60

Model	Heater Model*	Max. Static	Min. Speed Tap	Total Heat[1]				KW Staging					
				kW		MBH		W1 Only		W2 Only		W1 + W2	
				208V	230V	208V	230V	208V	230V	208V	230V	208V	230V
MV12B	4HK*6500506	0.5	Heat-C	3.6	4.8	12.3	16.4	3.6	4.8	3.6	4.8	3.6	4.8
	4HK*6500806	0.5	Heat-C	5.6	7.5	19.2	25.6	2.8	3.75	5.6	7.5	5.6	7.5
	4HK*6501006	0.5	Heat-B	7.2	9.6	24.6	32.8	3.6	4.8	7.2	9.6	7.2	9.6
	4HK16501306	0.5	Heat B	9.8	13	33.3	44.4	3.3	4.3	6.5	8.7	9.8	13.0
	4HK165N1506	0.5	Heat-B	10.8	14.4	36.9	49.1	3.6	4.8	7.2	9.6	10.8	14.4
MV12D	4HK*6500506	0.5	Heat-C	3.6	4.8	12.3	16.4	3.6	4.8	3.6	4.8	3.6	4.8
	4HK*6500806	0.5	Heat-C	5.6	7.5	19.2	25.6	2.8	3.75	5.6	7.5	5.6	7.5
	4HK*6501006	0.5	Heat-B	7.2	9.6	24.6	32.8	3.6	4.8	7.2	9.6	7.2	9.6
	4HK16501306	0.5	Heat B	9.8	13	33.3	44.4	3.3	4.3	6.5	8.7	9.8	13.0
	4HK16501506	0.5	Heat-B	10.8	14.4	36.9	49.1	3.6	4.8	7.2	9.6	10.8	14.4
	4HK16501806	0.5	Heat-A	13.2	17.6	45.1	60.1	3.3	4.4	6.6	8.8	13.2	17.6
	4HK16502006	0.5	Heat-A	14.4	19.2	49.2	65.5	3.6	4.8	7.2	9.6	14.4	19.2
MV16C	4HK*6500506	0.5	Heat-D	3.6	4.8	12.3	16.4	3.6	4.8	3.6	4.8	3.6	4.8
	4HK*6500806	0.5	Heat-D	5.6	7.5	19.2	25.6	2.8	3.75	5.6	7.5	5.6	7.5
	4HK*6501006	0.5	Heat-C	7.2	9.6	24.6	32.8	3.6	4.8	7.2	9.6	7.2	9.6
	4HK16501306	0.5	Heat C	9.8	13	33.3	44.4	3.3	4.3	6.5	8.7	9.8	13.0
	4HK16501506	0.5	Heat-C	10.8	14.4	36.9	49.1	3.6	4.8	7.2	9.6	10.8	14.4
	4HK16501806	0.5	Heat-B	13.2	17.6	45.1	60.1	3.3	4.4	6.6	8.8	13.2	17.6
	4HK16502006	0.5	Heat-B	14.4	19.2	49.2	65.5	3.6	4.8	7.2	9.6	14.4	19.2
MV20D	4HK*6500506	0.5	Heat-C	3.6	4.8	12.3	16.4	3.6	4.8	3.6	4.8	3.6	4.8
	4HK*6500806	0.5	Heat-C	5.6	7.5	19.2	25.6	2.8	3.75	5.6	7.5	5.6	7.5
	4HK*6501006	0.5	Heat-C	7.2	9.6	24.6	32.8	3.6	4.8	7.2	9.6	7.2	9.6
	4HK16501306	0.5	Heat C	9.8	13	33.3	44.4	3.3	4.3	6.5	8.7	9.8	13.0
	4HK16501506	0.5	Heat-C	10.8	14.4	36.9	49.1	3.6	4.8	7.2	9.6	10.8	14.4
	4HK16501806	0.5	Heat-C	13.2	17.6	45.1	60.1	3.3	4.4	6.6	8.8	13.2	17.6
	4HK16502006	0.5	Heat-C	14.4	19.2	49.2	65.5	3.6	4.8	7.2	9.6	14.4	19.2
	4HK16502506	0.5	Heat-C	18.0	24.0	61.5	81.9	3.6	4.8	10.8	14.4	18.0	24.0

1. See conversion table on Page 8.
* May be 0 (no breaker) or 1 (with breaker).

ELECTRICAL DATA - 208/230-3-60

Models	Heat Kit - Three Phase	Max. Static	Min. Speed Tap	Total Heat[1]				KW Staging					
				kW		MBH		W1 Only		W2 Only		W1 + W2	
				208V	230V	208V	230V	208V	230V	208V	230V	208V	230V
MV12B	4HK06501025	0.5	Heat-B	7.2	9.6	24.6	32.8	7.2	9.6	7.2	9.6	7.2	9.6
MV12D	4HK06501025	0.5	Heat-B	7.2	9.6	24.6	32.8	7.2	9.6	7.2	9.6	7.2	9.6
	4HK06501525	0.5	Heat-B	10.8	14.4	36.9	49.1	10.8	14.4	10.8	14.4	10.8	14.4
	4HK06501825	0.5	Heat-A	12.9	17.2	44.7	58.7	12.9	17.2	12.9	17.2	12.9	17.2
MV16C	4HK06501025	0.5	Heat-C	7.2	9.6	24.6	32.8	7.2	9.6	7.2	9.6	7.2	9.6
	4HK06501525	0.5	Heat-C	10.8	14.4	36.9	49.1	10.8	14.4	10.8	14.4	10.8	14.4
	4HK06501825	0.5	Heat-B	12.9	17.2	44.7	58.7	12.9	17.2	12.9	17.2	12.9	17.2
MV20D	4HK06501025	0.5	Heat-C	7.2	9.6	24.6	32.8	7.2	9.6	7.2	9.6	7.2	9.6
	4HK06501525	0.5	Heat-C	10.8	14.4	36.9	49.1	10.8	14.4	10.8	14.4	10.8	14.4
	4HK16502525	0.5	Heat-C	18.0	24.0	61.4	81.4	9.0	12.0	18.0	24.0	18.0	24.0

1. See conversion table on Page 8.

ELECTRICAL DATA (FOR SINGLE SOURCE POWER SUPPLY) - COPPER WIRE 208/230-1-60

Model	Heater Model[1,*]	Field Wiring						
		Heater Amps 240V	Ampacity Min. Circuit		Max. O.C.P.[2] Amps/Type		Wire Size - AWG 75°C	
			208V	230V	208V	230V	208V	230V
MV12B	4HK*6500506	20.0	27.54	30.38	30	35	10	8
	4HK*6500806	31.3	39.73	44.50	40	45	8	8
	4HK*6501006	40.0	49.21	55.38	50	60	8	6
	4HK16501306	54.2	64.00	72.80	70	80	4	2
	4HK165N1506	60.0	70.88	80.38	90	90	4	3
MV12D	4HK*6500506	20.0	27.54	30.38	30	35	10	8
	4HK*6500806	31.3	39.73	44.50	40	45	8	8
	4HK*6501006	40.0	49.21	55.38	50	60	8	6
	4HK16501306	54.2	64.00	72.80	70	80	4	2
	4HK16501506	60.0	70.88	80.38	90	90	4	3
	4HK16501806	73.3	85.32	97.00	90	100	4	3
	4HK16502006	80.0	92.54	105.38	100	125	3	1
MV16C	4HK*6500506	20.0	29.29	31.88	30	35	10	8
	4HK*6500806	31.3	41.48	46.00	45	50	8	8
	4HK*6501006	40.0	50.96	56.88	60	60	6	6
	4HK16501306	54.2	66.40	75.20	70	80	4	2
	4HK16501506	60.0	72.63	81.88	90	90	3	3
	4HK16501806	73.3	87.07	98.50	90	100	3	2
	4HK16502006	80.0	94.29	106.88	100	125	3	1
MV20D	4HK*6500506	20.0	29.29	31.88	30	35	10	8
	4HK*6500806	31.3	41.48	46.00	45	50	8	8
	4HK*6501006	40.0	53.08	58.75	60	60	6	6
	4HK16501306	54.2	68.40	77.20	70	80	4	2
	4HK16501506	60.0	74.75	83.75	90	90	3	3
	4HK16501806	73.3	89.19	100.38	90	110	3	2
	4HK16502006	80.0	96.42	108.75	100	125	3	1
	4HK16502506	100.0	118.08	133.75	125	150	1	1/0

1. 30 kW 3 phase not approved for single source power supply.
2. OCP = Over Current Protection device, must be HACR type Circuit Breaker or Time Delay fuse.

* May be 0 (no breaker) or 1 (with breaker).

ELECTRICAL DATA (FOR SINGLE SOURCE POWER SUPPLY) - COPPER WIRE 208/230-3-60

Models	Heat Kit - Three Phase	Heater Amps 240V	Field Wiring					
			Min. Circuit Ampacity		Max. O.C.P.[1] Amps/Type		75°C Wire Size - AWG	
			208V	230V	208V	230V	208V	230V
MV12B	4HK06501025	23.1	30.9	34.3	35	35	8	8
MV12D	4HK06501025	23.1	30.9	34.3	35	35	8	8
	4HK06501525	34.7	43.4	48.8	45	50	8	8
	4HK06501825	41.4	50.6	57.1	50	60	8	6
MV16C	4HK06501025	23.1	32.6	35.1	35	35	8	8
	4HK06501525	34.7	45.1	49.6	45	50	8	8
	4HK06501825	41.4	52.4	58.0	60	60	6	6
MV20D	4HK06501025	23.1	34.8	37.6	35	40	8	8
	4HK06501525	34.7	47.3	52.1	50	60	8	6

1. O.C.P. = Over Current Protection device, must be HACR type Circuit Breaker or Time Delay fuse.

Electrical Data - (For Multi-Source Power Supply) - Copper Wire - 208/230-3-60

Models	Heater Model	Minimum Circuit Ampacity			Max. O.C.P.[1] Amps/Type			75°C Wire Size - AWG		
		Circuit								
		1st	2nd	3rd	1st	2nd	3rd	1st	2nd	3rd
		208/230	208/230	208/230	208/230	208/230	208/230	208/230	208/230	208/230
MV20D	4HK16502525	41.0/44.9	31.3/36.1	–	45/45	35/40	–	8/8	8/8	–

1. O.C.P. = Over Current Protection device, must be HACR type Circuit Breaker or Time Delay fuse.

ELECTRICAL DATA (FOR MULTI SOURCE POWER SUPPLY) - COPPER WIRE 208/230-1-60

Model	Heater Model	Min. Circuit Ampacity			Max. O.C.P.[1] Amps/Type			75°C Wire Size - AWG		
		Circuit			Circuit			Circuit		
		1st	2nd	3rd	1st	2nd	3rd	1st	2nd	3rd
		208/230	**208/230**	**208/230**	**208/230**	**208/230**	**208/230**	**208/230**	**208/230**	**208/230**
MV12B	4HK16501306	41.7/47.9	22.4/25.0	–	50/50	30/30	–	6/6	12/10	–
	4HK165N1506	49.2/55.4	21.7/25.0	–	50/60	25/25	–	8/6	10/10	–
MV12D	4HK16501306	41.7/47.9	22.4/25.0	–	50/50	30/30	–	6/6	12/10	–
	4HK16501506	49.2/55.4	21.7/25.0	–	50/60	25/25	–	8/6	10/10	–
	4HK16501806	45.6/51.2	39.7/45.8	–	50/60	40/50	–	8/6	8/8	–
	4HK16502006	49.2/55.4	43.3/50.0	–	50/60	45/50	–	8/6	8/8	–
MV16C	4HK16501306	42.9/49.1	23.6/26.2	–	50/50	30/30	–	6/6	12/10	–
	4HK16501506	51.0/56.9	21.7/25.0	–	50/60	25/25	–	8/6	10/10	–
	4HK16501806	17.3/52.7	39.7/45.8	–	50/60	40/50	–	8/6	8/8	–
	4HK16502006	51.0/56.9	43.3/50.0	–	50/60	45/50	–	8/6	8/8	–
MV20D	4HK16501306	43.9/50.1	24.6/27.2	–	50/60	30/30	–	6/6	10/10	–
	4HK16501506	53.1/58.8	21.7/25.0	–	60/60	25/25	–	6/6	10/10	–
	4HK16501806	49.5/54.6	39.7/45.8	–	50/60	40/50	–	8/6	8/8	–
	4HK16502006	53.1/58.8	43.3/50.0	–	60/60	45/50	–	6/6	8/8	–
	4HK16502506	49.3/56.5	43.3/50.0	21.7/25.0	50/60	45/50	25/25	8/6	8/8	10/10

1. OCP = Over Current Protection device, must be HACR type Circuit Breaker or Time Delay fuse.

KW & MBH CONVERSIONS

FOR	208-VOLT	OPERATION MULTIPLY	240-VOLT	TABULATED KW & MBH BY	.751
	230-VOLT		240-VOLT		.918

ELECTRICAL DATA - COOLING UNIT ONLY (60 Hz)

MODEL	Total Motor Amps		Minimum Circuit Ampacity		Max. O.C.P.[1] Amps/Type	Minimum Wire Size AWG @ 75°C
	60 Hertz		60 Hertz			
	208V	230V	208V	230V		
MV12B	4.7	4.3	5.9	5.4	15	14
MV12D	4.7	4.3	5.9	5.4	15	14
MV16C	6.1	5.0	7.6	6.9	15	14
MV20D	7.8	7.0	9.7	8.8	15	14

1. OCP = Over Current Protection device, must be HACR type Circuit Breaker or Time Delay fuse.

POWER WIRING

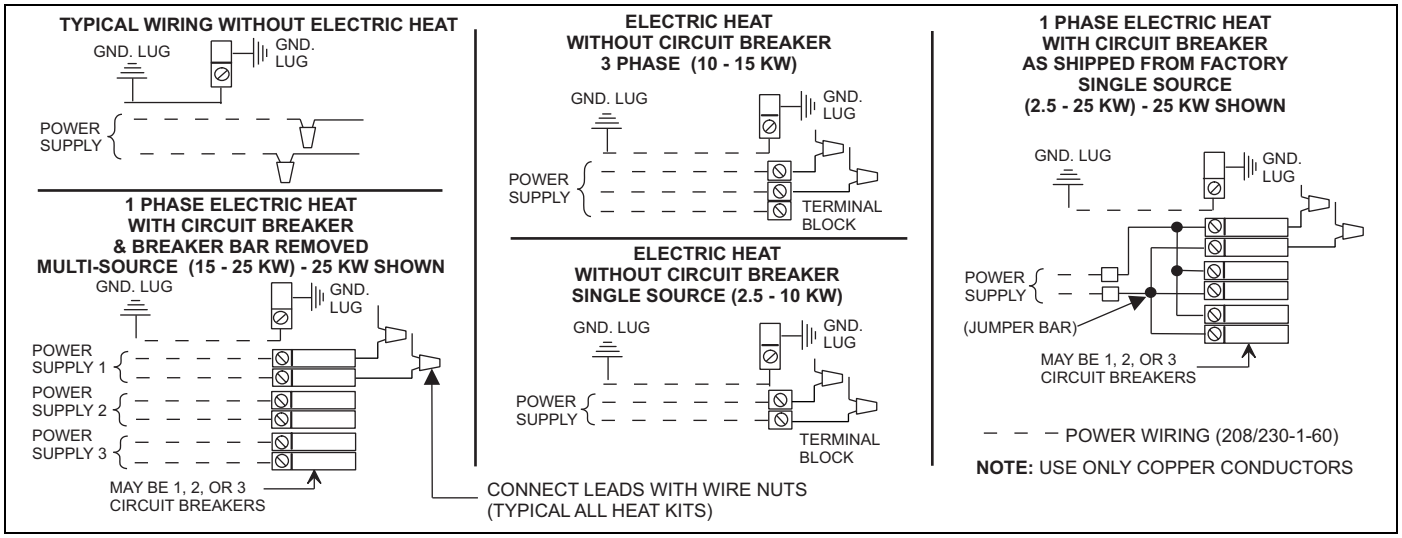

ACCESSORIES

Refer to Price Manual for specific model numbers.

Electric Heaters - Models shown under Electrical Data include sequencers and temperature limit switches and fusible links for safe, efficient operation. Circuit breakers are provided where shown.

Suspension Kit - Suspension Kit Model 1BH0601 is designed specifically for upflow application of the units contained in this technical guide. For suspension of these units in horizontal applications, it is recommended to use angle support brackets with threaded rods at locations shown in air handler installation instructions.

Filter Rack - One of the following external filter rack accessories: 1FR07* or 1FR08* must be used when unit is installed for application outlined.

Combustible Floor Base - If an electric heat accessory which is rated for greater than zero clearance to combustible surfaces is installed in these air handlers in the downflow operating positions on a combustible floor, one of the following combustible floor base accessories is required: 1FB1817, 1FB1821, or 1FB1824.

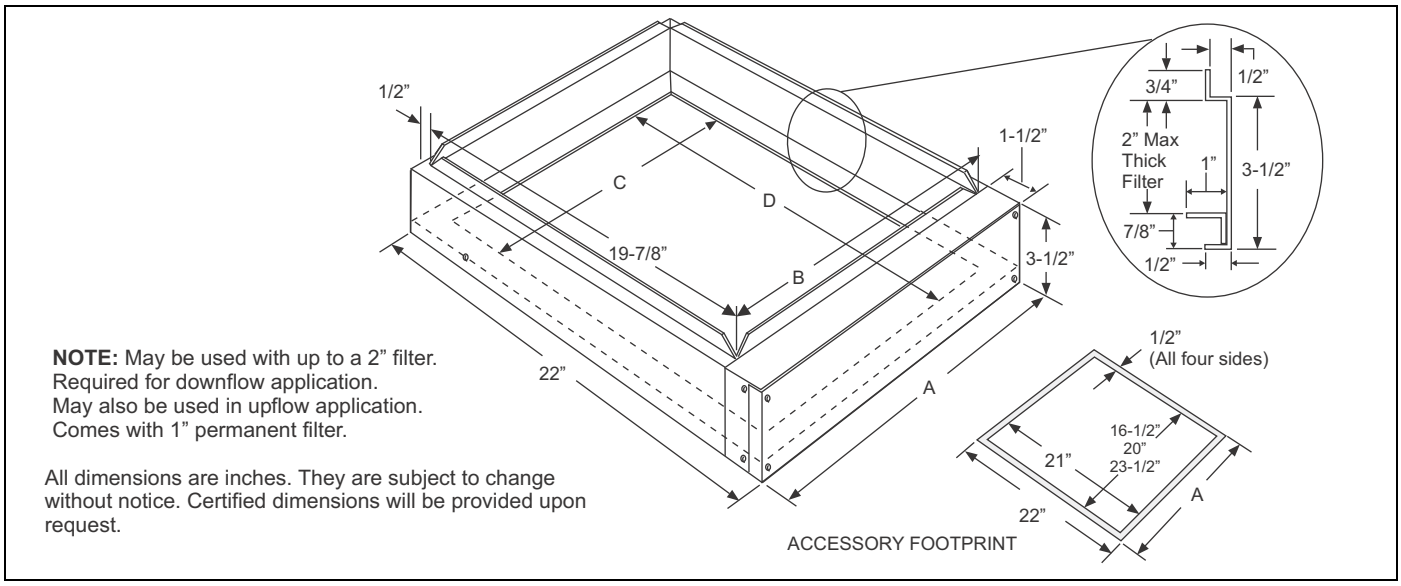

FILTER RACK ACCESSORY

DIMENSIONS

Filter Rack Model		Used With	Rack Dimensions Inches				Filter Dimensions Inches		
Multi-Position	Horizontal Only		A	B	C	D	Width	Length	Thickness
1FR0817	1FR0717	MV12B	17-1/2	16-3/8	15-1/2	21	16	20	1
1FR0821	1FR0721	MV16C	21	19-7/8	19	21	20	20	1
1FR0824	1FR0724	MV12D, MV20D	24-1/2	23-3/8	22-1/2	21	24	20	1

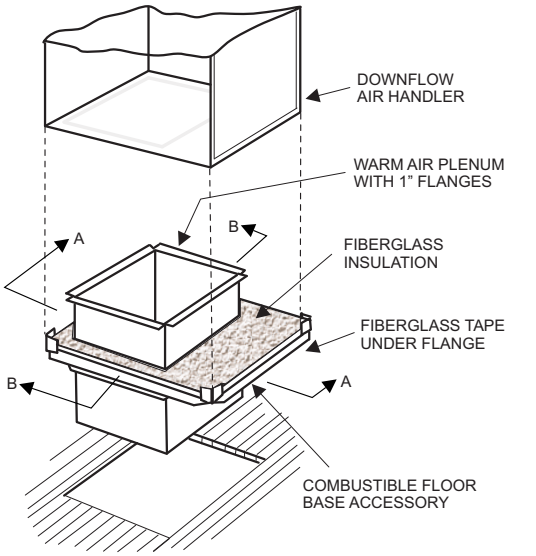

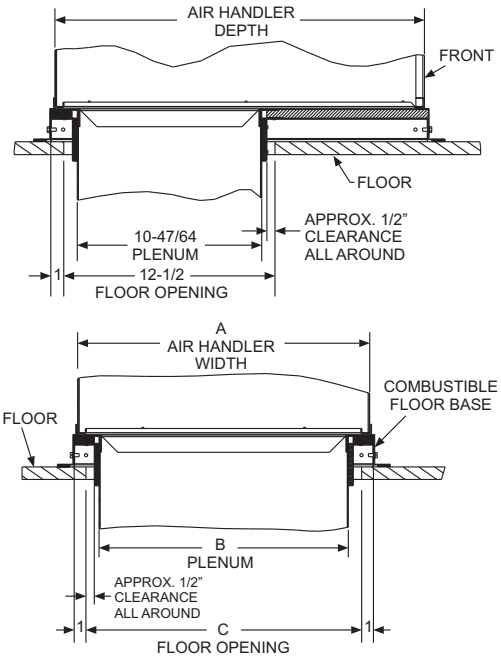

All dimensions are in inches. They are subject to change without notice.
Certified dimensions will be provided upon request.

COMBUSTIBLE FLOOR BASE ACCESSORY

DIMENSIONS

Floor Base Model	Used with	Dimensions			
		A	B	C	D
1FB1817	MV12B	19.9	18.0	14.9	16.9
1FB1821	MV16C	23.4	21.5	18.4	20.4
1FB1824	MV12D, MV20D	26.9	25.0	21.9	23.9

APPLICATION FACTORS - Rated CFM vs. Actual CFM

% OF RATED AIR FLOW	80%	90%	RATED CFM	110%	120%
CAPACITY FACTOR	0.96	0.98	1.00	1.02	1.03

TYPICAL APPLICATIONS WITH MC MULTI-POSITION COILS

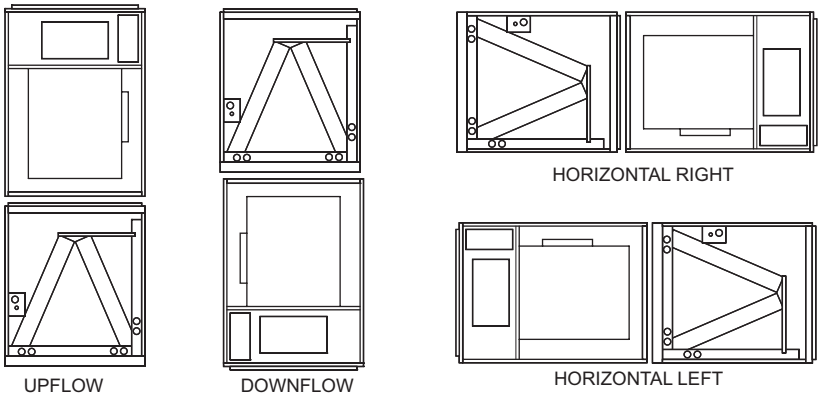

CONVENTIONAL CONTROL WIRING (24 VAC)

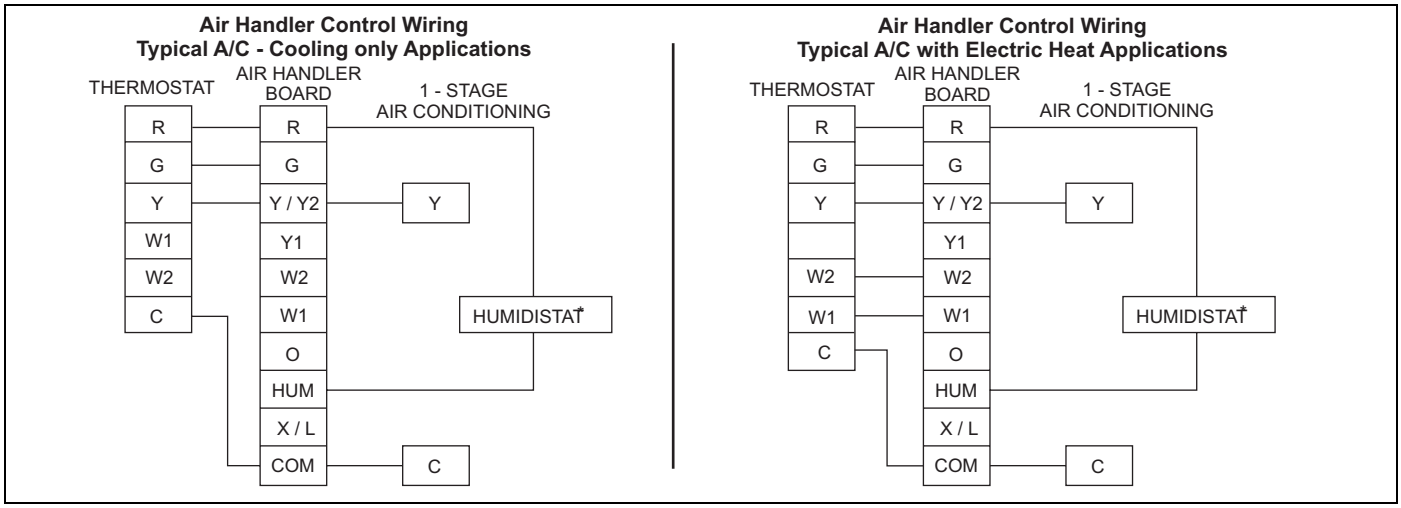

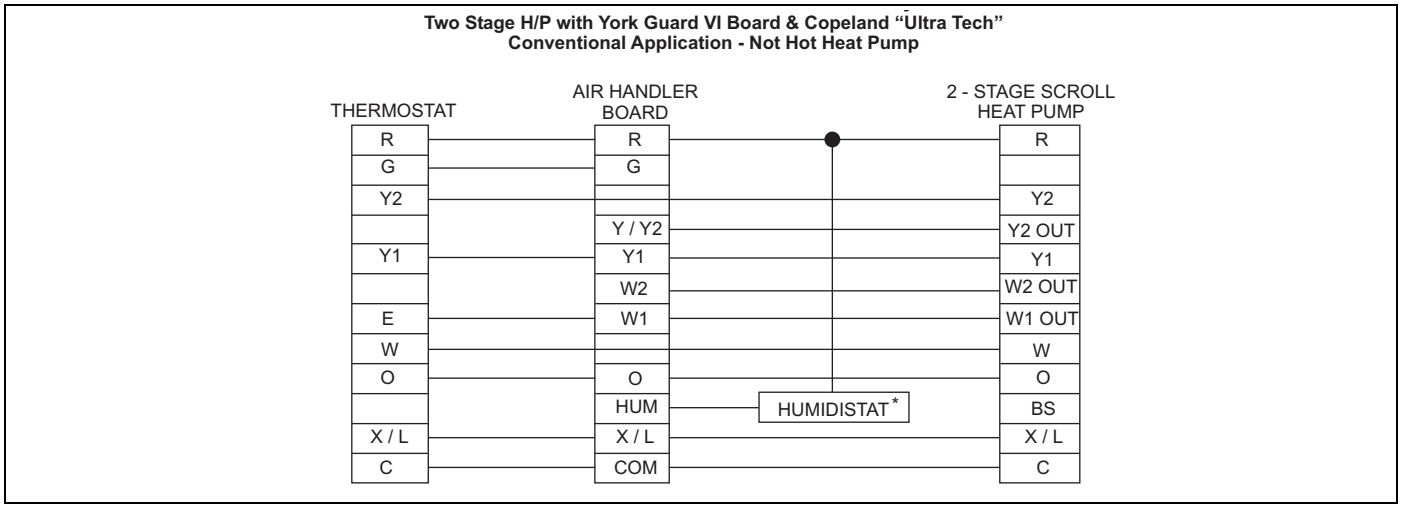

* Optional dehumidification humidistat switch contacts open on humidity rise.

CONTROL WIRING USING COMMUNICATION

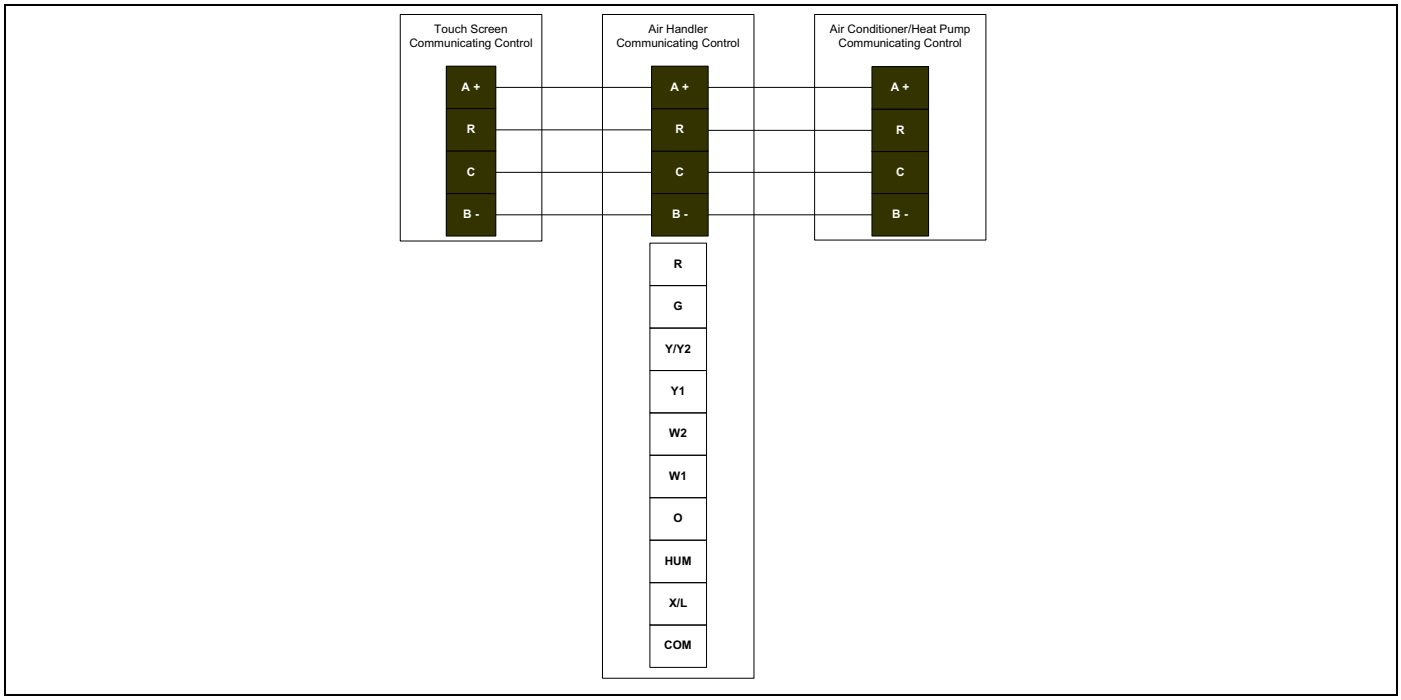

AIR HANDLER AIR FLOW DATA

HIGH/LOW SPEED COOLING AND HEAT PUMP AIRFLOW					
CFM				JUMPER SETTINGS	
12B		12D			
High	Low	High	Low	COOL Tap	ADJ Tap
1385	896	1411	907	A	B
1137	745	1159	767	B	B
1203	777	1227	799	A	A
1019	650	1007	662	B	A
1085	690	1083	716	A	C
943	615	958	629	C	B
889	585	908	603	B	C
746	493	767	537	D	B
817	537	840	568	C	A
646	467	660	516	D	A
738	481	780	532	C	C
580	465	603	517	D	C
16C		20D		JUMPER SETTINGS	
High	Low	High	Low	COOL Tap	ADJ Tap
2005	1433	2404	1579	A	B
1768	1145	2022	1313	B	B
2009	1299	2167	1388	A	A
1615	1040	1801	1159	B	A
1787	1159	1924	1256	A	C
1524	988	1818	1175	C	B
1445	940	1620	1024	B	C
1350	883	1638	1049	D	B
1384	906	1628	1030	C	A
1215	800	1442	929	D	A
1236	810	1434	911	C	C
1086	716	1305	859	D	C

HIGH/LOW SPEED ELECTRIC HEAT AIRFLOW					
CFM				JUMPER SETTINGS	
12B		12D			
High	Low	High	Low	HEAT Tap	ADJ Tap
1385	900	1411	913	A	N/A
1228	795	1258	817	B	N/A
1137	748	1159	769	C	N/A
917	603	928	619	D	N/A
16C		20D		JUMPER SETTINGS	
High	Low	High	Low	HEAT Tap	ADJ Tap
2006	1411	2408	1515	A	N/A
1868	1243	2218	1285	B	N/A
1468	983	1902	1070	C	N/A
1248	840	1407	823	D	N/A

1. Airflow at nominal voltage, bottom return at 0.5 external static pressure, tested without filter installed, dry coil conditions.
2. These units have variable speed motors that automatically adjust to provide constant CFM from 0.0” to 0.6” w.c. static pressure.
3. From 0.6” to 1.0” static pressure, CFM is reduced by 2% per 0.1” increase in static.
4. Operation on duct systems with greater than 1.0” w.c. external static pressure is not recommended.
5. Both the COOL and the ADJUST tap must be set to obtain the cooling airflow desired (CFM).
6. The ADJ tap does not affect the HEAT tap setting.
7. Low speed cooling used only with two stage outdoor units. (Speed is preset to 65% of high speed).
8. Dehumidification speed is 85% of jumper selected COOL tap and ADJUST tap.
9. When operating in both heat pump and electric heat modes, the airflow (CFM) will be per HEAT Tap CFM values only.
10. At some settings, LOW COOL and/or LOW HEAT airflow may be lower than what is required to operate an airflow switch on certain models of electronic air cleaners. Consult the instructions for the electronic air cleaner for further details.
11. Airflow (CFM) indicator light (LED2) flashes once for every 100 CFM (i.e.: 12 Flashes is 1200 CFM) – blinks are approximate +/- 10% of actual CFM.

Subject to change without notice. Published in U.S.A.
Copyright © 2010 by Johnson Controls, Inc. All rights reserved.

550570-BTG-C-1010
Supersedes: 550570-BTG-B-0210

Johnson Controls Unitary Products
5005 York Drive
Norman, OK 73069