YORK®
Heating and Air Conditioning

TECHNICAL GUIDE

HORIZONTAL DISCHARGE SPLIT SYSTEM AIR CONDITIONERS

13 SEER – R-410A – 1 PHASE

1.5 THRU 5 NOMINAL TONS

MODELS: TCHD18 THRU 60

AHRI CERTIFIED™ www.ahridirectory.org Unitary Small AC AHRI Standard 210/240 Certification applies only when the complete system is listed with AHRI.

ISO 9000 REGISTRATION
ISO 9001 Certified Quality Management System

C US

LIMITED WARRANTY TO CONSUMERS Good Housekeeping Promises REPLACEMENT OR REFUND IF DEFECTIVE

Due to continuous product improvement, specifications are subject to change without notice.

Visit us on the web at
www.upgnet.com and www.york.com

Additional rating information can be found at
www.ahridirectory.org

WARRANTY SUMMARY*

Extended 10-Years limited parts warranty.
Standard 10-Years limited compressor warranty.

Extended 10-Years limited parts warranty requires online registration within 90 days of purchase for replacement or closing for new home construction.

*Does not apply to R-22 models, 3-Phase models, or internet sales.
See Limited Warranty certificate in User's Information Manual for details.

DESCRIPTION

The 13 SEER Series condensing unit is the outdoor part of a versatile system of air conditioning. It is designed to be custom-matched with one of UPG's complete line of evaporator sections, with each serving a specific function. Matching Air Handlers are available for upflow, downflow, or horizontal applications to provide a complete system. Electric Heaters are available, if required. Add-On coils are available for use with upflow, downflow, or horizontal furnaces and air handlers.

FEATURES

- **Performance** - Efficiency levels from 13.0 SEER/11.0 EER with a loose coil up to 16.0 SEER/14.0 EER (some models) when coupled with an ECM indoor blower.
- **Small Footprint** - Compact "slim-line" design allows for easy installation in tight spaces. Units can be stacked two-high with approved stacking kit.
- **QuietDrive™ System** - The combination of a swept-wing fan, rigid base pan, isolated compressor compartment, and quiet scroll compressor reduce sound to as low as 69 dBA.
- **Low Operating Sound Levels** - The swept-wing condenser fan in blow-through configuration provides for whisper-quiet operation by allowing air to flow smoothly and efficiently across the fan tips.
- **Quality Condenser Coils** - The coil is constructed of aluminum microchannel tubing and enhanced aluminum fins for compact size and increased efficiency.
- **Environmentally Friendly Refrigerant** - The next generation refrigerant R-410A delivers environmentally friendly performance with zero ozone depletion.
- **Durable Cabinet** - Heavy-gage steel cabinet and tubular base rails provide added support.
- **Aesthetic** - Powder paint "Champagne" color provides an attractive retail finish.
- **Commercial Applications** - The TCHD 3 Phase Series is also available in 208/230-3-60 and 460-3-60 voltages in the 2½, 3, 4, & 5 ton models.
- **Other Features:**
- Factory supplied filter drier
- High pressure switch, low pressure switch
- Accumulator and crankcase heater in all sizes
- Up to 200' line set out of the box
- Zero lot line - only 6" minimum clearance from structure
- **Agency Listed** - Safety certified by CSA to UL 1995 / CSA 22.2. Performance certified to ANSI/AHRI Standard 210/240 in accordance with the Unitary Small Equipment certification program.

Physical and Electrical Data

MODEL		TCHD18 S41S3	TCHD24 S41S3	TCHD30 S41S3	TCHD36 S41S3	TCHD48 S41S3	TCHD60 S41S3
Unit Supply Voltage		208-230V, 1ϕ, 60Hz					
Normal Voltage Range [1]		187 to 252					
Minimum Circuit Ampacity		11.8	17.4	17.5	23.1	27.1	34.3
Max. Overcurrent Device Amps [2]		20	30	30	40	45	60
Min. Overcurrent Device Amps [3]		15	20	20	25	30	35
Multi-Stage Compressor		No	No	No	No	No	No
Compressor Type		Scroll	Scroll	Scroll	Scroll	Scroll	Scroll
Compressor Amps	Rated Load	9.0	13.5	12.8	17.3	20.5	26.3
	Locked Rotor	48.0	58.3	64.0	96.7	115.0	134.0
Crankcase Heater		Yes	Yes	Yes	Yes	Yes	Yes
Factory External Discharge Muffler		No	No	No	No	No	No
Factory External Check Valve		No	No	No	No	No	No
HS Kit Required with TXV [4]		No	No	No	No	No	No
Fan Diameter Inches		17.5	17.5	23	23	23	23
Fan Motor	Rated HP	1/8	1/8	1/4	1/4	1/4	1/4
	Rated Load Amps	0.60	0.60	1.45	1.45	1.45	1.45
	Nominal RPM	840	840	850	850	850	850
Coil	Face Area Sq. Ft.	5.76	5.76	11.96	11.96	13.96	13.96
	Rows Deep	1	1	1	1	1	1
	Fins / Inch	23	23	23	23	23	23
Refrigerant Lines[5]	Max. Length	200	200	200	200	200	200
	Max. Lift	65	65	65	65	65	65
	Max. Drop	150	150	150	150	150	150
	Liquid Line Set OD (Field Installed)	3/8	3/8	3/8	3/8	3/8	3/8
	Vapor Line Set OD (Field Installed)	3/4	3/4	3/4	3/4	7/8	7/8
Unit Charge (Lbs. - Oz.) [6]		2 - 14	3 - 5	4 - 0	4 - 8	5 - 5	5 - 6
Charge Per Foot, Oz.		0.68	0.68	0.68	0.68	0.70	0.70
Operating Weight Lbs.		130	135	195	215	240	250

1. Rated in accordance with AHRI Standard 110-2012, utilization range “A”.
2. Dual element fuses or HACR circuit breaker. Maximum allowable overcurrent protection.
3. Dual element fuses or HACR circuit breaker. Minimum recommended overcurrent protection.
4. See Hard Start Kit Accessory Installation Manual for Hard Start Kit part number for each model.
5. When more than 50 feet of interconnecting tubing and more than 30 feet of vertical lift is used, consult the Application Data (part number 247077). For long-line applications, interconnecting lines over 100 feet must be installed with liquid line solenoid.
6. The Unit Charge is correct for the outdoor unit, smallest matched indoor unit, and 15 feet of refrigerant tubing. For tubing lengths other than 15 feet, add or subtract the amount of refrigerant, using the difference in length multiplied by the per foot value.

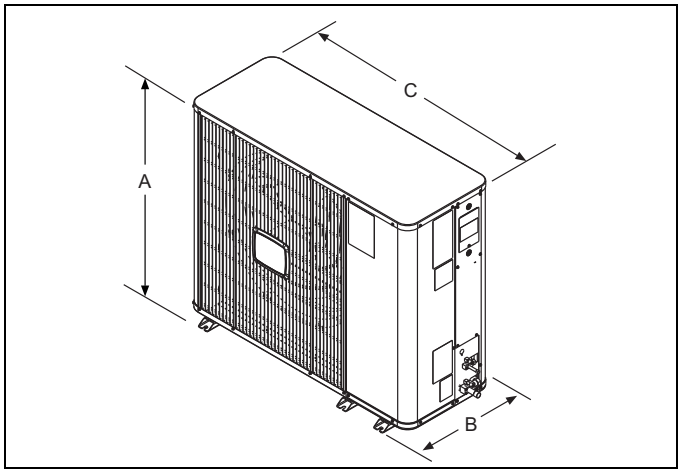

Unit Model	Dimensions (Inches)			Refrigerant Connection Service Valve Size	
	A	B	C	Liquid	Vapor
18	25-1/4	17-1/2	37-1/4	3/8	3/4
24	25-1/4	17-1/2	37-1/4		
30	37-1/4	20	45		
36	37-1/4	20	45		
48	43-1/4	20	45		7/8
60	43-1/4	20	45		

All dimensions are in inches and are subject to change without notice.
Overall height is from bottom of mounting feet to top of unit.
Overall length and width include mounting feet and screw heads.

System Charge for Various Matched Systems						
Outdoor Unit	TCHD18S41S3	TCHD24S41S3	TCHD30S41S3	TCHD36S41S3	TCHD48S41S3	TCHD60S41S3
Required TXV [1,2]	4F1	4F1	4G1	4G1	4J1	4K1
Indoor Unit [3,4,5]	**Additional Charge, Oz**					
AHE18B	4	–	–	–	–	–
AHE24B	17	14	–	–	–	–
AHE30B	17	14	10	–	–	–
AHE36C	24	20	16	12	–	–
AHE42D	–	32	27	22	–	–
AHE48D	–	–	–	–	11	–
AHE60D	–	–	–	–	16	13
AHR18B	4	–	–	–	–	–
AHR24B	–	14	–	–	–	–
AHR30B	–	–	10	–	–	–
AHR36B	–	–	16	12	–	–
AHR42C	–	–	–	22	–	–
AHR48D	–	–	–	–	11	–
AHR60D	–	–	–	–	16	–
AHV18B	0	–	–	–	–	–
AHV24B	13	9	–	–	–	–
AHV30B	14	9	0	–	–	–
AHV36C	21	16	7	0	–	–
AHV42D	–	–	18	11	–	–
AHV48D	–	–	–	10	0	–
AHV60D	–	–	–	–	4	0
AV*24	6	2	–	–	–	–
AV*36	24	20	16	12	–	–
AV*48	–	–	–	22	11	–
AV*60	–	–	–	–	11	8
FC/MC/PC18	4	–	–	–	–	–
FC/MC/PC24	4	0	–	–	–	–
FC/MC/PC32	17	14	10	6	–	–
FC/MC/PC35	17	14	0	6	–	–
FC/MC/PC37	24	21	16	12	–	–
FC/MC/PC43	–	20	16	12	–	–
FC/MC/PC48	–	32	27	22	0	–
FC/MC/PC60	–	–	–	–	10	–
FC/MC62	–	–	–	–	16	0
FC64	–	–	–	–	25	11
HD24	26	17	–	–	–	–
HD36	32	20	14	11	–	–
HD48	–	–	–	33	24	–
HD60	–	–	–	–	30	22
UC18	5	–	–	–	–	–
UC24	9	5	–	–	–	–
UC48	–	25	21	17	6	–
UC60	–	–	–	–	11	–
Some of the combinations shown in the above System Charge table require Advanced Main Air Circulating Fan indoor product. For approved coil only matches, please see the “COOLING CAPACITY - Upflow, Downflow & Horizontal Furnaces and Coils” table.						

FOOTNOTES:

1. For applications requiring a TXV use S1-1TVM*** series kit.
2. A TXV kit must be used with these indoor units to obtain system performance.
3. Systems matched with furnaces or air handlers not equipped with blower-off delays may require blower Time Delay Kit S1-2FD06700224.
4. PC coils cannot be used in downflow or horizontal applications. FC coils cannot be used in horizontal applications.
5. Refer to Cooling Performance Data tables for actual performance for specified system matches.

PROCEDURES:

1. Unit factory charge listed on the unit nameplate includes refrigerant for the outdoor unit, the smallest matched indoor unit, and 15 feet of interconnecting line tubing.
2. Verify the TXV and additional charge required for specific matched indoor unit in the system using the above table.
3. Add additional charge for the amount of interconnecting line tubing greater than 15 feet at the rate specified in Physical and Electrical Data Table.
4. For indoor matches requiring additional charge, the refrigerant needs to be weighed in for specific matched indoor unit and lineset length.
5. Permanently mark the unit nameplate with the total system charge. Total System Charge = Base Charge (as shipped) + charge adder for matched indoor unit + charge adder for line set.

COOLING CAPACITY - With Air Handler Coils

UNIT MODEL	AIR HANDLER		COIL MODEL[1]	COOLING				
	MODEL	WIDTH		RATED CFM	NET MBH TOTAL	NET MBH SENS.	SEER	EER
13 SEER AC WITH AIR HANDLERS								
TCHD18S41S3	AHE18B	17.5	–	610	18.1	12.8	14.50	12.00
	AHE24B	17.5	–	585	18.3	13.0	14.75	12.25
	AHE30B	17.5	–	585	18.3	13.0	14.75	12.25
	AHE36C	21.0	–	730	19.4	14.6	15.25	12.75
	AHR18B	17.5	–	665	17.9	12.8	13.00	11.00
	AHV18B	17.5	–	615	18.0	12.7	14.25	11.50
	AHV24B	17.5	–	580	18.2	12.8	14.50	11.75
	AHV30B	17.5	–	700	18.4	13.8	14.50	11.75
	AHV36C	21.0	–	670	18.6	13.7	15.00	12.00
	AV*24	17.5	–	610	18.1	13.1	14.25	11.50
	AV*36	21.0	–	630	19.0	13.8	15.00	12.00
	MV12B	17.5	FC/MC24B	600	18.4	12.9	14.50	12.15
	MV12B	17.5	FC/MC35B	600	18.3	13.1	14.50	12.00
	MX12B	17.5	FC/MC24B	645	18.6	13.6	15.25	12.50
	MX12B	17.5	FC/MC35B	660	18.9	13.8	15.25	12.75
TCHD24S41S3	AHE24B	17.5	–	795	23.8	17.5	14.75	12.25
	AHE30B	17.5	–	795	23.8	17.5	14.75	12.25
	AHE36C	21.0	–	855	24.4	18.5	15.25	12.50
	AHE42D	24.5	–	820	24.2	18.3	15.25	12.75
	AHR24B	17.5	–	740	23.2	16.6	13.00	11.00
	AHV24B	17.5	–	710	23.4	16.7	14.00	11.75
	AHV30B	17.5	–	775	23.6	17.3	14.25	11.75
	AHV36C	21.0	–	760	24.0	17.6	14.50	12.00
	AV*24	17.5	–	800	23.2	17.1	14.25	11.75
	AV*36	21.0	–	725	23.8	17.1	14.50	12.25
	MV12B	17.5	FC/MC24B	800	23.6	17.2	14.65	12.25
	MV12B	17.5	FC/MC35B	800	23.6	17.3	14.85	12.20
	MV12B	17.5	FC/MC43B	800	24.2	17.7	15.00	12.45
	MV12D	24.5	FC/MC48D	845	24.6	18.6	15.25	12.75
	MV16C	21.0	FC/MC35C	800	23.6	17.3	14.85	12.20
	MV16C	21.0	FC/MC43C	800	24.2	17.7	15.05	12.55
	MX12B	17.5	FC/MC24B	780	23.6	17.3	15.00	12.50
	MX12B	17.5	FC/MC35B	815	24.0	17.7	15.25	12.75
	MX12B	17.5	FC/MC43B	735	23.8	17.3	15.00	12.50
	MX12D	24.5	FC/MC48D	850	24.6	18.8	15.50	12.75
TCHD30S41S3	AHE30B	17.5	–	985	28.4	21.2	14.75	13.00
	AHE36C	21.0	–	1000	29.0	21.8	15.50	13.50
	AHE42D	24.5	–	1000	29.4	22.2	16.00	14.00
	AHR30B	17.5	–	1065	28.2	21.8	13.50	12.00
	AHR36B	17.5	–	1060	28.6	21.8	13.50	12.00
	AHV30B	17.5	–	1000	28.2	20.9	14.00	12.25
	AHV36C	21.0	–	895	28.6	20.7	15.00	13.00
	AHV42D	24.5	–	1080	29.6	22.9	15.50	13.25
	AV*36	21.0	–	960	28.8	21.3	15.50	13.25
	MV12B	17.5	FC/MC35B	1000	28.6	21.2	15.00	13.20
	MV12B	17.5	FC/MC43B	1000	29.0	21.6	15.15	13.35
	MV16C	21.0	FC/MC35C	1000	28.6	21.2	15.00	13.25
	MV16C	21.0	FC/MC43C	1000	29.0	21.6	15.35	13.50
	MV16C	21.0	FC/MC48C	1000	29.4	21.8	15.50	13.70
	MX12B	17.5	FC/MC35B	1085	28.8	22.2	15.00	13.25
	MX12B	17.5	FC/MC43B	1095	29.2	22.8	15.25	13.50
	MX16C	21.0	FC/MC35C	1035	28.8	21.6	15.75	13.75
	MX16C	21.0	FC/MC43C	970	29.0	22.0	15.75	13.75
	MX16C	21.0	FC/MC48C	995	29.4	22.0	16.00	14.00

For notes see Page 5.

COOLING CAPACITY - With Air Handler Coils (Continued)

UNIT MODEL	AIR HANDLER		COIL MODEL[1]	COOLING				
	MODEL	WIDTH		RATED CFM	NET MBH		SEER	EER
					TOTAL	SENS.		
13 SEER AC WITH AIR HANDLERS								
TCHD36S41S3	AHE36C	21.0	–	1190	34.4	25.4	14.75	12.75
	AHE42D	24.5	–	1180	35.0	25.8	15.50	13.25
	AHR36B	17.5	–	1245	33.8	24.6	13.25	11.50
	AHR42C	21.0	–	1230	34.6	25.6	13.75	12.00
	AHV36C	21.0	–	1215	34.4	25.6	14.50	12.00
	AHV42D	24.5	–	1180	35.0	25.8	15.00	12.75
	AHV48D	24.5	–	1155	34.4	25.2	15.00	12.50
	AV*36	21.0	–	1190	34.6	25.4	14.80	12.75
	AV*48	24.5	–	1220	32.8	24.2	14.00	12.15
	MV12B	17.5	FC/MC43B	1200	34.4	25.2	14.50	12.50
	MV12D	24.5	FC/MC48D	1150	34.6	25.2	15.00	13.00
	MV16C	21.0	FC/MC43C	1200	34.6	25.4	15.00	13.00
	MV16C	21.0	FC/MC48C	1200	35.0	25.6	15.25	13.10
	MX12B	17.5	FC/MC43B	1220	34.4	25.8	14.50	12.50
	MX12D	24.5	FC/MC48D	1225	35.2	26.2	15.25	13.00
	MX16C	21.0	FC/MC43C	1140	34.4	25.2	15.25	13.00
	MX16C	21.0	FC/MC48C	1150	35.0	25.6	15.50	13.25
TCHD48S41S3	AHE48D	24.5	–	1600	47.0	34.0	14.00	12.00
	AHE60D	24.5	–	1565	48.0	34.4	14.25	12.25
	AHR48D	24.5	–	1610	47.0	34.0	13.00	11.50
	AHR60D	24.5	–	1620	47.5	34.4	13.25	11.50
	AHV48D	24.5	–	1585	46.5	33.2	13.50	11.50
	AHV60D	24.5	–	1570	47.0	34.0	13.75	11.75
	AV*48	24.5	–	1625	46.5	33.8	13.75	11.75
	AV*60	24.5	–	1560	47.0	34.0	13.75	11.75
	MV16C	21.0	FC/MC48C	1600	47.5	34.2	14.00	12.10
	MV16C	21.0	FC60C	1625	47.0	33.6	13.75	11.75
	MV20D	24.5	FC/MC48D	1600	47.5	34.2	14.00	12.00
	MV20D	24.5	FC/MC60D	1600	45.5	33.0	13.50	11.60
	MV20D	24.5	FC/MC62D	1600	48.0	34.6	14.25	12.25
	MV20D	24.5	FC64D	1630	49.5	36.0	14.50	12.50
	MX16C	21.0	FC/MC48C	1685	47.5	34.6	14.00	12.00
	MX16C	21.0	FC60C	1630	47.5	33.8	14.25	12.25
	MX20D	24.5	FC/MC48D	1525	47.5	33.8	14.25	12.25
	MX20D	24.5	FC/MC60D	1585	47.5	33.8	14.50	12.25
	MX20D	24.5	FC/MC62D	1605	48.5	35.2	14.75	12.50
	MX20D	24.5	FC64D	1605	49.5	36.2	15.00	13.00
TCHD60S41S3	AHE60D	24.5	–	1835	57.5	40.5	13.50	11.50
	AHV60D	24.5	–	1635	56.5	38.3	13.25	11.00
	AV*60	24.5	–	1730	56.0	37.7	13.25	11.00
	MV20D	24.5	FC/MC62D	1800	57.5	39.5	13.40	11.30
	MV20D	24.5	FC64D	1855	59.0	41.5	13.50	11.50
	MX20D	24.5	FC/MC62D	1795	58.0	40.5	13.75	11.75
	MX20D	24.5	FC64D	1795	59.5	42.0	14.00	11.75

Rated in accordance with DOE test procedures (Federal Register 12-27-79 and 3-18-88) and ANSI/AHRI Standard 210/240.
Cooling MBH based on 80°F entering air temperature, 50% RH (Relative Humidity), and rated air flow.
EER (Energy Efficiency Ratio) is the total cooling output in BTUs at 95°F outdoor ambient divided by the total electric power in watt-hours at those conditions.
SEER (Seasonal Energy Efficiency Ratio) is the total cooling output in BTUs during a normal annual usage period for cooling divided by the total electric power input in watt-hours during the same period.

1. MC coils available with a factory installed horizontal drain pan. See price pages for specific model number.

— = Not applicable.

MA Modular Air Handlers use Coil Only Ratings.

COOLING CAPACITY - Upflow, Downflow & Horizontal Furnaces and Coils (Coil Only Ratings)

UNIT MODEL	COIL		CFM RANGE (MIN.-MAX.)	COOLING				
	MODEL	WIDTH		RATED CFM	NET MBH		SEER[1]	EER
					TOTAL	SENS.		
13 SEER AC COIL ONLY RATINGS								
TCHD18S41S3	FC/MC/PC24	14.5,17.5	450-750	600	18.0	12.6	13.00	11.00
	FC/MC/PC32	14.5	450-750	600	18.1	12.6	13.00	11.05
	FC/MC/PC35	17.5,21.0	450-750	600	18.1	12.6	13.00	11.05
	FC/MC/PC37	14.5	450-750	600	18.4	12.7	13.10	11.25
	HD24	–	450-750	600	18.7	12.9	13.25	11.35
	UC24	14.5,17.5	450-750	600	18.0	12.5	13.00	11.00
TCHD24S41S3	FC/MC/PC24	14.5,17.5	600-1000	800	23.0	16.8	13.00	11.00
	FC/MC/PC32	14.5	600-1000	800	23.0	16.9	13.15	11.00
	FC/MC/PC35	17.5,21.0	600-1000	800	23.0	16.9	13.15	11.00
	FC/MC/PC37	14.5	600-1000	800	23.6	17.3	13.30	11.20
	FC/MC/PC43	17.5,21.0	600-1000	800	23.6	17.3	13.30	11.20
	FC/MC/PC48	21.0,24.5	600-1000	800	23.6	17.4	13.25	11.00
	UC24	14.5,17.5	600-1000	800	23.0	16.9	13.00	11.00
TCHD30S41S3	FC/MC/PC32	14.5	800-1200	1000	28.0	20.8	13.50	12.00
	FC/MC/PC35	17.5,21.0	800-1200	1000	28.0	20.8	13.50	12.00
	FC/MC/PC37	14.5	800-1200	1000	28.4	21.2	13.70	12.20
	FC/MC/PC43	17.5,21.0	800-1200	1000	28.4	21.2	13.70	12.20
	FC/MC/PC48	21.0,24.5	800-1200	1000	28.6	21.4	13.75	12.25
	HD36	–	800-1200	1000	27.6	20.0	13.30	11.85
	UC48	21.0,24.5	800-1200	1000	26.8	20.0	13.00	11.50
TCHD36S41S3	FC/MC/PC37	14.5	1000-1400	1200	33.8	24.8	13.50	11.70
	FC/MC/PC43	17.5,21.0	1000-1400	1200	33.8	24.7	13.50	11.70
	FC/MC/PC48	21.0,24.5	1000-1400	1200	34.4	25.2	13.65	12.00
	HD48	–	1000-1400	1200	34.2	25.0	13.65	11.85
TCHD48S41S3	FC/MC/PC48	21.0,24.5	1400-1800	1600	47.0	33.8	13.25	11.50
	FC/MC/PC60	21.0,24.5	1400-1800	1600	46.5	33.2	13.00	11.25
	FC/MC62	24.5	1400-1800	1600	47.5	34.2	13.35	11.60
	FC64	24.5	1400-1800	1600	48.5	35.4	13.50	11.75
TCHD60S41S3	FC/MC62	24.5	1600-2000	1800	57.0	39.5	13.00	11.00
	FC64	24.5	1600-2000	1800	58.5	41.5	13.25	11.25

1. Requires a S1-2FD06700224 Blower Time Delay unless a standard furnace is equipped with one.

MA Modular Air Handlers use Coil Only Ratings.

PSC furnaces, such as the TG8S, TGLS, and TG9S, use Coil Only Ratings.

COOLING CAPACITY - With High Efficiency Motor Furnaces

UNIT MODEL	FURNACE		COIL MODEL[1]	COOLING				
	MODEL	WIDTH		RATED CFM	Net MBH		SEER	EER
					TOTAL	SENS.		
13 SEER AC WITH HIGH EFFICIENCY MOTOR FURNACES[2]								
TCHD18S41S3	T*(8,L)C*A12	14.5	FC/MC/PC18A	620	18.1	13.9	14.50	12.05
	T*(8,L)C*A12	14.5	FC/MC/PC24A	640	18.5	13.4	14.70	12.20
	T*(8,L)C*A12	14.5	FC/MC/PC32A	590	18.4	13.1	14.55	12.20
	T*(8,L)C*A12	14.5	FC/MC/PC37A	625	18.7	13.5	14.80	12.35
	T*(8,L)C*A12	14.5	HD24	640	19.1	13.8	15.10	12.60
	T*(8,L)C*A12	14.5	HD36	645	18.5	12.9	14.60	12.25
	T*(8,L)C*A12	14.5	UC18A	620	18.2	14.0	14.55	12.10
	T*(8,L)C*A12	14.5	UC24A	640	18.5	13.3	14.75	12.20
	T*(8,L)C*B12	17.5	FC/MC/PC18B	580	17.9	13.7	14.50	12.05
	T*(8,L)C*B12	17.5	FC/MC/PC24B	575	18.4	13.0	15.00	12.40
	T*(8,L)C*B12	17.5	FC/MC/PC35B	650	18.6	13.4	14.70	12.30
	T*(8,L)C*B12	17.5	HD24	575	19.0	13.4	15.30	12.75
	T*(8,L)C*B12	17.5	HD36	650	18.5	12.9	14.70	12.30
	T*(8,L)C*B12	17.5	UC18B	580	18.0	13.8	14.50	12.15
	T*(8,L)C*B12	17.5	UC24B	575	18.4	13.1	15.00	12.45
	T*(8,L)C*C16	21.0	FC/MC/PC35C	600	18.6	13.4	15.05	12.55
	T*(8,L)C*C16	21.0	HD36	595	18.6	12.9	15.00	12.50
	T*(8,L)V*A12	14.5	FC/MC/PC24A	640	18.5	13.4	14.70	12.20
	T*(8,L)V*A12	14.5	FC/MC/PC32A	590	18.4	13.1	14.55	12.20
	T*(8,L)V*A12	14.5	FC/MC/PC37A	625	18.7	13.5	14.80	12.35
	T*(8,L)V*A12	14.5	HD24	640	19.1	13.8	15.10	12.60
	T*(8,L)V*A12	14.5	HD36	645	18.5	12.9	14.60	12.25
	T*(8,L)V*A12	14.5	UC24A	640	18.5	13.3	14.75	12.20
	T*(8,L)V*B12	17.5	FC/MC/PC24B	575	18.4	13.0	15.00	12.40
	T*(8,L)V*B12	17.5	FC/MC/PC35B	650	18.6	13.4	14.70	12.30
	T*(8,L)V*B12	17.5	HD24	575	19.0	13.4	15.30	12.75
	T*(8,L)V*B12	17.5	HD36	650	18.5	12.9	14.70	12.30
	T*(8,L)V*B12	17.5	UC24B	575	18.4	13.1	15.00	12.45
	T*(8,L)V*C16	21.0	FC/MC/PC35C	600	18.6	13.4	15.05	12.55
	T*(8,L)V*C16	21.0	HD36	595	18.6	12.9	15.00	12.50
	T*(8,L)X*A12	14.5	FC/MC/PC24A	595	18.4	13.1	14.70	12.00
	T*(8,L)X*A12	14.5	FC/MC/PC32A	590	18.4	13.1	14.55	12.00
	T*(8,L)X*A12	14.5	HD24	605	19.0	13.9	13.75	12.25
	T*(8,L)X*A12	14.5	UC24A	570	18.4	13.0	14.75	12.00
	T*(8,L)X*B12	17.5	FC/MC/PC24B	620	18.4	13.1	14.75	12.00
	T*(8,L)X*B12	17.5	HD24	655	18.6	14.3	14.75	12.00
	T*(8,L)X*B12	17.5	UC24B	575	18.4	13.0	14.75	12.00
	T*(8,L)X*C16	21.0	HD24	650	18.1	14.0	15.00	11.50
	T*9(C,V)*B12	17.5	FC/MC/PC24B	610	18.5	13.4	14.85	12.30
	T*9(C,V)*B12	17.5	FC/MC/PC35B	570	18.4	12.9	14.70	12.30
	T*9(C,V)*B12	17.5	HD24	610	19.2	13.9	15.20	12.70
	T*9(C,V)*B12	17.5	HD36	635	18.5	12.9	14.75	12.35
	T*9(C,V)*B12	17.5	UC24B	610	18.5	13.3	14.85	12.40
	T*9(C,V)*C16	21.0	FC/MC/PC35C	645	18.6	13.4	14.85	12.40
	T*9(C,V)*C16	21.0	HD36	595	18.6	12.9	15.00	12.50
	T*9X*A10	14.5	FC/MC/PC18A	575	17.8	12.3	14.00	11.50
	T*9X*A10	14.5	FC/MC/PC24A	595	18.4	12.9	14.50	12.00
	T*9X*A10	14.5	FC/MC/PC32A	585	18.3	12.8	14.25	11.75
	T*9X*A10	14.5	FC/MC/PC37A	580	18.5	12.8	14.50	12.00
	T*9X*B12	17.5	FC/MC/PC24B	615	18.5	13.2	14.75	12.00
	T*9X*B12	17.5	HD24	630	19.0	13.9	13.75	12.25
	T*9X*B12	17.5	UC24B	615	18.5	13.4	14.75	12.00
	T*9V*A10	14.5	FC/MC/PC18A	580	17.8	12.3	13.75	11.50

For notes see Page 16.

COOLING CAPACITY - With High Efficiency Motor Furnaces (Continued)

UNIT MODEL	FURNACE		COIL MODEL[1]	COOLING				
	MODEL	WIDTH		RATED CFM	Net MBH		SEER	EER
					TOTAL	SENS.		
13 SEER AC WITH HIGH EFFICIENCY MOTOR FURNACES[2]								
TCHD18S41S3	T*9V*A10	14.5	FC/MC/PC24A	575	18.3	12.9	14.25	11.75
	T*9V*A10	14.5	FC/MC/PC32A	580	18.2	12.8	14.25	11.75
	T*9V*A10	14.5	FC/MC/PC37A	570	18.5	12.8	14.50	11.75
	Y*(8,L)C*A12	14.5	FC/MC/PC24A	640	18.5	13.4	14.70	12.20
	Y*(8,L)C*A12	14.5	FC/MC/PC32A	590	18.4	13.1	14.55	12.20
	Y*(8,L)C*A12	14.5	FC/MC/PC37A	625	18.7	13.5	14.80	12.35
	Y*(8,L)C*A12	14.5	HD24	640	19.1	13.8	15.10	12.60
	Y*(8,L)C*A12	14.5	HD36	645	18.5	12.9	14.60	12.25
	Y*(8,L)C*A12	14.5	UC24A	640	18.5	13.3	14.75	12.20
	Y*(8,L)C*B12	17.5	FC/MC/PC24B	575	18.4	13.0	15.00	12.40
	Y*(8,L)C*B12	17.5	FC/MC/PC35B	650	18.6	13.4	14.70	12.30
	Y*(8,L)C*B12	17.5	HD24	575	19.0	13.4	15.30	12.75
	Y*(8,L)C*B12	17.5	HD36	650	18.5	12.9	14.70	12.30
	Y*(8,L)C*B12	17.5	UC24B	575	18.4	13.1	15.00	12.45
	Y*(8,L)C*C16	21.0	FC/MC/PC35C	600	18.6	13.4	15.05	12.55
	Y*(8,L)C*C16	21.0	HD36	595	18.6	12.9	15.00	12.50
	Y*9C*B12	17.5	FC/MC/PC24B	610	18.5	13.4	14.85	12.30
	Y*9C*B12	17.5	FC/MC/PC35B	570	18.4	12.9	14.70	12.30
	Y*9C*B12	17.5	HD24	610	19.2	13.9	15.20	12.70
	Y*9C*B12	17.5	HD36	635	18.5	12.9	14.75	12.35
	Y*9C*B12	17.5	UC24B	610	18.5	13.3	14.85	12.40
	Y*9C*C16	21.0	FC/MC/PC35C	645	18.6	13.4	14.85	12.40
	Y*9C*C16	21.0	HD36	595	18.6	12.9	15.00	12.50
TCHD24S41S3	T*(8,L)C*A12	14.5	FC/MC/PC24A	805	23.6	17.3	14.50	12.10
	T*(8,L)C*A12	14.5	FC/MC/PC32A	775	23.6	17.5	14.20	12.00
	T*(8,L)C*A12	14.5	FC/MC/PC37A	805	24.0	17.7	14.40	12.15
	T*(8,L)C*A12	14.5	HD24	805	24.0	17.6	14.60	12.30
	T*(8,L)C*A12	14.5	HD36	805	23.4	16.8	14.30	12.10
	T*(8,L)C*A12	14.5	UC24A	805	23.6	17.4	14.50	12.10
	T*(8,L)C*B12	17.5	FC/MC/PC24B	815	23.6	17.5	14.70	12.25
	T*(8,L)C*B12	17.5	FC/MC/PC35B	760	23.6	17.1	14.50	12.20
	T*(8,L)C*B12	17.5	FC/MC/PC43B	760	24.0	17.4	14.70	12.45
	T*(8,L)C*B12	17.5	HD24	815	24.0	17.6	14.85	12.50
	T*(8,L)C*B12	17.5	HD36	760	23.4	16.5	14.35	12.10
	T*(8,L)C*B12	17.5	UC24B	815	23.6	17.4	14.70	12.25
	T*(8,L)C*C16	21.0	FC/MC/PC35C	855	24.0	18.1	14.75	12.45
	T*(8,L)C*C16	21.0	FC/MC/PC43C	895	24.4	18.9	14.90	12.60
	T*(8,L)C*C16	21.0	FC/MC/PC48C	815	23.4	17.6	14.65	12.25
	T*(8,L)C*C16	21.0	HD36	855	23.8	17.4	14.70	12.35
	T*(8,L)C*C16	21.0	UC48C	815	23.4	17.3	14.65	12.25
	T*(8,L)C*C20	21.0	FC/MC/PC35C	740	23.6	17.2	14.90	12.55
	T*(8,L)C*C20	21.0	FC/MC/PC43C	760	24.0	17.5	15.05	12.70
	T*(8,L)C*C20	21.0	HD36	750	23.4	16.4	14.75	12.40
	T*(8,L)V*A12	14.5	FC/MC/PC24A	805	23.6	17.3	14.50	12.10
	T*(8,L)V*A12	14.5	FC/MC/PC32A	775	23.6	17.5	14.20	12.00
	T*(8,L)V*A12	14.5	FC/MC/PC37A	805	24.0	17.7	14.40	12.15
	T*(8,L)V*A12	14.5	HD24	805	24.0	17.6	14.60	12.30
	T*(8,L)V*A12	14.5	HD36	805	23.4	16.8	14.30	12.10
	T*(8,L)V*A12	14.5	UC24A	805	23.6	17.4	14.50	12.10
	T*(8,L)V*B12	17.5	FC/MC/PC24B	815	23.6	17.5	14.70	12.25
	T*(8,L)V*B12	17.5	FC/MC/PC35B	760	23.6	17.1	14.50	12.20
	T*(8,L)V*B12	17.5	FC/MC/PC43B	760	24.0	17.4	14.70	12.45
	T*(8,L)V*B12	17.5	HD24	815	24.0	17.6	14.85	12.50

For notes see Page 16.

COOLING CAPACITY - With High Efficiency Motor Furnaces (Continued)

UNIT MODEL	FURNACE		COIL MODEL[1]	COOLING				
	MODEL	WIDTH		RATED CFM	Net MBH		SEER	EER
					TOTAL	SENS.		
13 SEER AC WITH HIGH EFFICIENCY MOTOR FURNACES[2]								
TCHD24S41S3	T*(8,L)V*B12	17.5	HD36	760	23.4	16.5	14.35	12.10
	T*(8,L)V*B12	17.5	UC24B	815	23.6	17.4	14.70	12.25
	T*(8,L)V*C16	21.0	FC/MC/PC35C	855	24.0	18.1	14.75	12.45
	T*(8,L)V*C16	21.0	FC/MC/PC43C	895	24.4	18.9	14.90	12.60
	T*(8,L)V*C16	21.0	FC/MC/PC48C	815	23.4	17.6	14.65	12.25
	T*(8,L)V*C16	21.0	HD36	855	23.8	17.4	14.70	12.35
	T*(8,L)V*C16	21.0	UC48C	815	23.4	17.3	14.65	12.25
	T*(8,L)V*C20	21.0	FC/MC/PC35C	740	23.6	17.2	14.90	12.55
	T*(8,L)V*C20	21.0	FC/MC/PC43C	760	24.0	17.5	15.05	12.70
	T*(8,L)V*C20	21.0	HD36	750	23.4	16.4	14.75	12.40
	T*(8,L)X*A12	14.5	FC/MC/PC24A	775	23.4	17.3	14.25	11.75
	T*(8,L)X*A12	14.5	FC/MC/PC32A	800	23.6	17.6	14.75	12.00
	T*(8,L)X*A12	14.5	FC/MC/PC37A	840	24.0	18.2	14.40	12.00
	T*(8,L)X*A12	14.5	HD36	815	23.0	17.0	14.25	11.75
	T*(8,L)X*A12	14.5	UC24A	785	23.4	17.2	14.25	11.75
	T*(8,L)X*B12	17.5	FC/MC/PC24B	835	23.6	17.7	14.50	12.00
	T*(8,L)X*B12	17.5	FC/MC/PC35B	850	23.6	17.8	14.75	12.00
	T*(8,L)X*B12	17.5	FC/MC/PC43B	865	24.0	18.5	14.70	12.25
	T*(8,L)X*B12	17.5	HD36	855	23.0	17.0	14.25	11.75
	T*(8,L)X*B12	17.5	UC24B	835	23.6	17.6	14.50	12.00
	T*(8,L)X*C16	21.0	FC/MC/PC35C	625	22.8	15.9	14.25	11.75
	T*(8,L)X*C16	21.0	FC/MC/PC43C	655	23.0	16.2	14.25	11.75
	T*(8,L)X*C16	21.0	FC/MC/PC48C	685	23.4	16.7	14.50	12.00
	T*(8,L)X*C16	21.0	HD36	855	23.0	17.0	14.25	11.75
	T*(8,L)X*C16	21.0	UC48C	685	23.4	16.8	14.50	12.00
	T*(8,L)X*C20	21.0	FC/MC/PC35C	885	23.6	18.1	14.75	12.00
	T*9(C,V)*B12	17.5	FC/MC/PC24B	790	23.4	17.2	14.50	12.05
	T*9(C,V)*B12	17.5	FC/MC/PC35B	815	23.8	17.6	14.30	12.15
	T*9(C,V)*B12	17.5	FC/MC/PC43B	800	24.0	17.8	14.60	12.30
	T*9(C,V)*B12	17.5	HD24	790	24.0	17.6	14.60	12.30
	T*9(C,V)*B12	17.5	HD36	815	23.4	16.8	14.35	12.15
	T*9(C,V)*B12	17.5	UC24B	790	23.4	17.3	14.50	12.05
	T*9(C,V)*C16	21.0	FC/MC/PC35C	900	24.2	18.5	14.60	12.35
	T*9(C,V)*C16	21.0	FC/MC/PC43C	810	24.2	18.0	14.75	12.45
	T*9(C,V)*C16	21.0	FC/MC/PC48C	890	23.6	18.3	14.40	12.15
	T*9(C,V)*C16	21.0	HD36	785	23.6	16.8	14.60	12.35
	T*9(C,V)*C16	21.0	UC48C	880	23.6	17.9	14.40	12.15
	T*9(C,V)*C20	21.0	FC/MC/PC35C	755	23.6	17.2	14.65	12.35
	T*9(C,V)*C20	21.0	FC/MC/PC43C	890	24.4	18.8	14.85	12.50
	T*9(C,V)*C20	21.0	HD36	760	23.4	16.6	14.60	12.30
	T*9X*A10	14.5	FC/MC/PC24A	765	23.2	16.8	14.25	11.75
	T*9X*A10	14.5	FC/MC/PC32A	745	23.2	16.9	14.25	11.75
	T*9X*A10	14.5	FC/MC/PC37A	740	23.4	17.1	14.25	11.75
	T*9X*B12	17.5	FC/MC/PC24B	775	23.4	17.3	14.25	11.75
	T*9X*B12	17.5	FC/MC/PC35B	785	23.8	17.7	14.75	12.00
	T*9X*B12	17.5	FC/MC/PC43B	800	24.0	18.0	14.75	12.00
	T*9X*B12	17.5	HD36	790	23.0	17.0	14.00	11.75
	T*9X*B12	17.5	UC24B	775	23.4	17.2	14.25	11.75
	T*9X*C16	21.0	FC/MC/PC35C	715	23.4	16.9	14.50	12.00
	T*9X*C16	21.0	FC/MC/PC43C	735	23.6	17.2	14.75	12.00
	T*9X*C16	21.0	FC/MC/PC48C	770	23.6	17.5	14.40	12.25
	T*9X*C16	21.0	UC48C	770	23.6	17.6	14.40	12.25
	T*9X*C20	21.0	FC/MC/PC35C	825	23.6	17.6	14.50	12.00
	T*9X*C20	21.0	FC/MC/PC43C	790	24.0	17.8	14.50	12.00

For notes see Page 16.

COOLING CAPACITY - With High Efficiency Motor Furnaces (Continued)

UNIT MODEL	FURNACE		COIL MODEL[1]	COOLING				
	MODEL	WIDTH		RATED CFM	Net MBH		SEER	EER
					TOTAL	SENS.		
13 SEER AC WITH HIGH EFFICIENCY MOTOR FURNACES[2]								
TCHD24S41S3	T*9X*C20	21.0	FC/MC/PC48C	815	24.0	18.0	14.50	12.00
	T*9X*C20	21.0	UC48C	815	24.0	18.0	14.50	12.00
	T*9V*A10	14.5	FC/MC/PC24A	785	23.0	16.8	14.00	11.50
	T*9V*A10	14.5	FC/MC/PC32A	785	23.4	17.2	14.00	11.50
	T*9V*A10	14.5	FC/MC/PC37A	790	23.6	17.5	14.00	11.50
	Y*(8,L)C*A12	14.5	FC/MC/PC24A	805	23.6	17.3	14.50	12.10
	Y*(8,L)C*A12	14.5	FC/MC/PC32A	775	23.6	17.5	14.20	12.00
	Y*(8,L)C*A12	14.5	FC/MC/PC37A	805	24.0	17.7	14.40	12.15
	Y*(8,L)C*A12	14.5	HD24	805	24.0	17.6	14.60	12.30
	Y*(8,L)C*A12	14.5	HD36	805	23.4	16.8	14.30	12.10
	Y*(8,L)C*A12	14.5	UC24A	805	23.6	17.4	14.50	12.10
	Y*(8,L)C*B12	17.5	FC/MC/PC24B	815	23.6	17.5	14.70	12.25
	Y*(8,L)C*B12	17.5	FC/MC/PC35B	760	23.6	17.1	14.50	12.20
	Y*(8,L)C*B12	17.5	FC/MC/PC43B	760	24.0	17.4	14.70	12.45
	Y*(8,L)C*B12	17.5	HD24	815	24.0	17.6	14.85	12.50
	Y*(8,L)C*B12	17.5	HD36	760	23.4	16.5	14.35	12.10
	Y*(8,L)C*B12	17.5	UC24B	815	23.6	17.4	14.70	12.25
	Y*(8,L)C*C16	21.0	FC/MC/PC35C	855	24.0	18.1	14.75	12.45
	Y*(8,L)C*C16	21.0	FC/MC/PC43C	895	24.4	18.9	14.90	12.60
	Y*(8,L)C*C16	21.0	FC/MC/PC48C	815	23.4	17.6	14.65	12.25
	Y*(8,L)C*C16	21.0	HD36	855	23.8	17.4	14.70	12.35
	Y*(8,L)C*C16	21.0	UC48C	815	23.4	17.3	14.65	12.25
	Y*(8,L)C*C20	21.0	FC/MC/PC35C	740	23.6	17.2	14.90	12.55
	Y*(8,L)C*C20	21.0	FC/MC/PC43C	760	24.0	17.5	15.05	12.70
	Y*(8,L)C*C20	21.0	HD36	750	23.4	16.4	14.75	12.40
	Y*9C*B12	17.5	FC/MC/PC24B	790	23.4	17.2	14.50	12.05
	Y*9C*B12	17.5	FC/MC/PC35B	815	23.8	17.6	14.30	12.15
	Y*9C*B12	17.5	FC/MC/PC43B	800	24.0	17.8	14.60	12.30
	Y*9C*B12	17.5	HD24	790	24.0	17.6	14.60	12.30
	Y*9C*B12	17.5	HD36	815	23.4	16.8	14.35	12.15
	Y*9C*B12	17.5	UC24B	790	23.4	17.3	14.50	12.05
	Y*9C*C16	21.0	FC/MC/PC35C	900	24.2	18.5	14.60	12.35
	Y*9C*C16	21.0	FC/MC/PC43C	810	24.2	18.0	14.75	12.45
	Y*9C*C16	21.0	FC/MC/PC48C	890	23.6	18.3	14.40	12.15
	Y*9C*C16	21.0	HD36	785	23.6	16.8	14.60	12.35
	Y*9C*C16	21.0	UC48C	880	23.6	17.9	14.40	12.15
	Y*9C*C20	21.0	FC/MC/PC35C	755	23.6	17.2	14.65	12.35
	Y*9C*C20	21.0	FC/MC/PC43C	890	24.4	18.8	14.85	12.50
	Y*9C*C20	21.0	HD36	760	23.4	16.6	14.60	12.30
TCHD30S41S3	T*(8,L)C*A12	14.5	FC/MC/PC32A	1045	28.0	21.0	13.65	12.10
	T*(8,L)C*A12	14.5	FC/MC/PC37A	980	28.8	21.6	14.50	12.80
	T*(8,L)C*A12	14.5	HD36	1000	28.0	20.2	14.30	12.65
	T*(8,L)C*B12	17.5	FC/MC/PC35B	995	28.4	21.2	14.50	12.75
	T*(8,L)C*B12	17.5	FC/MC/PC43B	990	28.8	21.8	15.00	13.20
	T*(8,L)C*B12	17.5	HD36	985	28.0	20.4	14.65	13.00
	T*(8,L)C*C16	21.0	FC/MC/PC35C	1025	28.4	21.4	15.00	13.15
	T*(8,L)C*C16	21.0	FC/MC/PC43C	990	29.0	21.8	15.35	13.60
	T*(8,L)C*C16	21.0	HD36	1020	28.2	20.4	14.80	13.05
	T*(8,L)C*C20	21.0	FC/MC/PC35C	1080	28.8	22.2	15.00	13.00
	T*(8,L)C*C20	21.0	FC/MC/PC43C	1000	29.0	21.8	15.40	13.65
	T*(8,L)C*C20	21.0	HD36	1055	28.4	21.0	15.00	13.25
	T*(8,L)V*A12	14.5	FC/MC/PC32A	1045	28.0	21.0	13.65	12.10
	T*(8,L)V*A12	14.5	FC/MC/PC37A	980	28.8	21.6	14.50	12.80

For notes see Page 16.

COOLING CAPACITY - With High Efficiency Motor Furnaces (Continued)

UNIT MODEL	FURNACE		COIL MODEL[1]	COOLING				
	MODEL	WIDTH		RATED CFM	Net MBH		SEER	EER
					TOTAL	SENS.		
13 SEER AC WITH HIGH EFFICIENCY MOTOR FURNACES[2]								
TCHD30S41S3	T*(8,L)V*A12	14.5	HD36	1000	28.0	20.2	14.30	12.65
	T*(8,L)V*B12	17.5	FC/MC/PC35B	995	28.4	21.2	14.50	12.75
	T*(8,L)V*B12	17.5	FC/MC/PC43B	990	28.8	21.8	15.00	13.20
	T*(8,L)V*B12	17.5	HD36	985	28.0	20.4	14.65	13.00
	T*(8,L)V*C16	21.0	FC/MC/PC35C	1025	28.4	21.4	15.00	13.15
	T*(8,L)V*C16	21.0	FC/MC/PC43C	990	29.0	21.8	15.35	13.60
	T*(8,L)V*C16	21.0	HD36	1020	28.2	20.4	14.80	13.05
	T*(8,L)V*C20	21.0	FC/MC/PC35C	1080	28.8	22.2	15.00	13.00
	T*(8,L)V*C20	21.0	FC/MC/PC43C	1000	29.0	21.8	15.40	13.65
	T*(8,L)V*C20	21.0	HD36	1055	28.4	21.0	15.00	13.25
	T*(8,L)X*A12	14.5	FC/MC/PC32A	970	28.0	20.7	13.65	12.25
	T*(8,L)X*A12	14.5	FC/MC/PC37A	1105	28.8	22.2	14.50	13.00
	T*(8,L)X*A12	14.5	HD36	1115	28.0	21.0	14.00	12.50
	T*(8,L)X*B12	17.5	FC/MC/PC35B	1120	28.4	21.6	14.50	12.75
	T*(8,L)X*B12	17.5	FC/MC/PC43B	1125	28.8	21.6	14.25	12.25
	T*(8,L)X*B12	17.5	HD36	1150	28.0	21.0	14.00	12.50
	T*(8,L)X*C16	21.0	FC/MC/PC35C	1105	28.4	21.6	14.75	13.00
	T*(8,L)X*C16	21.0	HD36	975	28.2	21.1	14.00	12.75
	T*(8,L)X*C16	21.0	UC48C	815	26.4	18.9	14.50	12.50
	T*(8,L)X*C20	21.0	FC/MC/PC35C	850	27.8	20.1	14.75	13.00
	T*(8,L)X*C20	21.0	FC/MC/PC43C	870	26.4	21.3	14.50	12.50
	T*(8,L)X*C20	21.0	FC/MC/PC48C	890	28.8	20.9	15.50	13.50
	T*(8,L)X*C20	21.0	UC48C	960	27.4	20.1	14.75	12.75
	T*9(C,V)*B12	17.5	FC/MC/PC35B	1045	28.2	21.6	14.25	12.50
	T*9(C,V)*B12	17.5	FC/MC/PC43B	1035	28.8	21.6	14.50	12.85
	T*9(C,V)*B12	17.5	HD36	985	28.0	20.4	14.60	12.85
	T*9(C,V)*C16	21.0	FC/MC/PC35C	1005	28.4	21.4	15.00	13.10
	T*9(C,V)*C16	21.0	FC/MC/PC43C	1030	28.8	21.6	14.80	13.15
	T*9(C,V)*C16	21.0	HD36	1005	28.2	20.4	14.85	13.05
	T*9(C,V)*C20	21.0	FC/MC/PC35C	985	28.4	21.4	15.00	13.10
	T*9(C,V)*C20	21.0	FC/MC/PC43C	995	29.0	21.8	15.20	13.45
	T*9(C,V)*C20	21.0	HD36	1045	28.0	20.4	14.65	13.00
	T*9X*A10	14.5	FC/MC/PC32A	1035	28.0	21.0	13.25	11.75
	T*9X*A10	14.5	FC/MC/PC37A	1025	28.2	24.4	13.50	12.00
	T*9X*B12	17.5	FC/MC/PC35B	1085	28.2	21.4	14.25	12.75
	T*9X*B12	17.5	FC/MC/PC43B	1095	28.8	21.6	14.25	12.25
	T*9X*B12	17.5	HD36	1105	28.0	21.0	14.00	12.50
	T*9X*C16	21.0	FC/MC/PC35C	1075	28.4	21.5	14.75	13.00
	T*9X*C16	21.0	FC/MC/PC43C	1055	28.8	21.1	14.25	12.25
	T*9X*C16	21.0	FC/MC/PC48C	1075	29.4	22.6	15.25	13.25
	T*9X*C16	21.0	UC48C	1035	27.6	20.7	14.25	12.25
	Y*(8,L)C*A12	14.5	FC/MC/PC32A	1045	28.0	21.0	13.65	12.10
	Y*(8,L)C*A12	14.5	FC/MC/PC37A	980	28.8	21.6	14.50	12.80
	Y*(8,L)C*A12	14.5	HD36	1000	28.0	20.2	14.30	12.65
	Y*(8,L)C*B12	17.5	FC/MC/PC35B	995	28.4	21.2	14.50	12.75
	Y*(8,L)C*B12	17.5	FC/MC/PC43B	990	28.8	21.8	15.00	13.20
	Y*(8,L)C*B12	17.5	HD36	985	28.0	20.4	14.65	13.00
	Y*(8,L)C*C16	21.0	FC/MC/PC35C	1025	28.4	21.4	15.00	13.15
	Y*(8,L)C*C16	21.0	FC/MC/PC43C	990	29.0	21.8	15.35	13.60
	Y*(8,L)C*C16	21.0	HD36	1020	28.2	20.4	14.80	13.05
	Y*(8,L)C*C20	21.0	FC/MC/PC35C	1080	28.8	22.2	15.00	13.00
	Y*(8,L)C*C20	21.0	FC/MC/PC43C	1000	29.0	21.8	15.40	13.65
	Y*(8,L)C*C20	21.0	HD36	1055	28.4	21.0	15.00	13.25

For notes see Page 16.

COOLING CAPACITY - With High Efficiency Motor Furnaces (Continued)

UNIT MODEL	FURNACE		COIL MODEL[1]	COOLING				
	MODEL	WIDTH		RATED CFM	Net MBH		SEER	EER
					TOTAL	SENS.		
13 SEER AC WITH HIGH EFFICIENCY MOTOR FURNACES[2]								
TCHD30S41S3	Y*9C*B12	17.5	FC/MC/PC35B	1045	28.2	21.6	14.25	12.50
	Y*9C*B12	17.5	FC/MC/PC43B	1035	28.8	21.6	14.50	12.85
	Y*9C*B12	17.5	HD36	985	28.0	20.4	14.60	12.85
	Y*9C*C16	21.0	FC/MC/PC35C	1005	28.4	21.4	15.00	13.10
	Y*9C*C16	21.0	FC/MC/PC43C	1030	28.8	21.6	14.80	13.15
	Y*9C*C16	21.0	HD36	1005	28.2	20.4	14.85	13.05
	Y*9C*C20	21.0	FC/MC/PC35C	985	28.4	21.4	15.00	13.10
	Y*9C*C20	21.0	FC/MC/PC43C	995	29.0	21.8	15.20	13.45
	Y*9C*C20	21.0	HD36	1045	28.0	20.4	14.65	13.00
TCHD36S41S3	T*(8,L)C*A12	14.5	FC/MC/PC32A	1045	32.6	23.7	13.45	11.70
	T*(8,L)C*A12	14.5	FC/MC/PC37A	980	33.0	23.0	13.95	12.00
	T*(8,L)C*A12	14.5	HD36	1190	33.2	23.2	13.40	11.70
	T*(8,L)C*B12	17.5	FC/MC/PC35B	1220	33.4	23.4	13.55	11.75
	T*(8,L)C*B12	17.5	FC/MC/PC43B	1210	34.2	25.2	13.95	12.00
	T*(8,L)C*B12	17.5	HD36	1220	33.2	23.2	13.70	12.00
	T*(8,L)C*B12	17.5	HD48	1210	34.6	25.2	14.50	12.45
	T*(8,L)C*C16	21.0	FC/MC/PC35C	1235	33.6	23.6	14.20	12.30
	T*(8,L)C*C16	21.0	FC/MC/PC43C	1205	34.4	25.4	14.60	12.50
	T*(8,L)C*C16	21.0	FC/MC/PC48C	1210	35.0	26.0	15.10	13.00
	T*(8,L)C*C16	21.0	HD36	1235	33.4	23.4	14.15	12.30
	T*(8,L)C*C16	21.0	HD48	1210	34.8	25.4	15.00	13.00
	T*(8,L)C*C16	21.0	UC48C	1210	33.6	24.8	14.55	12.45
	T*(8,L)C*C20	21.0	FC/MC/PC35C	1170	33.8	23.8	14.50	12.55
	T*(8,L)C*C20	21.0	FC/MC/PC43C	1190	34.6	25.4	14.80	12.50
	T*(8,L)C*C20	21.0	FC/MC/PC48C	1155	35.2	26.0	15.35	13.10
	T*(8,L)C*C20	21.0	HD36	1240	33.6	23.6	14.30	12.40
	T*(8,L)C*C20	21.0	HD48	1155	34.8	25.4	15.20	13.05
	T*(8,L)C*C20	21.0	UC48C	1155	33.6	24.8	14.75	12.60
	T*(8,L)V*A12	14.5	FC/MC/PC37A	980	33.0	23.0	13.95	12.00
	T*(8,L)V*B12	17.5	FC/MC/PC43B	1210	34.2	25.2	13.95	12.00
	T*(8,L)V*B12	17.5	HD48	1210	34.6	25.2	14.50	12.45
	T*(8,L)V*C16	21.0	FC/MC/PC43C	1205	34.4	25.4	14.60	12.50
	T*(8,L)V*C16	21.0	FC/MC/PC48C	1210	35.0	26.0	15.10	13.00
	T*(8,L)V*C16	21.0	HD48	1210	34.8	25.4	15.00	13.00
	T*(8,L)V*C16	21.0	UC48C	1210	33.6	24.8	14.55	12.45
	T*(8,L)V*C20	21.0	FC/MC/PC43C	1190	34.6	25.4	14.80	12.50
	T*(8,L)V*C20	21.0	FC/MC/PC48C	1155	35.2	26.0	15.35	13.10
	T*(8,L)V*C20	21.0	HD48	1155	34.8	25.4	15.20	13.05
	T*(8,L)V*C20	21.0	UC48C	1155	33.6	24.8	14.75	12.60
	T*(8,L)X*A12	14.5	FC/MC/PC37A	1290	33.0	24.8	14.05	12.00
	T*(8,L)X*B12	17.5	FC/MC/PC43B	1300	34.2	25.7	14.00	12.00
	T*(8,L)X*C16	21.0	FC/MC/PC43C	1175	34.4	25.3	14.75	12.50
	T*(8,L)X*C16	21.0	FC/MC/PC48C	1185	34.8	25.9	15.10	12.75
	T*(8,L)X*C16	21.0	HD48	1120	34.2	24.9	14.00	12.50
	T*(8,L)X*C16	21.0	UC48C	1185	32.8	23.9	14.25	12.00
	T*(8,L)X*C20	21.0	FC/MC/PC43C	1250	34.6	26.1	15.00	12.50
	T*(8,L)X*C20	21.0	FC/MC/PC48C	1270	35.2	26.4	15.00	12.75
	T*(8,L)X*C20	21.0	HD48	1245	34.8	26.0	14.00	12.75
	T*(8,L)X*C20	21.0	UC48C	1245	33.2	24.7	14.00	12.00
	T*9(C,V)*B12	17.5	FC/MC/PC35B	1190	33.4	24.6	13.65	11.85
	T*9(C,V)*B12	17.5	HD36	1165	33.4	24.6	13.85	12.05
	T*9(C,V)*B12	17.5	FC/MC/PC43B	1200	34.2	25.2	14.00	12.10
	T*9(C,V)*B12	17.5	HD48	1150	34.4	25.2	14.25	12.35

For notes see Page 16.

COOLING CAPACITY - With High Efficiency Motor Furnaces (Continued)

UNIT MODEL	FURNACE		COIL MODEL[1]	COOLING				
	MODEL	WIDTH		RATED CFM	Net MBH		SEER	EER
					TOTAL	SENS.		
13 SEER AC WITH HIGH EFFICIENCY MOTOR FURNACES[2]								
TCHD36S41S3	T*9(C,V)*C16	21.0	FC/MC/PC43C	1240	34.2	25.2	14.20	12.25
	T*9(C,V)*C16	21.0	FC/MC/PC48C	1195	35.0	25.8	14.85	12.80
	T*9(C,V)*C16	21.0	HD36	1185	33.4	24.6	14.20	12.35
	T*9(C,V)*C16	21.0	HD48	1195	34.6	25.2	14.70	12.70
	T*9(C,V)*C16	21.0	UC48C	1195	33.4	24.6	14.25	12.25
	T*9(C,V)*C20	21.0	FC/MC/PC35C	1275	34.2	25.7	13.80	12.00
	T*9(C,V)*C20	21.0	FC/MC/PC43C	1200	34.4	25.4	14.65	12.60
	T*9(C,V)*C20	21.0	FC/MC/PC48C	1315	35.2	26.8	14.55	12.55
	T*9(C,V)*C20	21.0	HD36	1265	33.8	25.0	13.85	12.05
	T*9(C,V)*C20	21.0	HD48	1300	34.8	26.2	14.35	12.40
	T*9(C,V)*C20	21.0	UC48C	1265	33.8	25.4	14.00	12.00
	T*9(C,V)*D20	24.5	FC/MC/PC48D	1240	35.2	26.2	15.00	13.00
	T*9(C,V)*D20	24.5	HD48	1225	34.8	25.6	15.00	12.85
	T*9(C,V)*D20	24.5	UC48D	1240	33.4	24.6	14.35	12.30
	T*9X*B12	17.5	FC/MC/PC43B	1270	34.2	25.7	14.00	12.00
	T*9X*C16	21.0	FC/MC/PC43C	1260	34.2	25.9	14.20	12.25
	T*9X*C16	21.0	FC/MC/PC48C	1280	35.0	26.3	14.50	12.50
	T*9X*C16	21.0	UC48C	1235	33.0	24.3	13.50	11.75
	T*9X*C20	21.0	FC/MC/PC43C	1185	34.2	25.3	14.65	12.25
	T*9X*C20	21.0	FC/MC/PC48C	1205	34.6	25.7	14.55	12.50
	T*9X*C20	21.0	HD48	1245	34.8	26.0	14.00	12.75
	T*9X*C20	21.0	UC48C	1205	32.6	23.7	13.75	11.75
	T*9X*D20	24.5	FC/MC/PC48D	1240	34.8	25.7	14.75	12.50
	T*9X*D20	24.5	HD48	1260	34.8	26.3	14.00	12.75
	T*9X*D20	24.5	UC48D	1215	32.6	23.7	13.75	11.75
	Y*(8,L)C*A12	14.5	FC/MC/PC37A	980	33.0	23.0	13.95	12.00
	Y*(8,L)C*B12	17.5	FC/MC/PC43B	1210	34.2	25.2	13.95	12.00
	Y*(8,L)C*B12	17.5	HD48	1210	34.6	25.2	14.50	12.45
	Y*(8,L)C*C16	21.0	FC/MC/PC43C	1205	34.4	25.4	14.60	12.50
	Y*(8,L)C*C16	21.0	FC/MC/PC48C	1210	35.0	26.0	15.10	13.00
	Y*(8,L)C*C16	21.0	HD48	1210	34.8	25.4	15.00	13.00
	Y*(8,L)C*C16	21.0	UC48C	1210	33.6	24.8	14.55	12.45
	Y*(8,L)C*C20	21.0	FC/MC/PC43C	1190	34.6	25.4	14.80	12.50
	Y*(8,L)C*C20	21.0	FC/MC/PC48C	1155	35.2	26.0	15.35	13.10
	Y*(8,L)C*C20	21.0	HD48	1155	34.8	25.4	15.20	13.05
	Y*(8,L)C*C20	21.0	UC48C	1155	33.6	24.8	14.75	12.60
	Y*9C*B12	17.5	FC/MC/PC43B	1200	34.2	25.2	14.00	12.10
	Y*9C*B12	17.5	HD48	1150	34.4	25.2	14.25	12.35
	Y*9C*C16	21.0	FC/MC/PC43C	1240	34.2	25.2	14.20	12.25
	Y*9C*C16	21.0	FC/MC/PC48C	1195	35.0	25.8	14.85	12.80
	Y*9C*C16	21.0	HD48	1195	34.6	25.2	14.70	12.70
	Y*9C*C16	21.0	UC48C	1195	33.4	24.6	14.25	12.25
	Y*9C*C20	21.0	FC/MC/PC43C	1200	34.4	25.4	14.65	12.60
	Y*9C*C20	21.0	FC/MC/PC48C	1315	35.2	26.8	14.55	12.55
	Y*9C*C20	21.0	HD48	1300	34.8	26.2	14.35	12.40
	Y*9C*C20	21.0	UC48C	1265	33.8	25.4	14.00	12.00
	Y*9C*D20	24.5	FC/MC/PC48D	1240	35.2	26.2	15.00	13.00
	Y*9C*D20	24.5	HD48	1225	34.8	25.6	15.00	12.85
	Y*9C*D20	24.5	UC48D	1240	33.4	24.6	14.35	12.30

For notes see Page 16.

COOLING CAPACITY - With High Efficiency Motor Furnaces (Continued)

UNIT MODEL	FURNACE		COIL MODEL[1]	COOLING				
	MODEL	WIDTH		RATED CFM	Net MBH		SEER	EER
					TOTAL	SENS.		
13 SEER AC WITH HIGH EFFICIENCY MOTOR FURNACES[2]								
TCHD48S41S3	T*(8,L)C*C16	21.0	FC/MC/PC48C	1615	47.0	34.2	13.25	11.50
	T*(8,L)C*C16	21.0	FC/PC60C	1625	46.5	33.7	13.25	11.50
	T*(8,L)C*C16	21.0	FC64D	1635	49.0	35.8	14.00	12.25
	T*(8,L)C*C16	21.0	HD48	1615	47.0	34.2	13.45	11.65
	T*(8,L)C*C16	21.0	HD60	1625	47.5	34.4	13.70	11.85
	T*(8,L)C*C16	21.0	UC48C	1615	45.5	33.2	13.10	11.35
	T*(8,L)C*C16	21.0	UC60C	1625	46.0	32.8	13.30	11.50
	T*(8,L)C*C20	21.0	FC/MC/PC48C	1640	47.0	34.0	13.45	11.65
	T*(8,L)C*C20	21.0	FC/PC60C	1605	47.0	34.2	14.00	11.60
	T*(8,L)C*C20	21.0	FC64D	1630	49.0	35.8	14.25	12.25
	T*(8,L)C*C20	21.0	HD48	1640	47.0	34.2	13.45	11.65
	T*(8,L)C*C20	21.0	HD60	1605	47.5	34.6	14.00	12.05
	T*(8,L)C*C20	21.0	UC48C	1640	45.5	33.0	13.05	11.35
	T*(8,L)C*C20	21.0	UC60C	1605	46.0	33.0	13.55	11.70
	T*(8,L)V*C16	21.0	FC/MC/PC48C	1615	47.0	34.2	13.25	11.50
	T*(8,L)V*C16	21.0	FC/PC60C	1625	46.5	33.7	13.25	11.50
	T*(8,L)V*C16	21.0	FC64D	1635	49.0	35.8	14.00	12.25
	T*(8,L)V*C16	21.0	HD60	1625	47.5	34.4	13.70	11.85
	T*(8,L)V*C16	21.0	UC48C	1615	45.5	33.2	13.10	11.35
	T*(8,L)V*C16	21.0	UC60C	1625	46.0	32.8	13.30	11.50
	T*(8,L)V*C20	21.0	FC/MC/PC48C	1640	47.0	34.0	13.45	11.65
	T*(8,L)V*C20	21.0	FC/PC60C	1605	47.0	34.2	14.00	11.60
	T*(8,L)V*C20	21.0	FC64D	1630	49.0	35.8	14.25	12.25
	T*(8,L)V*C20	21.0	HD60	1605	47.5	34.6	14.00	12.05
	T*(8,L)V*C20	21.0	UC48C	1640	45.5	33.0	13.05	11.35
	T*(8,L)V*C20	21.0	UC60C	1605	46.0	33.0	13.55	11.70
	T*(8,L)X*C16	21.0	FC/MC/PC48C	1600	47.0	34.0	13.50	11.50
	T*(8,L)X*C16	21.0	FC/MC62D	1610	47.0	34.4	13.50	11.50
	T*(8,L)X*C16	21.0	FC/PC60C	1605	46.5	33.6	13.25	11.50
	T*(8,L)X*C16	21.0	FC64D	1610	49.0	35.8	14.25	12.25
	T*(8,L)X*C16	21.0	UC48C	1640	45.5	32.8	13.00	11.00
	T*(8,L)X*C16	21.0	UC60C	1640	45.5	32.4	13.00	11.25
	T*(8,L)X*C20	21.0	FC/MC/PC48C	1660	47.5	34.6	13.50	11.75
	T*(8,L)X*C20	21.0	FC/MC/PC60D	1595	46.5	33.6	13.50	11.50
	T*(8,L)X*C20	21.0	FC/MC62D	1665	47.5	34.4	13.75	11.75
	T*(8,L)X*C20	21.0	FC/PC60C	1595	46.5	33.6	13.50	11.50
	T*(8,L)X*C20	21.0	FC64D	1665	49.5	36.0	14.50	12.50
	T*(8,L)X*C20	21.0	UC48C	1515	45.0	31.6	13.05	11.50
	T*(8,L)X*C20	21.0	UC60C	1540	45.0	32.2	13.50	11.75
	T*(8,L)X*C20	21.0	UC60D	1540	45.0	32.2	13.75	11.75
	T*9(C,V)*C16	21.0	FC/MC/PC48C	1590	47.0	33.8	13.45	11.65
	T*9(C,V)*C16	21.0	FC/PC60C	1590	47.0	34.4	13.40	11.65
	T*9(C,V)*C16	21.0	FC64D	1590	49.0	35.6	14.00	12.00
	T*9(C,V)*C16	21.0	HD48	1590	47.0	34.2	13.35	11.60
	T*9(C,V)*C16	21.0	HD60	1590	47.0	34.2	13.50	11.65
	T*9(C,V)*C16	21.0	UC48C	1590	45.5	33.0	13.00	11.30
	T*9(C,V)*C16	21.0	UC60C	1590	45.5	32.8	13.05	11.30
	T*9(C,V)*C20	21.0	FC/MC/PC48C	1655	47.5	34.4	13.50	11.70
	T*9(C,V)*C20	21.0	FC/PC60C	1655	47.0	34.4	13.35	11.65
	T*9(C,V)*C20	21.0	FC64D	1655	49.0	35.6	13.75	11.75
	T*9(C,V)*C20	21.0	HD48	1655	47.0	34.2	13.35	11.60
	T*9(C,V)*C20	21.0	HD60	1655	47.0	34.2	13.50	11.65
	T*9(C,V)*C20	21.0	UC48C	1655	45.5	33.0	13.00	11.30

For notes see Page 16.

COOLING CAPACITY - With High Efficiency Motor Furnaces (Continued)

UNIT MODEL	FURNACE		COIL MODEL[1]	COOLING				
	MODEL	WIDTH		RATED CFM	Net MBH		SEER	EER
					TOTAL	SENS.		
13 SEER AC WITH HIGH EFFICIENCY MOTOR FURNACES[2]								
TCHD48S41S3	T*9(C,V)*C20	21.0	UC60C	1655	45.5	32.8	13.05	11.30
	T*9(C,V)*D20	24.5	FC/MC/PC48D	1645	47.5	34.4	13.50	11.70
	T*9(C,V)*D20	24.5	FC/MC/PC60D	1615	47.0	34.4	13.50	11.75
	T*9(C,V)*D20	24.5	FC/MC62D	1630	47.5	34.6	13.65	11.85
	T*9(C,V)*D20	24.5	FC64D	1630	49.0	35.6	13.75	12.00
	T*9(C,V)*D20	24.5	HD48	1645	47.0	34.2	13.35	11.60
	T*9(C,V)*D20	24.5	HD60	1615	47.5	34.4	13.60	11.75
	T*9(C,V)*D20	24.5	UC48D	1645	45.5	33.0	13.00	11.30
	T*9(C,V)*D20	24.5	UC60D	1615	46.0	32.8	13.20	11.40
	T*9X*C16	21.0	FC/MC/PC48C	1565	47.0	33.6	13.25	11.50
	T*9X*C16	21.0	FC/MC62D	1550	47.0	34.2	13.50	11.50
	T*9X*C16	21.0	FC/PC60C	1575	45.5	33.6	13.00	11.25
	T*9X*C16	21.0	FC64D	1550	49.0	35.8	14.25	12.25
	T*9X*C16	21.0	UC48C	1565	45.0	32.8	13.00	11.00
	T*9X*C20	21.0	FC/MC/PC48C	1615	47.0	34.2	13.50	11.50
	T*9X*C20	21.0	FC/MC62D	1595	47.5	34.4	13.50	11.50
	T*9X*C20	21.0	FC/PC60C	1625	45.5	33.6	13.25	11.25
	T*9X*C20	21.0	FC64D	1595	49.0	36.0	14.25	12.50
	T*9X*C20	21.0	UC48C	1615	45.5	32.8	13.00	11.25
	T*9X*D20	24.5	FC/MC/PC48D	1635	47.0	34.2	13.50	11.50
	T*9X*D20	24.5	FC/MC/PC60D	1490	46.5	32.8	13.50	11.75
	T*9X*D20	24.5	FC/MC62D	1610	47.0	34.2	13.50	11.50
	T*9X*D20	24.5	FC64D	1610	49.0	35.8	14.25	12.25
	T*9X*D20	24.5	UC48D	1635	45.0	32.8	13.00	11.00
	T*9X*D20	24.5	UC60D	1490	45.0	31.6	13.20	11.50
	Y*(8,L)C*C16	21.0	FC/MC/PC48C	1615	47.0	34.2	13.25	11.50
	Y*(8,L)C*C16	21.0	FC/PC60C	1625	46.5	33.7	13.25	11.50
	Y*(8,L)C*C16	21.0	FC64D	1635	49.0	35.8	14.00	12.25
	Y*(8,L)C*C16	21.0	HD60	1625	47.5	34.4	13.70	11.85
	Y*(8,L)C*C16	21.0	UC48C	1615	45.5	33.2	13.10	11.35
	Y*(8,L)C*C16	21.0	UC60C	1625	46.0	32.8	13.30	11.50
	Y*(8,L)C*C20	21.0	FC/MC/PC48C	1640	47.0	34.0	13.45	11.65
	Y*(8,L)C*C20	21.0	FC/PC60C	1605	47.0	34.2	14.00	11.60
	Y*(8,L)C*C20	21.0	FC64D	1630	49.0	35.8	14.25	12.25
	Y*(8,L)C*C20	21.0	HD60	1605	47.5	34.6	14.00	12.05
	Y*(8,L)C*C20	21.0	UC48C	1640	45.5	33.0	13.05	11.35
	Y*(8,L)C*C20	21.0	UC60C	1605	46.0	33.0	13.55	11.70
	Y*9C*C16	21.0	FC/MC/PC48C	1590	47.0	33.8	13.45	11.65
	Y*9C*C16	21.0	FC/PC60C	1590	47.0	34.4	13.40	11.65
	Y*9C*C16	21.0	FC64D	1590	49.0	35.6	14.00	12.00
	Y*9C*C16	21.0	HD60	1590	47.0	34.2	13.50	11.65
	Y*9C*C16	21.0	UC48C	1590	45.5	33.0	13.00	11.30
	Y*9C*C16	21.0	UC60C	1590	45.5	32.8	13.05	11.30
	Y*9C*C20	21.0	FC/MC/PC48C	1655	47.5	34.4	13.50	11.70
	Y*9C*C20	21.0	FC/PC60C	1655	47.0	34.4	13.35	11.65
	Y*9C*C20	21.0	FC64D	1655	49.0	35.6	13.75	11.75
	Y*9C*C20	21.0	HD60	1655	47.0	34.2	13.50	11.65
	Y*9C*C20	21.0	UC48C	1655	45.5	33.0	13.00	11.30
	Y*9C*C20	21.0	UC60C	1655	45.5	32.8	13.05	11.30
	Y*9C*D20	24.5	FC/MC/PC48D	1645	47.5	34.4	13.50	11.70
	Y*9C*D20	24.5	FC/MC/PC60D	1615	47.0	34.4	13.50	11.75
	Y*9C*D20	24.5	FC/MC62D	1630	47.5	34.6	13.65	11.85
	Y*9C*D20	24.5	FC64D	1630	49.0	35.6	13.75	12.00

For notes see Page 16.

COOLING CAPACITY - With High Efficiency Motor Furnaces (Continued)

UNIT MODEL	FURNACE		COIL MODEL[1]	COOLING				
	MODEL	WIDTH		RATED CFM	Net MBH		SEER	EER
					TOTAL	SENS.		
13 SEER AC WITH HIGH EFFICIENCY MOTOR FURNACES[2]								
TCHD48S41S3	Y*9C*D20	24.5	HD60	1615	47.5	34.4	13.60	11.75
	Y*9C*D20	24.5	UC48D	1645	45.5	33.0	13.00	11.30
	Y*9C*D20	24.5	UC60D	1615	46.0	32.8	13.20	11.40
TCHD60S41S3	T*(8,L)C*C16	21.0	HD60	1740	57.0	40.0	13.05	11.15
	T*(8,L)C*C20	21.0	FC/MC62D	1615	56.5	38.5	13.30	11.30
	T*(8,L)C*C20	21.0	HD60	1605	56.0	38.0	13.40	11.40
	T*(8,L)V*C16	21.0	HD60	1740	57.0	40.0	13.05	11.15
	T*(8,L)V*C20	21.0	FC/MC62D	1615	56.5	38.5	13.30	11.30
	T*(8,L)X*C20	21.0	FC/MC62D	1665	56.5	38.2	13.25	11.25
	T*(8,L)X*C20	21.0	FC64D	1665	58.5	40.5	14.00	11.75
	T*9(C,V)*C16	21.0	HD60	1590	56.0	38.0	13.15	11.20
	T*9(C,V)*C20	21.0	FC/MC62D	1655	56.5	38.0	13.15	11.10
	T*9(C,V)*C20	21.0	FC64D	1655	58.0	40.0	13.25	11.25
	T*9(C,V)*C20	21.0	HD60	1655	56.0	38.0	13.00	11.10
	T*9(C,V)*D20	24.5	FC/MC62D	1630	56.5	38.0	13.30	11.20
	T*9(C,V)*D20	24.5	FC64D	1630	58.0	40.0	13.50	11.50
	T*9(C,V)*D20	24.5	HD60	1615	56.0	38.0	13.10	11.15
	T*9X*C20	21.0	FC64D	1595	58.0	40.0	13.75	11.75
	T*9X*D20	24.5	FC64D	1645	58.5	40.0	13.75	11.75
	Y*(8,L)C*C16	21.0	HD60	1740	57.0	40.0	13.05	11.15
	Y*(8,L)C*C20	21.0	FC/MC62D	1615	56.5	38.5	13.30	11.30
	Y*9C*C16	21.0	HD60	1590	56.0	38.0	13.15	11.20
	Y*9C*C20	21.0	FC/MC62D	1655	56.5	38.0	13.15	11.10
	Y*9C*C20	21.0	FC64D	1655	58.0	40.0	13.25	11.25
	Y*9C*D20	24.5	FC/MC62D	1630	56.5	38.0	13.30	11.20
	Y*9C*D20	24.5	FC64D	1630	58.0	40.0	13.50	11.50

1. MC coils available with a factory installed horizontal drain pan. See price pages for specific model number.
2. High Efficiency Motor Furnaces have B.O.D (Blower on Delay) standard.

PSC furnaces, such as the TG8S, TGLS, and TG9S, use Coil Only Ratings.

ACCESSORIES

Refer to Price Manual for specific model numbers.

Start Assist Kit (S1-2SA067) - Provides increased starting torque for areas with low voltage. See Hard Start Kit Accessory Installation Manual for Hard Start Kit part number for each model.

TXV Kits - S1-1TVM series thermal expansion valves precisely meter refrigerant for optimum performance over a wide range of conditions. See System Charge table for TXV part number for each model.

Off Cycle Timer Delay - Provides a 5-minute off cycle to prevent rapid recycling of the compressor.

Stacking Kit (S1-1HDSTACK01) - allows units to be nstacked to high.

Thermostats - Compatible thermostat controls are available through accessory sourcing. For optimum performance and installation, refer to the UPGNET “Low Voltage Wiring Diagram” document to select and apply controls.

SOUND POWER - TYPICAL OCTAVE BAND SPECTRUM (without tone adjustment)

Model Number	Octave Band Sound Power Level (db re. 1-pW)								
	63	125	250	500	1000	2000	4000	8000	dBA
TCHD18S41S3	71	71	76	65	62	57	52	48	70
TCHD24S41S3	72	72	70	64	67	57	51	48	69
TCHD30S41S3	73	78	69	67	65	60	57	58	70
TCHD36S41S3	74	77	68	67	66	61	58	58	71
TCHD48S41S3	75	81	70	68	66	61	58	58	72
TCHD60S41S3	73	81	71	67	66	61	58	59	72

Rated in accordance with ARI 270.

TYPICAL INSTALLATION

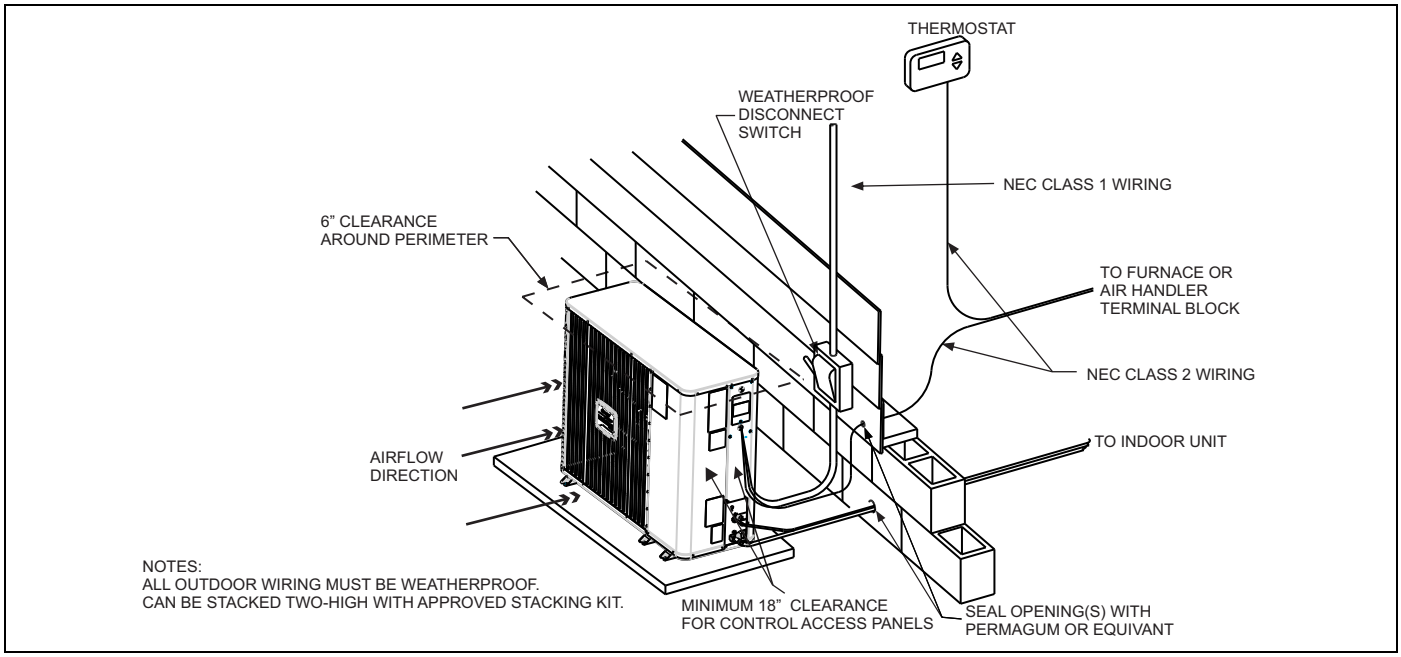

MOUNTING HOLE GRAPHIC

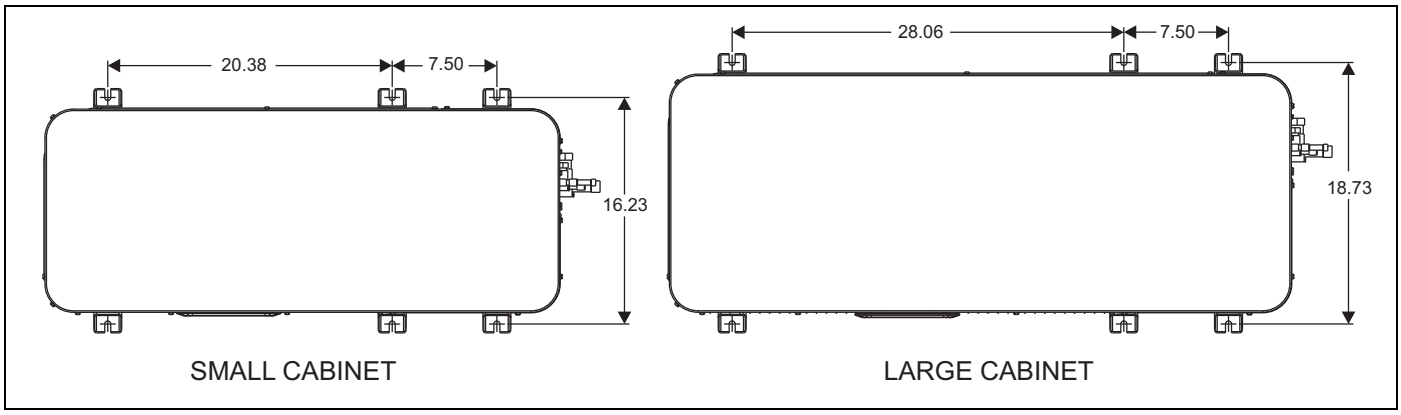

TYPICAL FIELD WIRING

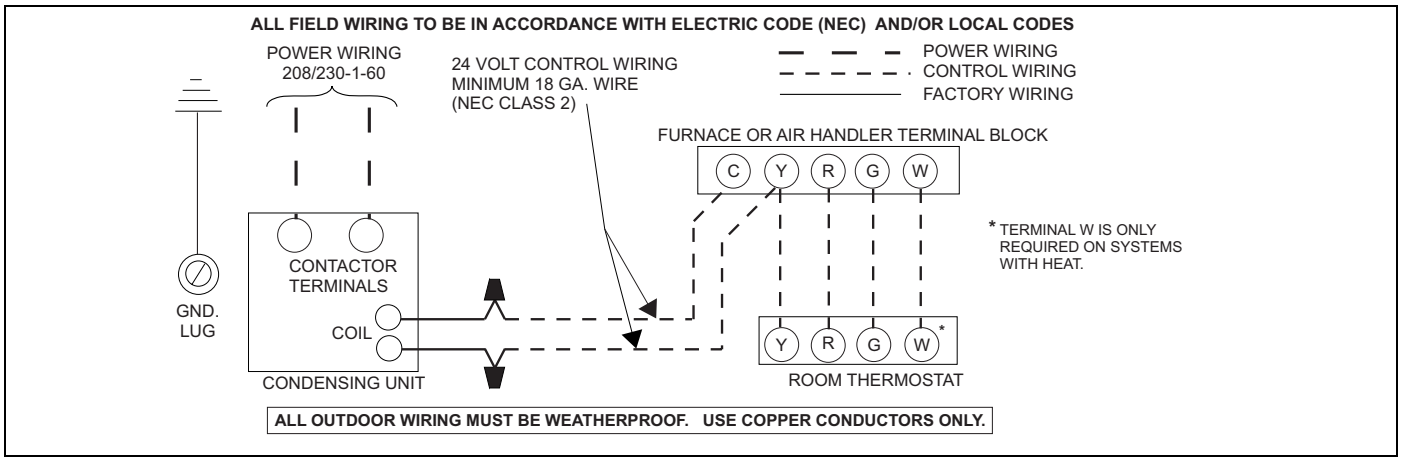

COOLING PERFORMANCE DATA

AIR CONDITIONER MODEL NO.		TCHD18S41S3														
INDOOR COIL MODEL NO.		FC/MC/PC24														
CONDENSING ENTERING AIR TEMPERATURE	IDCFM	450					600					750				
	ID DB (°F)	80	80	75	80	80	80	80	75	80	80	80	80	75	80	80
	ID WB (°F)	57	62	62	67	72	57	62	62	67	72	57	62	62	67	72
65	T.C.	17.3	18.2	18.6	19.7	21.5	18.9	19.0	19.2	20.6	22.5	20.4	19.7	19.8	21.5	23.4
	S.C.	16.6	14.5	12.6	12.2	9.9	18.0	16.9	14.3	14.2	10.7	19.4	19.3	15.9	16.2	11.6
	KW	1.07	1.08	1.09	1.08	1.07	1.07	1.07	1.09	1.07	1.07	1.07	1.07	1.08	1.07	1.08
75	T.C.	16.2	17.3	17.8	18.9	20.7	17.8	18.2	18.4	19.7	21.5	19.4	19.1	19.0	20.5	22.3
	S.C.	15.7	13.9	12.2	11.8	9.6	17.2	16.4	13.9	13.7	10.5	18.7	18.8	15.6	15.6	11.4
	KW	1.28	1.28	1.28	1.27	1.25	1.27	1.27	1.27	1.26	1.25	1.26	1.26	1.27	1.26	1.26
85	T.C.	15.1	16.5	16.9	18.1	20.0	16.7	17.5	17.6	18.9	20.5	18.3	18.5	18.2	19.6	21.1
	S.C.	14.8	13.3	11.8	11.4	9.3	16.4	15.8	13.5	13.1	10.2	18.0	18.4	15.3	14.9	11.2
	KW	1.48	1.48	1.47	1.46	1.44	1.46	1.46	1.46	1.45	1.43	1.44	1.44	1.46	1.44	1.43
95	T.C.	14.0	15.7	16.1	17.3	19.2	15.6	16.8	16.8	18.0	19.6	17.3	18.0	17.4	18.7	19.9
	S.C.	14.0	12.7	11.3	11.0	8.9	15.6	15.3	13.1	12.6	10.0	17.3	17.9	14.9	14.2	11.0
	KW	1.68	1.68	1.66	1.64	1.62	1.65	1.66	1.65	1.64	1.61	1.63	1.63	1.64	1.63	1.61
105	T.C.	13.4	14.5	14.9	16.0	18.1	14.8	15.6	15.6	16.8	18.5	16.3	16.7	16.2	17.6	18.9
	S.C.	13.3	12.2	10.7	10.4	8.5	14.8	14.5	12.4	12.0	9.5	16.3	16.7	14.1	13.7	10.5
	KW	2.16	2.12	2.11	2.12	1.93	2.08	2.06	2.07	2.04	1.92	1.99	1.99	2.02	1.95	1.91
115	T.C.	12.7	13.5	13.7	14.7	16.9	14.0	14.5	14.4	15.6	17.4	15.3	15.6	15.1	16.5	17.9
	S.C.	12.6	11.6	10.0	9.8	8.0	14.0	13.6	11.6	11.5	9.0	15.3	15.6	13.2	13.2	10.0
	KW	2.63	2.54	2.55	2.58	2.23	2.48	2.44	2.47	2.42	2.21	2.34	2.34	2.40	2.27	2.20
125	T.C.	12.1	12.4	12.6	13.4	15.8	13.2	13.4	13.2	14.4	16.3	14.3	14.4	13.9	15.5	16.8
	S.C.	12.0	11.1	9.4	9.2	7.6	13.1	12.8	10.9	10.9	8.5	14.3	14.4	12.4	12.7	9.5
	KW	3.10	2.97	3.00	3.04	2.53	2.89	2.83	2.88	2.81	2.51	2.69	2.68	2.77	2.58	2.49

NOTE: ALL CAPACITIES INCLUDE INDOOR FAN HEAT. KW VALUES ARE FOR THE SYSTEM (OUTDOOR + INDOOR).

Multipliers for determining the performance with other indoor sections.

NOTE: For dry bulb temperatures different than those listed (between 73-87 °F), sensible capacity increases by 1060 BTUH per 1000 CFM per degree above the listed temperature and decreases by 1060 BTUH per 1000 CFM per degree below the listed temperature.

Air Handlers	Coils	T.C.	S.C.	KW
–	FC/MC/PC24	1.00	1.00	1.00
–	FC/MC/PC32	1.01	1.00	1.00
–	FC/MC/PC35	1.01	1.00	1.00
–	FC/MC/PC37	1.02	1.01	1.00
–	HD24	1.04	1.02	1.01
–	UC24	1.00	0.99	1.00
AHE18B	–	1.01	1.02	0.92
AHE24B	–	1.02	1.03	0.91
AHE30B	–	1.02	1.03	0.91
AHE36C	–	1.08	1.16	0.93
AHR18B	–	0.99	1.02	0.99

Air Handlers	Coils	T.C.	S.C.	KW
AHV18B	-	1.00	1.01	0.96
AHV24B	-	1.01	1.02	0.95
AHV30B	-	1.02	1.10	0.96
AHV36C	-	1.03	1.09	0.95
AV*24	–	1.01	1.04	0.96
AV*36	–	1.06	1.10	0.97
MV12B	FC/MC24B	1.02	1.02	0.93
MV12B	FC/MC35B	1.02	1.04	0.93
MX12B	FC/MC24B	1.03	1.08	0.91
MX12B	FC/MC35B	1.05	1.10	0.91

Continued on next page.

Furnaces	Coils	T.C.	S.C.	KW
T*(8,L)C*A12	FC/MC/PC18A	1.01	1.10	0.92
T*(8,L)C*A12	FC/MC/PC24A	1.03	1.06	0.93
T*(8,L)C*A12	FC/MC/PC32A	1.02	1.04	0.92
T*(8,L)C*A12	FC/MC/PC37A	1.04	1.07	0.93
T*(8,L)C*A12	HD24	1.06	1.10	0.93
T*(8,L)C*A12	HD36	1.03	1.02	0.92
T*(8,L)C*A12	UC18A	1.01	1.11	0.92
T*(8,L)C*A12	UC24A	1.03	1.06	0.93
T*(8,L)C*B12	FC/MC/PC18B	0.99	1.09	0.91
T*(8,L)C*B12	FC/MC/PC24B	1.02	1.03	0.91
T*(8,L)C*B12	FC/MC/PC35B	1.03	1.06	0.92
T*(8,L)C*B12	HD24	1.06	1.06	0.91
T*(8,L)C*B12	HD36	1.03	1.02	0.92
T*(8,L)C*B12	UC18B	1.00	1.10	0.91
T*(8,L)C*B12	UC24B	1.02	1.04	0.90
T*(8,L)C*C16	FC/MC/PC35C	1.03	1.06	0.91
T*(8,L)C*C16	HD36	1.03	1.02	0.91
T*(8,L)V*A12	FC/MC/PC24A	1.03	1.06	0.93
T*(8,L)V*A12	FC/MC/PC32A	1.02	1.04	0.92
T*(8,L)V*A12	FC/MC/PC37A	1.04	1.07	0.93
T*(8,L)V*A12	HD24	1.06	1.10	0.93
T*(8,L)V*A12	HD36	1.03	1.02	0.92
T*(8,L)V*A12	UC24A	1.03	1.06	0.93
T*(8,L)V*B12	FC/MC/PC24B	1.02	1.03	0.91
T*(8,L)V*B12	FC/MC/PC35B	1.03	1.06	0.92
T*(8,L)V*B12	HD24	1.06	1.06	0.91
T*(8,L)V*B12	HD36	1.03	1.02	0.92
T*(8,L)V*B12	UC24B	1.02	1.04	0.90
T*(8,L)V*C16	FC/MC/PC35C	1.03	1.06	0.91
T*(8,L)V*C16	HD36	1.03	1.02	0.91
T*(8,L)X*A12	FC/MC/PC24A	1.02	1.04	0.94
T*(8,L)X*A12	FC/MC/PC32A	1.02	1.04	0.94
T*(8,L)X*A12	HD24	1.06	1.10	0.95
T*(8,L)X*A12	UC24A	1.02	1.03	0.94
T*(8,L)X*B12	FC/MC/PC24B	1.02	1.04	0.94
T*(8,L)X*B12	HD24	1.03	1.13	0.95
T*(8,L)X*B12	UC24B	1.02	1.03	0.94
T*(8,L)X*C16	HD24	1.01	1.11	0.96

Furnaces	Coils	T.C.	S.C.	KW
T*9(C,V)*B12	FC/MC/PC24B	1.03	1.06	0.92
T*9(C,V)*B12	FC/MC/PC35B	1.02	1.02	0.91
T*9(C,V)*B12	HD24	1.07	1.10	0.92
T*9(C,V)*B12	HD36	1.03	1.02	0.92
T*9(C,V)*B12	UC24B	1.03	1.06	0.91
T*9(C,V)*C16	FC/MC/PC35C	1.03	1.06	0.92
T*9(C,V)*C16	HD36	1.03	1.02	0.91
T*9X*A10	FC/MC/PC18A	0.99	0.98	0.95
T*9X*A10	FC/MC/PC24A	1.02	1.02	0.94
T*9X*A10	FC/MC/PC32A	1.02	1.02	0.95
T*9X*A10	FC/MC/PC37A	1.03	1.02	0.94
T*9X*B12	FC/MC/PC24B	1.03	1.05	0.94
T*9X*B12	HD24	1.06	1.10	0.95
T*9X*B12	UC24B	1.03	1.06	0.94
T*9V*A10	FC/MC/PC18A	0.99	0.98	0.95
T*9V*A10	FC/MC/PC24A	1.02	1.02	0.95
T*9V*A10	FC/MC/PC32A	1.01	1.02	0.95
T*9V*A10	FC/MC/PC37A	1.03	1.02	0.96
Y*(8,L)C*A12	FC/MC/PC24A	1.03	1.06	0.93
Y*(8,L)C*A12	FC/MC/PC32A	1.02	1.04	0.92
Y*(8,L)C*A12	FC/MC/PC37A	1.04	1.07	0.93
Y*(8,L)C*A12	HD24	1.06	1.10	0.93
Y*(8,L)C*A12	HD36	1.03	1.02	0.92
Y*(8,L)C*A12	UC24A	1.03	1.06	0.93
Y*(8,L)C*B12	FC/MC/PC24B	1.02	1.03	0.91
Y*(8,L)C*B12	FC/MC/PC35B	1.03	1.06	0.92
Y*(8,L)C*B12	HD24	1.06	1.06	0.91
Y*(8,L)C*B12	HD36	1.03	1.02	0.92
Y*(8,L)C*B12	UC24B	1.02	1.04	0.90
Y*(8,L)C*C16	FC/MC/PC35C	1.03	1.06	0.91
Y*(8,L)C*C16	HD36	1.03	1.02	0.91
Y*9C*B12	FC/MC/PC24B	1.03	1.06	0.92
Y*9C*B12	FC/MC/PC35B	1.02	1.02	0.91
Y*9C*B12	HD24	1.07	1.10	0.92
Y*9C*B12	HD36	1.03	1.02	0.92
Y*9C*B12	UC24B	1.03	1.06	0.91
Y*9C*C16	FC/MC/PC35C	1.03	1.06	0.92
Y*9C*C16	HD36	1.03	1.02	0.91

COOLING PERFORMANCE DATA

AIR CONDITIONER MODEL NO.		TCHD24S41S3														
INDOOR COIL MODEL NO.		FC/MC/PC24														
CONDENSING ENTERING AIR TEMPERATURE	IDCFM	600					800					1000				
	ID DB (°F)	80	80	75	80	80	80	80	75	80	80	80	80	75	80	80
	ID WB (°F)	57	62	62	67	72	57	62	62	67	72	57	62	62	67	72
65	T.C.	19.8	23.1	22.5	24.9	29.0	22.4	23.8	23.6	25.9	29.9	25.0	24.6	24.8	27.0	30.9
	S.C.	19.8	19.1	15.9	15.9	12.8	22.4	21.6	18.3	17.9	14.0	25.0	24.0	20.7	20.0	15.2
	KW	1.32	1.32	1.34	1.36	1.36	1.35	1.32	1.35	1.37	1.34	1.37	1.33	1.36	1.38	1.33
75	T.C.	18.9	21.9	21.1	23.9	28.0	21.4	22.9	22.4	25.0	28.8	24.0	23.9	23.7	26.0	29.5
	S.C.	18.9	18.7	15.4	15.5	12.3	21.4	21.2	17.9	17.5	13.6	24.0	23.7	20.3	19.6	14.9
	KW	1.59	1.58	1.58	1.60	1.59	1.60	1.58	1.59	1.61	1.58	1.61	1.58	1.60	1.62	1.57
85	T.C.	18.0	20.8	19.6	23.0	27.0	20.5	22.0	21.1	24.0	27.6	23.0	23.2	22.6	25.0	28.2
	S.C.	18.0	18.2	15.0	15.1	11.9	20.5	20.8	17.4	17.2	13.3	23.0	23.2	19.9	19.3	14.6
	KW	1.85	1.85	1.83	1.84	1.82	1.85	1.85	1.84	1.85	1.82	1.85	1.84	1.84	1.86	1.81
95	T.C.	17.0	19.6	18.2	22.0	26.1	19.5	21.1	19.9	23.0	26.5	22.0	22.5	21.5	24.0	26.9
	S.C.	17.0	17.8	14.5	14.7	11.4	19.5	20.4	17.0	16.8	12.9	22.0	22.5	19.5	18.9	14.4
	KW	2.11	2.12	2.07	2.08	2.06	2.10	2.11	2.08	2.09	2.05	2.09	2.10	2.09	2.10	2.05
105	T.C.	16.2	18.8	17.8	21.7	25.4	18.6	20.1	19.1	22.4	25.6	21.1	21.4	20.4	23.1	25.8
	S.C.	16.2	17.1	14.1	14.2	11.2	18.6	19.3	16.4	16.4	12.6	21.1	21.4	18.7	18.5	14.0
	KW	2.51	2.57	2.48	2.41	2.37	2.44	2.49	2.46	2.40	2.37	2.38	2.41	2.45	2.39	2.37
115	T.C.	15.3	18.0	17.3	21.4	24.8	17.8	19.2	18.3	21.7	24.8	20.3	20.3	19.3	22.1	24.8
	S.C.	15.3	16.4	13.6	13.8	10.9	17.8	18.3	15.8	15.9	12.3	20.3	20.1	18.0	18.1	13.7
	KW	2.89	3.01	2.87	2.72	2.67	2.78	2.87	2.84	2.69	2.67	2.67	2.72	2.81	2.66	2.67
125	T.C.	14.4	17.2	16.9	21.1	24.2	16.9	18.2	17.6	21.1	24.0	19.4	19.2	18.3	21.2	23.7
	S.C.	14.4	15.8	13.2	13.3	10.7	16.9	17.3	15.2	15.5	12.0	19.4	18.8	17.2	17.7	13.3
	KW	3.28	3.46	3.27	3.04	2.98	3.12	3.24	3.22	2.99	2.98	2.95	3.03	3.17	2.94	2.98

NOTE: ALL CAPACITIES INCLUDE INDOOR FAN HEAT. KW VALUES ARE FOR THE SYSTEM (OUTDOOR + INDOOR).

Multipliers for determining the performance with other indoor sections.

NOTE: For dry bulb temperatures different than those listed (between 73-87 °F), sensible capacity increases by 1060 BTUH per 1000 CFM per degree above the listed temperature and decreases by 1060 BTUH per 1000 CFM per degree below the listed temperature.

Air Handlers	Coils	T.C.	S.C.	KW
–	FC/MC/PC24	1.00	1.00	1.00
–	FC/MC/PC32	1.00	1.01	1.00
–	FC/MC/PC35	1.00	1.01	1.00
–	FC/MC/PC37	1.03	1.03	1.01
–	FC/MC/PC43	1.03	1.03	1.01
–	FC/MC/PC48	1.03	1.04	1.03
–	UC24	1.00	1.01	1.00
AHE24B	–	1.03	1.04	0.93
AHE30B	–	1.03	1.04	0.93
AHE36C	–	1.06	1.10	0.93
AHE42D	–	1.05	1.09	0.91
AHR24B	–	1.01	0.99	1.01
AHV24B	-	1.02	0.99	0.95
AHV30B	-	1.03	1.03	0.96
AHV36C	-	1.04	1.05	0.96
AV*24	–	1.01	1.02	0.94
AV*36	–	1.03	1.02	0.93
MV12B	FC/MC24B	1.03	1.02	0.92
MV12B	FC/MC35B	1.03	1.03	0.93
MV12B	FC/MC43B	1.05	1.05	0.93
MV12D	FC/MC48D	1.07	1.11	0.92
MV16C	FC/MC35C	1.03	1.03	0.93
MV16C	FC/MC43C	1.05	1.05	0.92

Air Handlers	Coils	T.C.	S.C.	KW
MX12B	FC/MC24B	1.03	1.03	0.90
MX12B	FC/MC35B	1.04	1.05	0.90
MX12B	FC/MC43B	1.03	1.03	0.91
MX12D	FC/MC48D	1.07	1.12	0.92

Furnaces	Coils	T.C.	S.C.	KW
T*(8,L)C*A12	FC/MC/PC24A	1.03	1.03	0.93
T*(8,L)C*A12	FC/MC/PC32A	1.03	1.04	0.94
T*(8,L)C*A12	FC/MC/PC37A	1.04	1.05	0.94
T*(8,L)C*A12	HD24	1.04	1.05	0.93
T*(8,L)C*A12	HD36	1.02	1.00	0.92
T*(8,L)C*A12	UC24A	1.03	1.04	0.93
T*(8,L)C*B12	FC/MC/PC24B	1.03	1.04	0.92
T*(8,L)C*B12	FC/MC/PC35B	1.03	1.02	0.93
T*(8,L)C*B12	FC/MC/PC43B	1.04	1.04	0.92
T*(8,L)C*B12	HD24	1.04	1.05	0.92
T*(8,L)C*B12	HD36	1.02	0.98	0.92
T*(8,L)C*B12	UC24B	1.03	1.04	0.92
T*(8,L)C*C16	FC/MC/PC35C	1.04	1.08	0.92
T*(8,L)C*C16	FC/MC/PC43C	1.06	1.13	0.93
T*(8,L)C*C16	FC/MC/PC48C	1.02	1.05	0.91
T*(8,L)C*C16	HD36	1.03	1.04	0.92
T*(8,L)C*C16	UC48C	1.02	1.03	0.91
T*(8,L)C*C20	FC/MC/PC35C	1.03	1.02	0.90

Continued on next page.

Furnaces	Coils	T.C.	S.C.	KW
T*(8,L)C*C20	FC/MC/PC43C	1.04	1.04	0.90
T*(8,L)C*C20	HD36	1.02	0.98	0.90
T*(8,L)V*A12	FC/MC/PC24A	1.03	1.03	0.93
T*(8,L)V*A12	FC/MC/PC32A	1.03	1.04	0.94
T*(8,L)V*A12	FC/MC/PC37A	1.04	1.05	0.94
T*(8,L)V*A12	HD24	1.04	1.05	0.93
T*(8,L)V*A12	HD36	1.02	1.00	0.92
T*(8,L)V*A12	UC24A	1.03	1.04	0.93
T*(8,L)V*B12	FC/MC/PC24B	1.03	1.04	0.92
T*(8,L)V*B12	FC/MC/PC35B	1.03	1.02	0.93
T*(8,L)V*B12	FC/MC/PC43B	1.04	1.04	0.92
T*(8,L)V*B12	HD24	1.04	1.05	0.92
T*(8,L)V*B12	HD36	1.02	0.98	0.92
T*(8,L)V*B12	UC24B	1.03	1.04	0.92
T*(8,L)V*C16	FC/MC/PC35C	1.04	1.08	0.92
T*(8,L)V*C16	FC/MC/PC43C	1.06	1.13	0.93
T*(8,L)V*C16	FC/MC/PC48C	1.02	1.05	0.91
T*(8,L)V*C16	HD36	1.03	1.04	0.92
T*(8,L)V*C16	UC48C	1.02	1.03	0.91
T*(8,L)V*C20	FC/MC/PC35C	1.03	1.02	0.90
T*(8,L)V*C20	FC/MC/PC43C	1.04	1.04	0.90
T*(8,L)V*C20	HD36	1.02	0.98	0.90
T*(8,L)X*A12	FC/MC/PC24A	1.02	1.03	0.95
T*(8,L)X*A12	FC/MC/PC32A	1.03	1.05	0.94
T*(8,L)X*A12	FC/MC/PC37A	1.04	1.08	0.96
T*(8,L)X*A12	HD36	1.00	1.01	0.94
T*(8,L)X*A12	UC24A	1.02	1.02	0.95
T*(8,L)X*B12	FC/MC/PC24B	1.03	1.05	0.94
T*(8,L)X*B12	FC/MC/PC35B	1.03	1.06	0.94
T*(8,L)X*B12	FC/MC/PC43B	1.04	1.10	0.94
T*(8,L)X*B12	HD36	1.00	1.01	0.94
T*(8,L)X*B12	UC24B	1.03	1.05	0.94
T*(8,L)X*C16	FC/MC/PC35C	0.99	0.95	0.93
T*(8,L)X*C16	FC/MC/PC43C	1.00	0.96	0.94
T*(8,L)X*C16	FC/MC/PC48C	1.02	0.99	0.93
T*(8,L)X*C16	HD36	1.00	1.01	0.94
T*(8,L)X*C16	UC48C	1.02	1.00	0.93
T*(8,L)X*C20	FC/MC/PC35C	1.03	1.08	0.94
T*9(C,V)*B12	FC/MC/PC24B	1.02	1.02	0.93
T*9(C,V)*B12	FC/MC/PC35B	1.03	1.05	0.94
T*9(C,V)*B12	FC/MC/PC43B	1.04	1.06	0.93
T*9(C,V)*B12	HD24	1.04	1.05	0.93
T*9(C,V)*B12	HD36	1.02	1.00	0.92
T*9(C,V)*B12	UC24B	1.02	1.03	0.93
T*9(C,V)*C16	FC/MC/PC35C	1.05	1.10	0.94
T*9(C,V)*C16	FC/MC/PC43C	1.05	1.07	0.93
T*9(C,V)*C16	FC/MC/PC48C	1.03	1.09	0.93
T*9(C,V)*C16	HD36	1.03	1.00	0.91
T*9(C,V)*C16	UC48C	1.03	1.07	0.93
T*9(C,V)*C20	FC/MC/PC35C	1.03	1.02	0.91
T*9(C,V)*C20	FC/MC/PC43C	1.06	1.12	0.93
T*9(C,V)*C20	HD36	1.02	0.99	0.91
T*9X*A10	FC/MC/PC24A	1.01	1.00	0.94

Furnaces	Coils	T.C.	S.C.	KW
T*9X*A10	FC/MC/PC32A	1.01	1.01	0.94
T*9X*A10	FC/MC/PC37A	1.02	1.02	0.95
T*9X*B12	FC/MC/PC24B	1.02	1.03	0.95
T*9X*B12	FC/MC/PC35B	1.03	1.05	0.95
T*9X*B12	FC/MC/PC43B	1.04	1.07	0.96
T*9X*B12	HD36	1.00	1.01	0.94
T*9X*B12	UC24B	1.02	1.02	0.95
T*9X*C16	FC/MC/PC35C	1.02	1.01	0.93
T*9X*C16	FC/MC/PC43C	1.03	1.02	0.94
T*9X*C16	FC/MC/PC48C	1.03	1.04	0.92
T*9X*C16	UC48C	1.03	1.05	0.92
T*9X*C20	FC/MC/PC35C	1.03	1.05	0.94
T*9X*C20	FC/MC/PC43C	1.04	1.06	0.96
T*9X*C20	FC/MC/PC48C	1.04	1.07	0.96
T*9X*C20	UC48C	1.04	1.07	0.96
T*9V*A10	FC/MC/PC24A	1.00	1.00	0.96
T*9V*A10	FC/MC/PC32A	1.02	1.02	0.97
T*9V*A10	FC/MC/PC37A	1.03	1.04	0.98
Y*(8,L)C*A12	FC/MC/PC24A	1.03	1.03	0.93
Y*(8,L)C*A12	FC/MC/PC32A	1.03	1.04	0.94
Y*(8,L)C*A12	FC/MC/PC37A	1.04	1.05	0.94
Y*(8,L)C*A12	HD24	1.04	1.05	0.93
Y*(8,L)C*A12	HD36	1.02	1.00	0.92
Y*(8,L)C*A12	UC24A	1.03	1.04	0.93
Y*(8,L)C*B12	FC/MC/PC24B	1.03	1.04	0.92
Y*(8,L)C*B12	FC/MC/PC35B	1.03	1.02	0.93
Y*(8,L)C*B12	FC/MC/PC43B	1.04	1.04	0.92
Y*(8,L)C*B12	HD24	1.04	1.05	0.92
Y*(8,L)C*B12	HD36	1.02	0.98	0.92
Y*(8,L)C*B12	UC24B	1.03	1.04	0.92
Y*(8,L)C*C16	FC/MC/PC35C	1.04	1.08	0.92
Y*(8,L)C*C16	FC/MC/PC43C	1.06	1.13	0.93
Y*(8,L)C*C16	FC/MC/PC48C	1.02	1.05	0.91
Y*(8,L)C*C16	HD36	1.03	1.04	0.92
Y*(8,L)C*C16	UC48C	1.02	1.03	0.91
Y*(8,L)C*C20	FC/MC/PC35C	1.03	1.02	0.90
Y*(8,L)C*C20	FC/MC/PC43C	1.04	1.04	0.90
Y*(8,L)C*C20	HD36	1.02	0.98	0.90
Y*9C*B12	FC/MC/PC24B	1.02	1.02	0.93
Y9C*B12	FC/MC/PC35B	1.03	1.05	0.94
Y*9C*B12	FC/MC/PC43B	1.04	1.06	0.93
Y*9C*B12	HD24	1.04	1.05	0.93
Y*9C*B12	HD36	1.02	1.00	0.92
Y*9C*B12	UC24B	1.02	1.03	0.93
Y*9C*C16	FC/MC/PC35C	1.05	1.10	0.94
Y*9C*C16	FC/MC/PC43C	1.05	1.07	0.93
Y*9C*C16	FC/MC/PC48C	1.03	1.09	0.93
Y*9C*C16	HD36	1.03	1.00	0.91
Y*9C*C16	UC48C	1.03	1.07	0.93
Y*9C*C20	FC/MC/PC35C	1.03	1.02	0.91
Y*9C*C20	FC/MC/PC43C	1.06	1.12	0.93
Y*9C*C20	HD36	1.02	0.99	0.91

COOLING PERFORMANCE DATA

AIR CONDITIONER MODEL NO.		TCHD30S41S3														
INDOOR COIL MODEL NO.		FC/MC/PC35														
CONDENSING ENTERING AIR TEMPERATURE	IDCFM	800					1000					1200				
	ID DB (°F)	80	80	75	80	80	80	80	75	80	80	80	80	75	80	80
	ID WB (°F)	57	62	62	67	72	57	62	62	67	72	57	62	62	67	72
65	T.C.	27.3	28.7	28.9	30.5	31.8	28.8	29.9	29.8	31.6	33.4	30.3	31.0	30.7	32.8	35.0
	S.C.	26.6	24.5	20.7	20.5	15.9	28.2	27.4	23.2	22.6	17.2	29.7	30.4	25.7	24.7	18.5
	KW	1.61	1.64	1.61	1.64	1.63	1.63	1.63	1.61	1.64	1.64	1.65	1.62	1.61	1.64	1.65
75	T.C.	26.2	27.0	27.1	29.4	31.2	27.8	28.3	28.3	30.4	32.2	29.5	29.5	29.5	31.5	33.2
	S.C.	25.6	23.9	19.9	19.8	15.4	27.2	26.4	22.3	22.0	16.8	28.8	28.9	24.6	24.1	18.1
	KW	1.88	1.88	1.89	1.88	1.86	1.87	1.87	1.88	1.87	1.86	1.87	1.87	1.88	1.87	1.86
85	T.C.	25.1	25.3	25.2	28.3	30.6	26.8	26.7	26.7	29.2	31.0	28.6	28.0	28.3	30.1	31.4
	S.C.	24.5	23.2	19.1	19.2	15.0	26.2	25.3	21.3	21.3	16.3	28.0	27.4	23.6	23.5	17.7
	KW	2.15	2.12	2.18	2.11	2.09	2.12	2.12	2.16	2.10	2.09	2.09	2.12	2.14	2.10	2.08
95	T.C.	23.9	23.7	23.3	27.2	30.0	25.8	25.1	25.2	28.0	29.8	27.8	26.5	27.1	28.8	29.6
	S.C.	23.5	22.6	18.2	18.5	14.5	25.3	24.3	20.4	20.7	15.9	27.1	25.9	22.5	22.9	17.3
	KW	2.41	2.36	2.46	2.34	2.32	2.37	2.36	2.43	2.33	2.31	2.32	2.36	2.41	2.32	2.30
105	T.C.	22.4	22.6	22.2	25.0	27.8	24.3	24.1	23.8	26.1	27.8	26.2	25.6	25.3	27.3	27.9
	S.C.	21.9	21.5	17.6	17.8	13.9	23.7	23.1	19.7	20.0	15.3	25.5	24.8	21.7	22.2	16.7
	KW	2.93	2.96	3.05	2.84	2.70	2.85	2.88	3.01	2.80	2.69	2.76	2.80	2.97	2.76	2.67
115	T.C.	20.9	21.5	21.2	22.9	25.6	22.8	23.1	22.4	24.4	26.0	24.7	24.7	23.5	25.8	26.3
	S.C.	20.5	20.4	17.0	17.1	13.4	22.2	22.0	19.0	19.3	14.7	24.0	23.6	20.9	21.5	16.1
	KW	3.44	3.54	3.61	3.32	3.07	3.31	3.38	3.56	3.25	3.05	3.19	3.22	3.51	3.18	3.03
125	T.C.	19.5	20.4	20.1	20.7	23.4	21.3	22.1	20.9	22.6	24.1	23.2	23.9	21.8	24.4	24.7
	S.C.	19.0	19.3	16.4	16.4	12.8	20.7	20.9	18.3	18.6	14.2	22.4	22.5	20.1	20.8	15.5
	KW	3.94	4.13	4.18	3.81	3.44	3.78	3.88	4.12	3.70	3.42	3.62	3.63	4.06	3.60	3.39

NOTE: ALL CAPACITIES INCLUDE INDOOR FAN HEAT. KW VALUES ARE FOR THE SYSTEM (OUTDOOR + INDOOR).

Multipliers for determining the performance with other indoor sections.

NOTE: For dry bulb temperatures different than those listed (between 73-87 °F), sensible capacity increases by 1060 BTUH per 1000 CFM per degree above the listed temperature and decreases by 1060 BTUH per 1000 CFM per degree below the listed temperature.

Air Handlers	Coils	T.C.	S.C.	KW
–	FC/MC/PC32	1.00	1.00	1.00
–	FC/MC/PC35	1.00	1.00	1.00
–	FC/MC/PC37	1.01	1.02	1.00
–	FC/MC/PC43	1.01	1.02	1.00
–	FC/MC/PC48	1.02	1.03	1.00
–	HD36	0.99	0.96	1.00
–	UC48	0.96	0.96	1.00
AHE30B	–	1.01	1.02	0.94
AHE36C	–	1.04	1.05	0.92
AHE42D	–	1.05	1.07	0.90
AHR30B	–	1.01	1.05	1.01
AHR36B	–	1.02	1.05	1.02
AHV30B	-	1.01	1.00	0.99
AHV36C	-	1.02	1.00	0.94
AHV42D	-	1.06	1.10	0.96

Air Handlers	Coils	T.C.	S.C.	KW
AV*36	–	1.03	1.02	0.93
MV12B	FC/MC35B	1.02	1.02	0.93
MV12B	FC/MC43B	1.04	1.04	0.93
MV16C	FC/MC35C	1.02	1.02	0.93
MV16C	FC/MC43C	1.04	1.04	0.92
MV16C	FC/MC48C	1.05	1.05	0.92
MX12B	FC/MC35B	1.03	1.07	0.93
MX12B	FC/MC43B	1.04	1.10	0.93
MX16C	FC/MC35C	1.03	1.04	0.90
MX16C	FC/MC43C	1.04	1.06	0.90
MX16C	FC/MC48C	1.05	1.06	0.90

Continued on next page.

Furnaces	Coils	T.C.	S.C.	KW
T*(8,L)C*A12	FC/MC/PC32A	1.00	1.01	0.99
T*(8,L)C*A12	FC/MC/PC37A	1.03	1.04	0.96
T*(8,L)C*A12	HD36	1.00	0.97	0.95
T*(8,L)C*B12	FC/MC/PC35B	1.01	1.02	0.95
T*(8,L)C*B12	FC/MC/PC43B	1.03	1.05	0.94
T*(8,L)C*B12	HD36	1.00	0.98	0.92
T*(8,L)C*C16	FC/MC/PC35C	1.01	1.03	0.93
T*(8,L)C*C16	FC/MC/PC43C	1.04	1.05	0.91
T*(8,L)C*C16	HD36	1.01	0.98	0.93
T*(8,L)C*C20	FC/MC/PC35C	1.03	1.07	0.95
T*(8,L)C*C20	FC/MC/PC43C	1.04	1.05	0.91
T*(8,L)C*C20	HD36	1.01	1.01	0.92
T*(8,L)V*A12	FC/MC/PC32A	1.00	1.01	0.99
T*(8,L)V*A12	FC/MC/PC37A	1.03	1.04	0.96
T*(8,L)V*A12	HD36	1.00	0.97	0.95
T*(8,L)V*B12	FC/MC/PC35B	1.01	1.02	0.95
T*(8,L)V*B12	FC/MC/PC43B	1.03	1.05	0.94
T*(8,L)V*B12	HD36	1.00	0.98	0.92
T*(8,L)V*C16	FC/MC/PC35C	1.01	1.03	0.93
T*(8,L)V*C16	FC/MC/PC43C	1.04	1.05	0.91
T*(8,L)V*C16	HD36	1.01	0.98	0.93
T*(8,L)V*C20	FC/MC/PC35C	1.03	1.07	0.95
T*(8,L)V*C20	FC/MC/PC43C	1.04	1.05	0.91
T*(8,L)V*C20	HD36	1.01	1.01	0.92
T*(8,L)X*A12	FC/MC/PC32A	1.00	1.00	0.98
T*(8,L)X*A12	FC/MC/PC37A	1.03	1.07	0.95
T*(8,L)X*A12	HD36	1.00	1.01	0.96
T*(8,L)X*B12	FC/MC/PC35B	1.01	1.04	0.95
T*(8,L)X*B12	FC/MC/PC43B	1.03	1.04	1.01
T*(8,L)X*B12	HD36	1.00	1.01	0.96
T*(8,L)X*C16	FC/MC/PC35C	1.01	1.04	0.94
T*(8,L)X*C16	HD36	1.01	1.01	0.95
T*(8,L)X*C16	UC48C	0.94	0.91	0.91
T*(8,L)X*C20	FC/MC/PC35C	0.99	0.97	0.92
T*(8,L)X*C20	FC/MC/PC43C	0.94	1.02	0.91
T*(8,L)X*C20	FC/MC/PC48C	1.03	1.00	0.91
T*(8,L)X*C20	UC48C	0.98	0.97	0.92
T*9(C,V)*B12	FC/MC/PC35B	1.01	1.04	0.97

Furnaces	Coils	T.C.	S.C.	KW
T*9(C,V)*B12	FC/MC/PC43B	1.03	1.04	0.96
T*9(C,V)*B12	HD36	1.00	0.98	0.93
T*9(C,V)*C16	FC/MC/PC35C	1.01	1.03	0.93
T*9(C,V)*C16	FC/MC/PC43C	1.03	1.04	0.94
T*9(C,V)*C16	HD36	1.01	0.98	0.93
T*9(C,V)*C20	FC/MC/PC35C	1.01	1.03	0.93
T*9(C,V)*C20	FC/MC/PC43C	1.04	1.05	0.92
T*9(C,V)*C20	HD36	1.00	0.98	0.92
T*9X*A10	FC/MC/PC32A	1.00	1.01	1.02
T*9X*A10	FC/MC/PC37A	1.01	1.17	1.01
T*9X*B12	FC/MC/PC35B	1.01	1.03	0.95
T*9X*B12	FC/MC/PC43B	1.03	1.04	1.01
T*9X*B12	HD36	1.00	1.01	0.96
T*9X*C16	FC/MC/PC35C	1.01	1.03	0.94
T*9X*C16	FC/MC/PC43C	1.03	1.01	1.01
T*9X*C16	FC/MC/PC48C	1.05	1.09	0.95
T*9X*C16	UC48C	0.99	1.00	0.97
Y*(8,L)C*A12	FC/MC/PC32A	1.00	1.01	0.99
Y*(8,L)C*A12	FC/MC/PC37A	1.03	1.04	0.96
Y*(8,L)C*A12	HD36	1.00	0.97	0.95
Y*(8,L)C*B12	FC/MC/PC35B	1.01	1.02	0.95
Y*(8,L)C*B12	FC/MC/PC43B	1.03	1.05	0.94
Y*(8,L)C*B12	HD36	1.00	0.98	0.92
Y*(8,L)C*C16	FC/MC/PC35C	1.01	1.03	0.93
Y*(8,L)C*C16	FC/MC/PC43C	1.04	1.05	0.91
Y*(8,L)C*C16	HD36	1.01	0.98	0.93
Y*(8,L)C*C20	FC/MC/PC35C	1.03	1.07	0.95
Y*(8,L)C*C20	FC/MC/PC43C	1.04	1.05	0.91
Y*(8,L)C*C20	HD36	1.01	1.01	0.92
Y*9C*B12	FC/MC/PC35B	1.01	1.04	0.97
Y*9C*B12	FC/MC/PC43B	1.03	1.04	0.96
Y*9C*B12	HD36	1.00	0.98	0.93
Y*9C*C16	FC/MC/PC35C	1.01	1.03	0.93
Y*9C*C16	FC/MC/PC43C	1.03	1.04	0.94
Y*9C*C16	HD36	1.01	0.98	0.93
Y*9C*C20	FC/MC/PC35C	1.01	1.03	0.93
Y*9C*C20	FC/MC/PC43C	1.04	1.05	0.92
Y*9C*C20	HD36	1.00	0.98	0.92

COOLING PERFORMANCE DATA

AIR CONDITIONER MODEL NO.		TCHD36S41S3														
INDOOR COIL MODEL NO.		FC/MC/PC43														
CONDENSING ENTERING AIR TEMPERATURE	IDCFM	1000					1200					1400				
	ID DB (°F)	80	80	75	80	80	80	80	75	80	80	80	80	75	80	80
	ID WB (°F)	57	62	62	67	72	57	62	62	67	72	57	62	62	67	72
65	T.C.	35.6	35.8	34.7	37.7	37.7	36.8	37.8	36.7	40.3	42.2	38.1	39.7	38.6	42.8	46.7
	S.C.	32.9	30.2	25.1	25.3	17.8	34.5	33.0	28.0	27.7	20.2	36.2	35.7	30.8	30.1	22.7
	KW	1.90	1.92	1.90	1.92	1.95	1.91	1.93	1.90	1.92	1.95	1.92	1.94	1.90	1.92	1.95
75	T.C.	34.2	34.3	32.7	35.3	35.7	35.4	36.3	34.6	38.1	40.3	36.7	38.3	36.5	40.9	44.9
	S.C.	31.5	29.2	24.2	24.1	17.1	33.2	32.0	27.0	26.7	19.6	34.9	34.7	29.8	29.3	22.1
	KW	2.31	2.29	2.30	2.25	2.25	2.29	2.28	2.28	2.25	2.25	2.27	2.27	2.25	2.24	2.25
85	T.C.	32.8	32.8	30.7	33.0	33.7	34.0	34.8	32.5	36.0	38.4	35.3	36.8	34.4	38.9	43.2
	S.C.	30.0	28.2	23.3	22.9	16.5	31.8	31.0	26.0	25.7	19.0	33.6	33.8	28.7	28.4	21.6
	KW	2.72	2.67	2.69	2.57	2.55	2.68	2.64	2.65	2.57	2.55	2.63	2.61	2.61	2.56	2.55
95	T.C.	31.4	31.3	28.7	30.6	31.6	32.7	33.3	30.5	33.8	36.5	33.9	35.3	32.2	37.0	41.4
	S.C.	28.6	27.2	22.4	21.8	15.9	30.4	30.0	25.0	24.7	18.4	32.2	32.8	27.6	27.6	21.0
	KW	3.13	3.04	3.09	2.89	2.85	3.06	2.99	3.03	2.89	2.84	2.99	2.94	2.96	2.88	2.84
105	T.C.	29.9	29.4	27.2	29.0	29.7	31.0	31.1	28.7	31.9	34.3	32.2	32.9	30.2	34.9	38.8
	S.C.	27.3	26.5	21.9	21.2	15.2	28.9	28.8	24.4	24.0	17.7	30.5	31.1	26.9	26.9	20.1
	KW	3.67	3.60	3.71	3.42	3.34	3.58	3.52	3.61	3.41	3.33	3.50	3.44	3.51	3.40	3.32
115	T.C.	28.4	27.6	25.6	27.3	27.8	29.4	29.0	26.9	30.1	32.1	30.5	30.5	28.3	32.9	36.3
	S.C.	25.9	25.9	21.4	20.6	14.6	27.4	27.7	23.8	23.4	16.9	28.9	29.5	26.2	26.1	19.2
	KW	4.20	4.13	4.32	3.94	3.81	4.09	4.03	4.18	3.91	3.79	3.99	3.93	4.05	3.89	3.78
125	T.C.	26.9	25.7	24.1	25.7	25.9	27.8	27.0	25.2	28.3	29.8	28.8	28.2	26.3	30.9	33.8
	S.C.	24.6	25.3	20.9	20.0	14.0	26.0	26.6	23.2	22.7	16.2	27.3	27.8	25.6	25.4	18.3
	KW	4.72	4.67	4.92	4.45	4.28	4.60	4.54	4.75	4.42	4.26	4.49	4.41	4.58	4.39	4.24

NOTE: ALL CAPACITIES INCLUDE INDOOR FAN HEAT. KW VALUES ARE FOR THE SYSTEM (OUTDOOR + INDOOR).

Multipliers for determining the performance with other indoor sections.

NOTE: For dry bulb temperatures different than those listed (between 73-87 °F), sensible capacity increases by 1060 BTUH per 1000 CFM per degree above the listed temperature and decreases by 1060 BTUH per 1000 CFM per degree below the listed temperature.

Air Handlers	Coils	T.C.	S.C.	KW
–	FC/MC/PC37	1.00	1.00	1.00
–	FC/MC/PC43	1.00	1.00	1.00
–	FC/MC/PC48	1.02	1.02	0.99
–	HD48	1.01	1.01	1.00
AHE36C	–	1.02	1.03	0.93
AHE42D	–	1.04	1.04	0.91
AHR36B	–	1.00	1.00	1.02
AHR42C	–	1.02	1.04	1.00
AHV36C	-	1.02	1.04	0.99
AHV42D	-	1.04	1.04	0.95
AHV48D	-	1.02	1.02	0.95

Air Handlers	Coils	T.C.	S.C.	KW
AV*36	–	1.02	1.03	0.94
AV*48	–	0.97	0.98	0.93
MV12B	FC/MC43B	1.02	1.02	0.95
MV12D	FC/MC48D	1.02	1.02	0.92
MV16C	FC/MC43C	1.02	1.03	0.92
MV16C	FC/MC48C	1.04	1.04	0.92
MX12B	FC/MC43B	1.02	1.04	0.95
MX12D	FC/MC48D	1.04	1.06	0.94
MX16C	FC/MC43C	1.02	1.02	0.92
MX16C	FC/MC48C	1.04	1.04	0.91

Continued on next page.

Furnaces	Coils	T.C.	S.C.	KW
T*(8,L)C*A12	FC/MC/PC32A	0.96	0.96	0.96
T*(8,L)C*A12	FC/MC/PC37A	0.98	0.93	0.95
T*(8,L)C*A12	HD36	0.98	0.94	0.98
T*(8,L)C*B12	FC/MC/PC35B	0.99	0.95	0.98
T*(8,L)C*B12	FC/MC/PC43B	1.01	1.02	0.99
T*(8,L)C*B12	HD36	0.98	0.94	0.96
T*(8,L)C*B12	HD48	1.02	1.02	0.96
T*(8,L)C*C16	FC/MC/PC35C	0.99	0.96	0.95
T*(8,L)C*C16	FC/MC/PC43C	1.02	1.03	0.95
T*(8,L)C*C16	FC/MC/PC48C	1.04	1.05	0.93
T*(8,L)C*C16	HD36	0.99	0.95	0.94
T*(8,L)C*C16	HD48	1.03	1.03	0.93
T*(8,L)C*C16	UC48C	0.99	1.00	0.93
T*(8,L)C*C20	FC/MC/PC35C	1.00	0.96	0.93
T*(8,L)C*C20	FC/MC/PC43C	1.02	1.03	0.96
T*(8,L)C*C20	FC/MC/PC48C	1.04	1.05	0.93
T*(8,L)C*C20	HD36	0.99	0.96	0.94
T*(8,L)C*C20	HD48	1.03	1.03	0.92
T*(8,L)C*C20	UC48C	0.99	1.00	0.92
T*(8,L)V*A12	FC/MC/PC37A	0.98	0.93	0.95
T*(8,L)V*B12	FC/MC/PC43B	1.01	1.02	0.99
T*(8,L)V*B12	HD48	1.02	1.02	0.96
T*(8,L)V*C16	FC/MC/PC43C	1.02	1.03	0.95
T*(8,L)V*C16	FC/MC/PC48C	1.04	1.05	0.93
T*(8,L)V*C16	HD48	1.03	1.03	0.93
T*(8,L)V*C16	UC48C	0.99	1.00	0.93
T*(8,L)V*C20	FC/MC/PC43C	1.02	1.03	0.96
T*(8,L)V*C20	FC/MC/PC48C	1.04	1.05	0.93
T*(8,L)V*C20	HD48	1.03	1.03	0.92
T*(8,L)V*C20	UC48C	0.99	1.00	0.92
T*(8,L)X*A12	FC/MC/PC37A	0.98	1.00	0.95
T*(8,L)X*B12	FC/MC/PC43B	1.01	1.04	0.99
T*(8,L)X*C16	FC/MC/PC43C	1.02	1.02	0.95
T*(8,L)X*C16	FC/MC/PC48C	1.03	1.05	0.94
T*(8,L)X*C16	HD48	1.01	1.01	0.95
T*(8,L)X*C16	UC48C	0.97	0.97	0.95
T*(8,L)X*C20	FC/MC/PC43C	1.02	1.06	0.96
T*(8,L)X*C20	FC/MC/PC48C	1.04	1.07	0.96
T*(8,L)X*C20	HD48	1.03	1.05	0.94
T*(8,L)X*C20	UC48C	0.98	1.00	0.96
T*9(C,V)*B12	FC/MC/PC35B	0.99	1.00	0.98
T*9(C,V)*B12	FC/MC/PC43B	1.01	1.02	0.98
T*9(C,V)*B12	HD36	0.99	1.00	0.96
T*9(C,V)*B12	HD48	1.02	1.02	0.96
T*9(C,V)*C16	FC/MC/PC35C	0.99	1.00	0.96
T*9(C,V)*C16	FC/MC/PC43C	1.01	1.02	0.97
T*9(C,V)*C16	FC/MC/PC48C	1.04	1.04	0.95

Furnaces	Coils	T.C.	S.C.	KW
T*9(C,V)*C16	HD36	0.99	1.00	0.94
T*9(C,V)*C16	HD48	1.02	1.02	0.94
T*9(C,V)*C16	UC48C	0.99	1.00	0.94
T*9(C,V)*C20	FC/MC/PC35C	1.01	1.04	0.99
T*9(C,V)*C20	FC/MC/PC43C	1.02	1.03	0.95
T*9(C,V)*C20	FC/MC/PC48C	1.04	1.09	0.97
T*9(C,V)*C20	HD36	1.00	1.01	0.97
T*9(C,V)*C20	HD48	1.03	1.06	0.97
T*9(C,V)*C20	UC48C	1.00	1.03	0.98
T*9(C,V)*D20	FC/MC/PC48D	1.04	1.06	0.94
T*9(C,V)*D20	HD48	1.03	1.04	0.94
T*9(C,V)*D20	UC48D	0.99	1.00	0.94
T*9X*B12	FC/MC/PC43B	1.01	1.04	0.99
T*9X*C16	FC/MC/PC43C	1.01	1.05	0.97
T*9X*C16	FC/MC/PC48C	1.04	1.06	0.97
T*9X*C16	UC48C	0.98	0.98	0.97
T*9X*C20	FC/MC/PC43C	1.01	1.02	0.97
T*9X*C20	FC/MC/PC48C	1.02	1.04	0.96
T*9X*C20	HD48	1.03	1.05	0.94
T*9X*C20	UC48C	0.96	0.96	0.96
T*9X*D20	FC/MC/PC48D	1.03	1.04	0.96
T*9X*D20	HD48	1.03	1.06	0.94
T*9X*D20	UC48D	0.96	0.96	0.96
Y*(8,L)C*A12	FC/MC/PC37A	0.98	0.93	0.95
Y*(8,L)C*B12	FC/MC/PC43B	1.01	1.02	0.99
Y*(8,L)C*B12	HD48	1.02	1.02	0.96
Y*(8,L)C*C16	FC/MC/PC43C	1.02	1.03	0.95
Y*(8,L)C*C16	FC/MC/PC48C	1.04	1.05	0.93
Y*(8,L)C*C16	HD48	1.03	1.03	0.93
Y*(8,L)C*C16	UC48C	0.99	1.00	0.93
Y*(8,L)C*C20	FC/MC/PC43C	1.02	1.03	0.96
Y*(8,L)C*C20	FC/MC/PC48C	1.04	1.05	0.93
Y*(8,L)C*C20	HD48	1.03	1.03	0.92
Y*(8,L)C*C20	UC48C	0.99	1.00	0.92
Y*9C*B12	FC/MC/PC43B	1.01	1.02	0.98
Y*9C*B12	HD48	1.02	1.02	0.96
Y*9C*C16	FC/MC/PC43C	1.01	1.02	0.97
Y*9C*C16	FC/MC/PC48C	1.04	1.04	0.95
Y*9C*C16	HD48	1.02	1.02	0.94
Y*9C*C16	UC48C	0.99	1.00	0.94
Y*9C*C20	FC/MC/PC43C	1.02	1.03	0.95
Y*9C*C20	FC/MC/PC48C	1.04	1.09	0.97
Y*9C*C20	HD48	1.03	1.06	0.97
Y*9C*C20	UC48C	1.00	1.03	0.98
Y*9C*D20	FC/MC/PC48D	1.04	1.06	0.94
Y*9C*D20	HD48	1.03	1.04	0.94
Y*9C*D20	UC48D	0.99	1.00	0.94

COOLING PERFORMANCE DATA

AIR CONDITIONER MODEL NO.		TCHD48S41S3														
INDOOR COIL MODEL NO.		FC/MC/PC48														
CONDENSING ENTERING AIR TEMPERATURE	IDCFM	1400					1600					1800				
	ID DB (°F)	80	80	75	80	80	80	80	75	80	80	80	80	75	80	80
	ID WB (°F)	57	62	62	67	72	57	62	62	67	72	57	62	62	67	72
65	T.C.	44.8	47.3	47.9	52.2	56.8	46.3	48.2	48.8	53.2	58.1	47.8	49.1	49.7	54.3	59.4
	S.C.	44.8	40.3	34.7	34.4	26.8	46.3	42.9	36.8	36.7	28.0	47.8	45.5	38.9	39.0	29.2
	KW	2.74	2.71	2.74	2.72	2.73	2.73	2.72	2.74	2.72	2.74	2.73	2.72	2.74	2.72	2.75
75	T.C.	43.4	45.6	46.0	50.2	54.7	44.8	46.5	46.8	51.2	55.9	46.2	47.4	47.7	52.1	57.2
	S.C.	43.4	40.1	34.1	33.6	26.0	44.8	42.7	36.3	35.7	27.1	46.2	45.3	38.5	37.9	28.3
	KW	3.21	3.19	3.21	3.18	3.17	3.20	3.19	3.20	3.17	3.18	3.18	3.18	3.19	3.17	3.18
85	T.C.	42.0	44.0	44.1	48.2	52.5	43.3	44.9	44.9	49.1	53.7	44.6	45.8	45.7	49.9	54.9
	S.C.	42.0	40.0	33.6	32.8	25.2	43.3	42.5	35.9	34.8	26.3	44.6	45.1	38.2	36.8	27.4
	KW	3.69	3.68	3.68	3.64	3.61	3.66	3.65	3.66	3.63	3.61	3.63	3.63	3.64	3.62	3.61
95	T.C.	40.5	42.4	42.2	46.2	50.3	41.8	43.3	42.9	47.0	51.5	43.0	44.1	43.6	47.8	52.7
	S.C.	40.5	39.8	33.1	32.0	24.4	41.8	42.4	35.5	33.8	25.5	43.0	44.1	37.9	35.7	26.6
	KW	4.17	4.16	4.15	4.10	4.05	4.13	4.12	4.12	4.09	4.05	4.08	4.09	4.09	4.07	4.04
105	T.C.	37.9	38.7	37.3	43.4	47.6	39.2	40.2	38.6	44.1	48.7	40.5	41.6	39.9	44.9	49.8
	S.C.	37.9	37.2	31.1	30.8	23.4	39.2	39.7	33.6	32.8	24.6	40.5	41.6	36.1	34.7	25.7
	KW	5.42	5.57	5.70	4.94	4.79	5.16	5.24	5.52	4.90	4.78	4.90	4.91	5.34	4.86	4.77
115	T.C.	35.4	35.2	32.6	40.6	44.9	36.7	37.2	34.4	41.3	45.9	38.1	39.1	36.3	42.1	46.9
	S.C.	35.4	34.6	29.2	29.7	22.6	36.7	37.2	31.8	31.7	23.8	38.1	39.1	34.4	33.6	24.9
	KW	6.63	6.93	7.21	5.75	5.50	6.16	6.32	6.88	5.69	5.49	5.69	5.71	6.55	5.62	5.48
125	T.C.	32.9	31.7	27.8	37.8	42.3	34.2	34.2	30.2	38.6	43.2	35.6	36.7	32.7	39.3	44.1
	S.C.	32.9	31.7	27.3	28.7	21.7	34.2	34.2	30.0	30.6	22.9	35.6	36.7	32.7	32.6	24.1
	KW	7.84	8.30	8.72	6.57	6.21	7.16	7.40	8.24	6.47	6.20	6.48	6.50	7.76	6.38	6.20

NOTE: ALL CAPACITIES INCLUDE INDOOR FAN HEAT. KW VALUES ARE FOR THE SYSTEM (OUTDOOR + INDOOR).

Multipliers for determining the performance with other indoor sections.

NOTE: For dry bulb temperatures different than those listed (between 73-87 °F), sensible capacity increases by 1060 BTUH per 1000 CFM per degree above the listed temperature and decreases by 1060 BTUH per 1000 CFM per degree below the listed temperature.

Air Handlers	Coils	T.C.	S.C.	KW
–	FC/MC/PC48	1.00	1.00	1.00
–	FC/MC/PC60	0.99	0.98	1.01
–	FC/MC62	1.01	1.01	1.00
–	FC64	1.03	1.05	1.01
AHE48D	–	1.00	1.01	0.96
AHE60D	–	1.02	1.02	0.96
AHR48D	–	1.00	1.01	1.00
AHR60D	–	1.01	1.02	1.01
AHV48D	-	0.99	0.98	0.99
AHV60D	-	1.00	1.01	0.98
AV*48	–	0.99	1.00	0.97
AV*60	–	1.00	1.01	0.98
MV16C	FC/MC48C	1.01	1.01	0.96

Air Handlers	Coils	T.C.	S.C.	KW
MV16C	FC60C	1.00	0.99	0.98
MV20D	FC/MC48D	1.01	1.01	0.97
MV20D	FC/MC60D	0.97	0.98	0.96
MV20D	FC/MC62D	1.02	1.02	0.96
MV20D	FC64D	1.05	1.07	0.97
MX16C	FC/MC48C	1.01	1.02	0.97
MX16C	FC60C	1.01	1.00	0.95
MX20D	FC/MC48D	1.01	1.00	0.95
MX20D	FC/MC60D	1.01	1.00	0.95
MX20D	FC/MC62D	1.03	1.04	0.95
MX20D	FC64D	1.05	1.07	0.93

Continued on next page.

Furnaces	Coils	T.C.	S.C.	KW
T*(8,L)C*C16	FC/MC/PC48C	1.00	1.01	1.00
T*(8,L)C*C16	FC/PC60C	0.99	1.00	0.99
T*(8,L)C*C16	FC64D	1.04	1.06	0.98
T*(8,L)C*C16	HD48	1.00	1.01	0.99
T*(8,L)C*C16	HD60	1.01	1.02	0.98
T*(8,L)C*C16	UC48C	0.97	0.98	0.98
T*(8,L)C*C16	UC60C	0.98	0.97	0.98
T*(8,L)C*C20	FC/MC/PC48C	1.00	1.01	0.99
T*(8,L)C*C20	FC/PC60C	1.00	1.01	0.99
T*(8,L)C*C20	FC64D	1.04	1.06	0.98
T*(8,L)C*C20	HD48	1.00	1.01	0.99
T*(8,L)C*C20	HD60	1.01	1.02	0.96
T*(8,L)C*C20	UC48C	0.97	0.98	0.98
T*(8,L)C*C20	UC60C	0.98	0.98	0.96
T*(8,L)V*C16	FC/MC/PC48C	1.00	1.01	1.00
T*(8,L)V*C16	FC/PC60C	0.99	1.00	0.99
T*(8,L)V*C16	FC64D	1.04	1.06	0.98
T*(8,L)V*C16	HD60	1.01	1.02	0.98
T*(8,L)V*C16	UC48C	0.97	0.98	0.98
T*(8,L)V*C16	UC60C	0.98	0.97	0.98
T*(8,L)V*C20	FC/MC/PC48C	1.00	1.01	0.99
T*(8,L)V*C20	FC/PC60C	1.00	1.01	0.99
T*(8,L)V*C20	FC64D	1.04	1.06	0.98
T*(8,L)V*C20	HD60	1.01	1.02	0.96
T*(8,L)V*C20	UC48C	0.97	0.98	0.98
T*(8,L)V*C20	UC60C	0.98	0.98	0.96
T*(8,L)X*C16	FC/MC/PC48C	1.00	1.01	1.00
T*(8,L)X*C16	FC/MC62D	1.00	1.02	1.00
T*(8,L)X*C16	FC/PC60C	0.99	0.99	0.99
T*(8,L)X*C16	FC64D	1.04	1.06	0.98
T*(8,L)X*C16	UC48C	0.97	0.97	1.01
T*(8,L)X*C16	UC60C	0.97	0.96	0.99
T*(8,L)X*C20	FC/MC/PC48C	1.01	1.02	0.99
T*(8,L)X*C20	FC/MC/PC60D	0.99	0.99	0.99
T*(8,L)X*C20	FC/MC62D	1.01	1.02	0.99
T*(8,L)X*C20	FC/PC60C	0.99	0.99	0.99
T*(8,L)X*C20	FC64D	1.05	1.07	0.97
T*(8,L)X*C20	UC48C	0.96	0.93	0.96
T*(8,L)X*C20	UC60C	0.96	0.95	0.94
T*(8,L)X*C20	UC60D	0.96	0.95	0.94
T*9(C,V)*C16	FC/MC/PC48C	1.00	1.00	0.99
T*9(C,V)*C16	FC/PC60C	1.00	1.02	0.99
T*9(C,V)*C16	FC64D	1.04	1.05	1.00
T*9(C,V)*C16	HD48	1.00	1.01	0.99
T*9(C,V)*C16	HD60	1.00	1.01	0.99
T*9(C,V)*C16	UC48C	0.97	0.98	0.99
T*9(C,V)*C16	UC60C	0.97	0.97	0.99
T*9(C,V)*C20	FC/MC/PC48C	1.01	1.02	0.99
T*9(C,V)*C20	FC/PC60C	1.00	1.02	0.99
T*9(C,V)*C20	FC64D	1.04	1.05	1.02
T*9(C,V)*C20	HD48	1.00	1.01	0.99
T*9(C,V)*C20	HD60	1.00	1.01	0.99
T*9(C,V)*C20	UC48C	0.97	0.98	0.99
T*9(C,V)*C20	UC60C	0.97	0.97	0.99
T*9(C,V)*D20	FC/MC/PC48D	1.01	1.02	0.99

Furnaces	Coils	T.C.	S.C.	KW
T*9(C,V)*D20	FC/MC/PC60D	1.00	1.02	0.98
T*9(C,V)*D20	FC/MC62D	1.01	1.02	0.98
T*9(C,V)*D20	FC64D	1.04	1.05	1.00
T*9(C,V)*D20	HD48	1.00	1.01	0.99
T*9(C,V)*D20	HD60	1.01	1.02	0.99
T*9(C,V)*D20	UC48D	0.97	0.98	0.99
T*9(C,V)*D20	UC60D	0.98	0.97	0.99
T*9X*C16	FC/MC/PC48C	1.00	0.99	1.00
T*9X*C16	FC/MC62D	1.00	1.01	1.00
T*9X*C16	FC/PC60C	0.97	0.99	0.99
T*9X*C16	FC64D	1.04	1.06	0.98
T*9X*C16	UC48C	0.96	0.97	1.00
T*9X*C20	FC/MC/PC48C	1.00	1.01	1.00
T*9X*C20	FC/MC62D	1.01	1.02	1.01
T*9X*C20	FC/PC60C	0.97	0.99	0.99
T*9X*C20	FC64D	1.04	1.07	0.96
T*9X*C20	UC48C	0.97	0.97	0.99
T*9X*D20	FC/MC/PC48D	1.00	1.01	1.00
T*9X*D20	FC/MC/PC60D	0.99	0.97	0.97
T*9X*D20	FC/MC62D	1.00	1.01	1.00
T*9X*D20	FC64D	1.04	1.06	0.98
T*9X*D20	UC48D	0.96	0.97	1.00
T*9X*D20	UC60D	0.96	0.93	0.96
Y*(8,L)C*C16	FC/MC/PC48C	1.00	1.01	1.00
Y*(8,L)C*C16	FC/PC60C	0.99	1.00	0.99
Y*(8,L)C*C16	FC64D	1.04	1.06	0.98
Y*(8,L)C*C16	HD60	1.01	1.02	0.98
Y*(8,L)C*C16	UC48C	0.97	0.98	0.98
Y*(8,L)C*C16	UC60C	0.98	0.97	0.98
Y*(8,L)C*C20	FC/MC/PC48C	1.00	1.01	0.99
Y*(8,L)C*C20	FC/PC60C	1.00	1.01	0.99
Y*(8,L)C*C20	FC64D	1.04	1.06	0.98
Y*(8,L)C*C20	HD60	1.01	1.02	0.96
Y*(8,L)C*C20	UC48C	0.97	0.98	0.98
Y*(8,L)C*C20	UC60C	0.98	0.98	0.96
Y*9C*C16	FC/MC/PC48C	1.00	1.00	0.99
Y*9C*C16	FC/PC60C	1.00	1.02	0.99
Y*9C*C16	FC64D	1.04	1.05	1.00
Y*9C*C16	HD60	1.00	1.01	0.99
Y*9C*C16	UC48C	0.97	0.98	0.99
Y*9C*C16	UC60C	0.97	0.97	0.99
Y*9C*C20	FC/MC/PC48C	1.01	1.02	0.99
Y*9C*C20	FC/PC60C	1.00	1.02	0.99
Y*9C*C20	FC64D	1.04	1.05	1.02
Y*9C*C20	HD60	1.00	1.01	0.99
Y*9C*C20	UC48C	0.97	0.98	0.99
Y*9C*C20	UC60C	0.97	0.97	0.99
Y*9C*D20	FC/MC/PC48D	1.01	1.02	0.99
Y*9C*D20	FC/MC/PC60D	1.00	1.02	0.98
Y*9C*D20	FC/MC62D	1.01	1.02	0.98
Y*9C*D20	FC64D	1.04	1.05	1.00
Y*9C*D20	HD60	1.01	1.02	0.99
Y*9C*D20	UC48D	0.97	0.98	0.99
Y*9C*D20	UC60D	0.98	0.97	0.99

COOLING PERFORMANCE DATA

AIR CONDITIONER MODEL NO.		TCHD60S41S3														
INDOOR COIL MODEL NO.		FC/MC62														
CONDENSING ENTERING AIR TEMPERATURE	IDCFM	1600					1800					2000				
	ID DB (°F)	80	80	75	80	80	80	80	75	80	80	80	80	75	80	80
	ID WB (°F)	57	62	62	67	72	57	62	62	67	72	57	62	62	67	72
65	T.C.	54.0	58.2	58.3	62.9	68.5	55.4	59.4	59.3	64.2	69.8	56.9	60.6	60.3	65.4	71.0
	S.C.	54.0	49.2	41.5	41.2	31.7	55.4	51.9	43.5	43.0	32.8	56.9	54.5	45.5	44.8	34.0
	KW	3.32	3.35	3.32	3.40	3.48	3.34	3.37	3.34	3.43	3.50	3.37	3.39	3.36	3.45	3.52
75	T.C.	51.8	55.7	55.7	60.6	66.1	53.3	56.9	56.7	61.8	67.3	54.8	58.0	57.8	63.0	68.5
	S.C.	51.8	47.8	40.2	39.9	30.8	53.3	50.4	42.2	41.8	31.9	54.8	53.1	44.2	43.7	33.1
	KW	3.96	3.98	3.98	4.00	4.05	3.97	3.99	3.98	4.01	4.06	3.98	3.99	3.99	4.03	4.08
85	T.C.	49.7	53.3	53.2	58.3	63.8	51.2	54.3	54.2	59.4	64.9	52.8	55.4	55.2	60.5	66.0
	S.C.	49.7	46.4	38.9	38.6	29.8	51.2	49.0	40.9	40.6	31.0	52.8	51.7	42.9	42.5	32.1
	KW	4.61	4.61	4.63	4.59	4.61	4.59	4.60	4.62	4.60	4.62	4.58	4.60	4.61	4.60	4.63
95	T.C.	47.6	50.8	50.6	55.9	61.4	49.2	51.8	51.6	57.0	62.4	50.7	52.8	52.6	58.1	63.4
	S.C.	47.6	45.0	37.6	37.4	28.9	49.2	47.6	39.6	39.3	30.1	50.7	50.2	41.5	41.3	31.2
	KW	5.25	5.23	5.29	5.19	5.18	5.22	5.22	5.26	5.18	5.18	5.18	5.20	5.24	5.17	5.19
105	T.C.	44.8	47.6	47.4	52.8	58.3	46.3	48.6	48.3	53.8	59.3	47.8	49.7	49.2	54.9	60.3
	S.C.	44.8	43.1	36.1	36.0	27.8	46.3	45.7	38.0	38.0	29.0	47.8	48.2	39.9	39.9	30.1
	KW	6.46	6.36	6.48	6.18	6.04	6.35	6.31	6.42	6.15	6.01	6.25	6.25	6.36	6.11	5.98
115	T.C.	42.0	44.4	44.3	49.8	55.2	43.5	45.6	45.2	50.8	56.3	45.0	46.7	46.0	51.7	57.4
	S.C.	42.0	41.3	34.6	34.7	26.8	43.5	43.8	36.5	36.6	27.9	45.0	46.3	38.4	38.6	29.1
	KW	7.64	7.46	7.63	7.14	6.88	7.46	7.36	7.54	7.08	6.81	7.28	7.27	7.45	7.03	6.75
125	T.C.	39.3	41.3	41.2	46.8	52.1	40.7	42.5	42.0	47.7	53.2	42.1	43.7	42.8	48.6	54.4
	S.C.	39.3	39.5	33.2	33.4	25.7	40.7	41.9	35.0	35.3	26.9	42.1	43.7	36.9	37.2	28.1
	KW	8.81	8.56	8.78	8.10	7.72	8.56	8.42	8.66	8.02	7.62	8.31	8.29	8.54	7.94	7.52

NOTE: ALL CAPACITIES INCLUDE INDOOR FAN HEAT. KW VALUES ARE FOR THE SYSTEM (OUTDOOR + INDOOR).

Multipliers for determining the performance with other indoor sections.

NOTE: For dry bulb temperatures different than those listed (between 73-87 °F), sensible capacity increases by 1060 BTUH per 1000 CFM per degree above the listed temperature and decreases by 1060 BTUH per 1000 CFM per degree below the listed temperature.

Air Handlers	Coils	T.C.	S.C.	KW
–	FC/MC62	1.00	1.00	1.00
–	FC64	1.03	1.05	1.00
AHE60D	–	1.01	1.03	0.96
AHV60D	-	0.99	0.97	0.99
AV*60	–	0.98	0.95	0.98
MV20D	FC/MC62D	1.01	1.00	0.98
MV20D	FC64D	1.04	1.05	0.99
MX20D	FC/MC62D	1.02	1.03	0.95
MX20D	FC64D	1.04	1.06	0.98

Furnaces	Coils	T.C.	S.C.	KW
T*(8,L)C*C16	HD60	1.00	1.01	0.99
T*(8,L)C*C20	FC/MC62D	0.99	0.97	0.96
T*(8,L)C*C20	HD60	0.98	0.96	0.95
T*(8,L)V*C16	HD60	1.00	1.01	0.99
T*(8,L)V*C20	FC/MC62D	0.99	0.97	0.96
T*(8,L)X*C20	FC/MC62D	0.99	0.97	0.97
T*(8,L)X*C20	FC64D	1.03	1.03	0.96
T*9(C,V)*C16	HD60	0.98	0.96	0.96
T*9(C,V)*C20	FC/MC62D	0.99	0.96	0.98
T*9(C,V)*C20	FC64D	1.02	1.01	0.99
T*9(C,V)*C20	HD60	0.98	0.96	0.97
T*9(C,V)*D20	FC/MC62D	0.99	0.96	0.97
T*9(C,V)*D20	FC64D	1.02	1.01	0.97
T*9(C,V)*D20	HD60	0.98	0.96	0.97
T*9X*C20	FC64D	1.02	1.01	0.95
T*9X*D20	FC64D	1.03	1.01	0.96
Y*(8,L)C*C16	HD60	1.00	1.01	0.99
Y*(8,L)C*C20	FC/MC62D	0.99	0.97	0.96
Y*9C*C16	HD60	0.98	0.96	0.96
Y*9C*C20	FC/MC62D	0.99	0.96	0.98
Y*9C*C20	FC64D	1.02	1.01	0.99
Y*9C*D20	FC/MC62D	0.99	0.96	0.97
Y*9C*D20	FC64D	1.02	1.01	0.97

Subject to change without notice. Published in U.S.A.
Copyright © 2012 by Johnson Controls, Inc. All rights reserved.

556454-YTG-C-1112
Supersedes: 556454-YTG-B-0410

York International Corp.
5005 York Drive
Norman, OK 73069