YORK®
Heating and Air Conditioning

TECHNICAL GUIDE

HORIZONTAL DISCHARGE AIR CONDITIONERS

13 SEER – R-410A

MODELS:
TCHD18 THRU 60
(1.5 THRU 5 NOMINAL TONS, 1 PHASE)

AHRI CERTIFIED™ www.ahridirectory.org Unitary Small AC AHRI Standard 210/240 Certification applies only when the complete system is listed with AHRI.

ISO 9000 REGISTRATION
ISO 9001 Certified Quality Management System

C US

LIMITED WARRANTY TO CONSUMERS Good Housekeeping Promises REPLACEMENT OR REFUND IF DEFECTIVE

Due to continuous product improvement, specifications are subject to change without notice.

Visit us on the web at www.york.com

Additional rating information can be found at
www.ahridirectory.org

WARRANTY

Standard 5-year limited parts warranty.
Standard 10-year limited compressor warranty.

Extended 10-year limited parts warranty when product is registered online within 90 days of purchase for replacement or closing for new home construction.

DESCRIPTION

The 13 SEER Series condensing unit is the outdoor part of a versatile system of air conditioning. It is designed to be custom-matched with one of UPG's complete line of evaporator sections, with each serving a specific function. Matching Air Handlers are available for upflow, downflow, or horizontal applications to provide a complete system. Electric Heaters are available, if required. Add-On coils are available for use with upflow, downflow, or horizontal furnaces and air handlers.

FEATURES

- **Performance -** Efficiency levels from 13.0 SEER/11.5 EER with a loose coil and up to 15.5 SEER/13.5 EER when coupled with a variable speed indoor blower.
- **Easy to Install -** Compact "slim-line" design allows for easy installation in tight spaces. Units can be stacked.
- **Lower Installation Cost -** Installation time and costs are reduced by easy power and control wiring connections. The unit contains enough refrigerant for matching indoor coils and 15 feet of interconnecting piping.
- **Quiet Operation -** Levels as low as 67 dBA. High efficiency scroll compressor and swept wing fan design reducing operating sound to a mere whisper.
- **State Of The Art Coil Technology -** Micro-channel (MC2) aluminum coil technology provides enhanced capacities and efficiencies plus the benefit of maximum corrosion protection especially in coastal applications (up to 7 times greater corrosion resistance than conventional copper tube and aluminum fin coils).
- **Compressor Protection -** The compressor is internally protected against high pressure and temperature. This is accomplished by the simultaneous operation of high pressure relief valve and a temperature sensor which protects the compressor if undesirable operating conditions occur. A liquid line filter-drier further protects the compressor.
- **Durable Cabinet -** Heavy-gage steel cabinet and a tubular base rail provide added support.
- **Durable Finish -** Automotive quality finish provides the ultimate protection from harmful U.V. rays and rust creep ensuring long-lasting high quality appearance. A powder-paint topcoat is applied over a baked-on primer, using a galvanized, zinc coated steel base material. The result is a finish that has been proven in testing to provide 33% greater durability than conventional powder-coat finishes.
- **Aesthetic -** Powder paint "Champagne" Color provides an attractive retail finish.
- **Low Maintenance -** Long life permanently lubricated motor-bearings need no annual servicing.
- **Easy Service Access -** Fully exposed refrigerant connections and a single panel covering the electrical controls make for easy servicing of the unit.
- **Secured Service Valve -** Secured re-usable service valves are provided on both the liquid and vapor sweat connections for ease of evacuating and charging.
- **Other Features:**
  - Factory supplied filter drier
  - High pressure switch, low pressure switch
  - Accumulator and crankcase heater in all sizes
  - Up to 200' line set out of the box
  - Zero lot line clearances (6" clearance in either direction)
- **Agency Listed -** U.L. and C.U.L. listed - approved for outdoor application. The unit is certified in accordance with the Unitary Small Equipment certification program, which is based on ARI Standard 210/240.

Physical and Electrical Data

MODEL		TCHD18 S41S3	TCHD24 S41S3	TCHD30 S41S3	TCHD36 S41S3	TCHD48 S41S3	TCHD60 S41S3
Unit Supply Voltage		208-230V, 1ϕ, 60Hz					
Normal Voltage Range [1]		187 to 252					
Minimum Circuit Ampacity		11.8	17.4	17.5	23.1	27.1	34.3
Max. Overcurrent Device Amps [2]		20	30	30	40	45	60
Min. Overcurrent Device Amps [3]		15	20	20	25	30	35
Multi-Stage Compressor		No	No	No	No	No	No
Compressor Type		Scroll	Scroll	Scroll	Scroll	Scroll	Scroll
Compressor Amps	Rated Load	9.0	13.5	12.8	17.3	20.5	26.3
	Locked Rotor	48.0	58.3	64.0	96.7	115.0	134.0
Crankcase Heater		Yes	Yes	Yes	Yes	Yes	Yes
Fan Diameter Inches		17.5	17.5	23	23	23	23
Fan Motor	Rated HP	1/8	1/8	1/4	1/4	1/4	1/4
	Rated Load Amps	0.60	0.60	1.45	1.45	1.45	1.45
	Nominal RPM	840	840	850	850	850	850
Coil	Face Area Sq. Ft.	5.76	5.76	11.96	11.96	13.96	13.96
	Rows Deep	1	1	1	1	1	1
	Fins / Inches	23	23	23	23	23	23
Refrigerant Lines[4]	Max. Length	200	200	200	200	200	200
	Max. Lift	65	65	65	65	65	65
	Max. Drop	150	150	150	150	150	150
	Liquid Line Set OD (Field Installed)	3 / 8	3 / 8	3 / 8	3 / 8	3 / 8	3 / 8
	Vapor Line Set OD (Field Installed)	3 / 4	3 / 4	3 / 4	3 / 4	7 / 8	7 / 8
Unit Charge (Lbs. - Oz.) [5]		2 - 14	3 - 5	4 - 0	4 - 8	5 - 5	5 - 6
Charge Per Foot, Oz.		0.68	0.68	0.68	0.68	0.70	0.70
Operating Weight Lbs.		130	135	195	215	240	250

1. Rated in accordance with ARI Standard 110, utilization range “A”.
2. Dual element fuses or HACR circuit breaker. Maximum allowable overcurrent protection.
3. Dual element fuses or HACR circuit breaker. Minimum recommended overcurrent protection.
4. When more than 50 feet of interconnecting tubing and more than 30 feet of vertical lift is used, consult the Application Data (part number 247077). For long-line applications, interconnecting lines over 100 feet must be installed with liquid line solenoid.
5. The Unit Charge is correct for the outdoor unit, matched indoor coil and 15 feet of refrigerant tubing. For tubing lengths other than 15 feet, add or subtract the amount of refrigerant, using the difference in length multiplied by the per foot value.

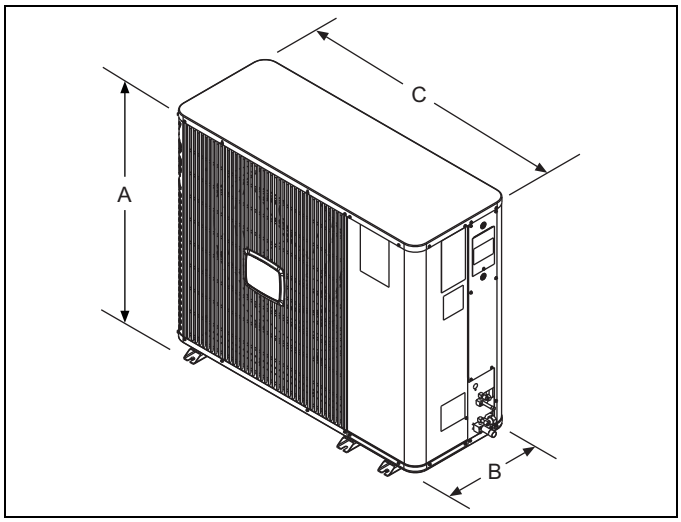

All dimensions are in inches. They are subject to change without notice. Certified dimensions will be provided upon request.

Unit Model	Dimensions (Inches)			Refrigerant Connection Service Valve Size	
	A[1]	B	C	Liquid	Vapor
18	25-1/8	14-5/8	37	3/8”	3/4”
24	25-1/8	14-5/8	37		
30	37-1/8	17-1/8	44-5/8		
36	37-1/8	17-1/8	44-5/8		
48	43-1/8	17-1/8	44-5/8		7/8”
60	43-1/8	17-1/8	44-5/8		

1. Including Fan Guard.

System Charge for Various Matched Systems						
Outdoor Unit	TCHD18S41S3	TCHD24S41S3	TCHD30S41S3	TCHD36S41S3	TCHD48S41S3	TCHD60S41S3
Required Orifice or TXV [1]	1TVM4F1	1TVM4F1	1TVM4G1	1TVM4G1	1TVM4J1	1TVM4K1
Factory Charge, lbs-oz	2 - 14	3 - 5	4 - 0	4 - 8	5 - 5	5 - 6
Indoor Coil [2,3]	**Additional Charge, oz**					
AHP24	–	2	–	–	–	–
AHP36	–	–	16	12	–	–
AHP/SHP60	–	–	–	–	11	–
AHX18	0	0	–	–	–	–
AHX24	10	10	–	–	–	–
AHX30	13	14	10	–	–	–
AHX36	–	20	16	12	–	–
AHX42	–	–	27	22	–	–
AHX48	–	–	26	22	11	–
AHX60	–	–	–	27	16	13
AV24	2	2	–	–	–	–
AV36	20	20	16	12	–	–
AV/SV48	–	–	–	22	11	–
AV/SV60	–	–	–	–	11	8
F*FP030	–	2	0	–	–	–
F*FP036	–	–	8	4	–	–
F*FP040	–	–	10	7	–	–
F*FP042	–	–	–	7	–	–
F*FP048	–	–	–	16	11	–
F*FP060	–	–	–	–	16	–
F*FV060	–	–	–	8	11	8
F6FP018	0	–	–	–	–	–
F6FP024	3	3	–	–	–	–
F6FP030	14	15	10	–	–	–
F6FP036	–	15	10	7	–	–
F6FP042	–	–	20	16	–	–
F6FP048	–	–	10	7	11	–
F6FP060	–	–	–	27	16	13
FC/MC/PC18	0	–	–	–	–	–
FC/MC/PC24	0	0	–	–	–	–
FC/MC/PC30	4	4	2	–	–	–
FC/MC/PC32	13	14	10	6	–	–
FC/MC/PC35	13	14	0	6	–	–
FC/MC/PC36	6	6	3	0	–	–
FC/MC/PC37	20	21	16	12	–	–
FC/MC/PC42	–	9	3	1	–	–
FC/MC/PC43	–	20	16	0	–	–
FC/MC/PC48	–	32	27	22	0	–
FC/MC/PC60	–	–	–	–	10	–
FC/MC62	–	–	–	–	16	0
HC18	0	0	–	–	–	–
HC30	10	10	7	–	–	–
HC36	13	14	10	6	–	–
HC42	–	21	16	12	–	–
HC60	–	–	–	7	0	–
HD24	22	17	–	–	–	–
HD36	28	20	14	11	–	–
HD48	–	–	–	33	24	–
HD60	–	–	–	–	30	22

For notes see Page 4.

System Charge for Various Matched Systems (Continued)						
Outdoor Unit	TCHD18S41S3	TCHD24S41S3	TCHD30S41S3	TCHD36S41S3	TCHD48S41S3	TCHD60S41S3
Required Orifice or TXV [1]	1TVM4F1	1TVM4F1	1TVM4G1	1TVM4G1	1TVM4J1	1TVM4K1
Factory Charge, lbs-oz	2 - 14	3 - 5	4 - 0	4 - 8	5 - 5	5 - 6
Indoor Coil [2,3]	**Additional Charge, oz**					
UC18	1	–	–	–	–	–
UC24	5	5	–	–	–	–
UC30	5	5	3	–	–	–
UC36	7	7	4	1	–	–
UC42	–	9	3	0	–	–
UC48	–	25	21	17	6	–
UC60	–	–	–	–	11	–

FOOTNOTES:

1. For applications requiring a TXV use 1TVM series kit.
2. Systems matched with furnace or air handlers not equipped with blower-off delays may require blower Time Delay Kit 2FD06700224.
3. PC coils cannot be used in downflow or horizontal applications. FC coils cannot be used in horizontal applications.

PROCEDURES:

1. Unit factory charge listed on the unit nameplate includes refrigerant for the condenser, the smallest evaporator and 15 feet of interconnecting line tubing.
2. Verify the TXV and additional charge required for specific evaporator coil in the system using the above table.
3. Additional charge for the amount of interconnecting line tubing greater than 15 feet at the rate specified in Physical and Electrical Data Table.
4. For TXV matches requiring additional charge, the refrigerant needs to be weighed in for specific coil match and lineset length.
5. Permanently mark the unit nameplate with the total system charge. Total System Charge = Base Charge (as shipped) + adder for evaporator + adder for line set.

COOLING CAPACITY - With Air Handler Coils

UNIT MODEL	AIR HANDLER		COIL MODEL[1]	COOLING				
	MODEL	W		RATED CFM	NET MBH		SEER	EER
					TOTAL	SENS.		
13 SEER AC WITH MV - VARIABLE SPEED								
TCHD18S41S3	MV12B	17	FC/MC18B	600	18.0	12.3	14.05	11.85
	MV12B	17	FC/MC24B	600	18.4	12.9	14.50	12.15
	MV12B	17	FC/MC30B	600	18.4	12.9	14.50	12.15
TCHD24S41S3	MV12B	17	FC/MC24B	800	23.6	17.2	14.65	12.25
	MV12B	17	FC/MC30B	800	23.6	17.2	14.65	12.25
	MV12B	17	FC/MC35B	800	23.6	17.3	14.85	12.20
	MV16C	21	FC/MC35C	800	23.6	17.3	14.85	12.20
	MV12B	17	FC/MC36B	800	23.6	17.4	14.85	12.20
	MV16C	21	FC/MC36C	800	23.6	17.4	14.85	12.20
	MV12B	17	FC/MC43B	800	24.2	17.7	15.00	12.45
	MV16C	21	FC/MC43C	800	24.2	17.7	15.05	12.55
TCHD30S41S3	MV12B	17	FC/MC30B	1000	28.2	20.8	14.60	13.00
	MV12B	17	FC/MC35B	1000	28.6	21.2	15.00	13.20
	MV16C	21	FC/MC35C	1000	28.6	21.2	15.00	13.25
	MV12B	17	FC/MC36B	1000	28.6	21.0	15.00	13.15
	MV16C	21	FC/MC36C	1000	28.6	21.0	15.00	13.25
	MV12B	17	FC/MC43B	1000	29.0	21.6	15.15	13.35
	MV16C	21	FC/MC43C	1000	29.0	21.6	15.35	13.50
	MV16C	21	FC/MC48C	1000	29.4	21.8	15.50	13.70
TCHD36S41S3	MV12B	17	FC/MC35B	1200	33.6	24.6	14.10	12.20
	MV16C	21	FC/MC35C	1200	33.8	24.8	14.55	12.55
	MV12B	17	FC/MC36B	1200	33.6	24.2	14.00	12.15
	MV16C	21	FC/MC36C	1200	33.8	24.4	14.30	12.50
	MV12B	17	FC/MC43B	1200	34.4	25.2	14.50	12.50
	MV16C	21	FC/MC43C	1200	34.6	25.4	15.00	13.00
	MV16C	21	FC/MC48C	1200	35.0	25.6	15.25	13.10
	MV12D	24	FC/MC48D	1150	34.6	25.2	15.00	13.00
TCHD48S41S3	MV16C	21	FC/MC48C	1600	47.5	34.2	14.00	12.10
	MV20D	24	FC/MC48D	1600	47.5	34.2	14.00	12.00
	MV20D	24	FC/MC60D	1600	45.5	33.0	13.50	11.60
	MV20D	24	FC/MC62D	1600	48.0	34.6	14.50	12.25
TCHD60S41S3	MV20D	24	FC/MC62D	1800	57.5	39.5	13.40	11.30
13 SEER AC WITH AV / SV - / F*FV VARIABLE SPEED								
TCHD18S41S3	AV*24	17	–	610	18.1	13.1	14.25	11.50
	AV*36	21	–	630	19.0	13.8	15.00	12.00
TCHD24S41S3	AV*24	17	–	800	23.2	17.1	14.25	11.75
	AV*36	21	–	725	23.8	17.1	14.50	12.25
TCHD30S41S3	AV*36	21	–	960	28.8	21.3	15.50	13.25
TCHD36S41S3	AV*36	21	–	1190	34.4	25.3	14.50	12.25
	AV/SV*48	24	–	1220	34.8	25.7	15.00	12.75
	F*FV060	24	–	1200	33.2	23.8	14.55	12.45
TCHD48S41S3	AV/SV*48	24	–	1625	46.5	33.8	13.75	11.75
	AV/SV*60	24	–	1560	47.0	34.0	13.75	11.75
	F*FV060	24	–	1600	45.5	33.2	13.55	11.60
TCHD60S41S3	AV/SV*60	24	–	1730	56.0	37.7	13.25	11.00
	F*FV060	24	–	1800	55.0	38.0	13.00	11.00

For notes see Page 6.

COOLING CAPACITY - With Air Handler Coils (Continued)

UNIT MODEL	AIR HANDLER		COIL MODEL[1]	COOLING				
	MODEL	W		RATED CFM	NET MBH		SEER	EER
					TOTAL	SENS.		
13 SEER AC WITH AHP / SHP / AHX / F*FP								
TCHD18S41S3	AHX18	17	–	630	18.2	13.1	14.25	11.75
	AHX24	17	–	590	18.3	13.0	14.25	11.75
	AHX30	17	–	610	18.6	13.3	14.50	12.00
	F6FP018	17	–	600	17.9	12.6	13.50	11.25
	F6FP024	17	–	600	18.5	13.1	14.00	11.50
	F6FP030	17	–	620	18.5	13.2	14.00	11.50
TCHD24S41S3	AHP24	17	–	850	23.0	16.8	13.15	11.05
	AHX18	17	–	835	23.2	17.2	14.00	11.50
	AHX24	17	–	800	23.6	17.3	14.00	12.75
	AHX30	17	–	820	23.8	17.8	14.50	12.75
	AHX36	21	–	815	24.2	18.1	15.00	12.25
	F*FP030	17	–	800	23.0	16.7	13.10	11.00
	F6FP024	17	–	840	23.4	17.4	14.00	11.50
	F6FP030	17	–	850	23.4	17.4	13.75	11.25
	F6FP036	21	–	855	23.8	17.9	14.25	11.75
TCHD30S41S3	AHP36	21	–	1000	28.4	21.2	13.75	12.20
	AHX30	17	–	1025	28.4	21.3	14.50	12.50
	AHX36	21	–	1005	29.0	21.7	15.25	13.25
	AHX42	21	–	990	29.4	22.1	15.50	13.75
	AHX48	24	–	1090	29.8	23.0	15.50	13.75
	F*FP030	17	–	1000	27.6	20.0	13.20	11.85
	F*FP036	21	–	1000	27.8	20.6	13.40	12.00
	F*FP040	21	–	1000	27.8	20.4	13.40	12.00
	F6FP030	17	–	1035	28.2	20.9	13.75	12.00
	F6FP036	21	–	980	28.2	20.7	14.50	12.75
	F6FP042	21	–	1065	29.6	22.4	15.25	13.50
	F6FP048	24	–	1055	28.0	21.0	14.50	12.50
TCHD36S41S3	AHP36	21	–	1200	34.2	25.0	14.00	12.15
	AHX36	21	–	1225	34.4	25.7	14.75	12.50
	AHX42	21	–	1190	35.0	25.9	15.25	12.75
	AHX48	24	–	1255	35.2	26.3	15.25	12.75
	AHX60	24	–	1300	35.6	26.8	15.00	12.75
	F*FP036	21	–	1200	33.0	23.8	13.00	11.35
	F*FP040	21	–	1200	33.0	24.0	13.00	11.40
	F*FP042	21	–	1200	33.0	24.0	13.00	11.40
	F5FP048	24	–	1250	35.0	25.8	15.20	13.00
	F6FP036	21	–	1210	33.4	24.3	13.75	11.75
	F6FP042	21	–	1290	35.2	26.4	14.75	12.50
	F6FP048	24	–	1125	32.2	23.3	14.00	11.75
	F6FP060	24	–	1240	35.2	26.3	15.00	12.75
TCHD48S41S3	AHP/SHP60	24	–	1600	45.5	33.2	13.40	11.50
	AHX48	24	–	1660	47.0	34.6	13.75	11.75
	AHX60	24	–	1680	47.5	34.8	13.50	11.75
	F5FP048	24	–	1700	47.5	35.0	13.75	12.00
	F5FP060	24	–	1700	46.0	33.4	13.35	11.55
	F6FP048	24	–	1625	45.0	33.2	13.00	11.00
	F6FP060	24	–	1710	48.0	35.0	13.50	11.50
TCHD60S41S3	AHX60	24	–	1905	57.5	40.2	13.00	11.00
	F6FP060	24	–	1710	56.5	38.7	13.00	11.00

Rated in accordance with DOE test procedures (Federal Register 12-27-79 and 3-18-88) and ARI Standards 210.
Cooling MBH based on 80°F entering air temperature, 50% RH, and rated air flow.
EER (Energy Efficiency Ratio) is the total cooling output in BTU's at 95°F outdoor ambient divided by the total electric power in watt-hours at those conditions.
SEER (Seasonal Energy Efficiency Ratio) is the total cooling output in BTU's during a normal annual usage period for cooling divided by the total electric power input in watt-hours during the same period.

1. MC coils available with a factory installed horizontal drain pan. See price pages for specific model number.

— = Not applicable.

COOLING CAPACITY - Upflow, Downflow & Horizontal Furnaces and Coils

UNIT MODEL	FURNACE**		COIL MODEL	COOLING				
	CFM RANGE (Min.-max.)	W		RATED CFM	NET MBH		SEER[1]	EER
					TOTAL	SENS.		
TCHD18S41S3	450 - 750	14,17	FC/MC/PC24	600	18.0	12.6	13.00	11.00
	450 - 750	14,17	FC/MC/PC30	600	18.0	12.6	13.00	11.00
	450 - 750	14	FC/MC/PC32	600	18.1	12.6	13.00	11.05
	450 - 750	17	FC/MC/PC35	600	18.1	12.6	13.00	11.05
	450 - 750	14,17	FC/MC/PC36	600	18.2	12.6	13.00	11.15
	450 - 750	14	FC/MC/PC37	600	18.4	12.7	13.10	11.25
	450 - 750	17	HC36	600	18.1	12.6	13.00	11.05
	450 - 750	14,17	HD24	600	18.7	12.9	13.25	11.35
	450 - 750	14,17	UC24	600	18.1	12.6	13.00	11.10
	450 - 750	14,17	UC30	600	18.1	12.6	13.00	11.10
TCHD24S41S3	600 - 1000	14,17	FC/MC/PC24	800	23.0	16.8	13.00	11.00
	600 - 1000	14,17	FC/MC/PC30	800	23.0	16.8	13.00	11.00
	600 - 1000	14	FC/MC/PC32	800	23.0	16.9	13.15	11.00
	600 - 1000	17,21	FC/MC/PC35	800	23.0	16.9	13.15	11.00
	600 - 1000	14,17,21	FC/MC/PC36	800	23.0	16.9	13.15	11.00
	600 - 1000	14	FC/MC/PC37	800	23.6	17.3	13.30	11.20
	600 - 1000	17,21	FC/MC/PC43	800	23.6	17.3	13.30	11.20
	600 - 1000	14	HC30	800	22.8	16.6	13.00	11.00
	600 - 1000	17	HC36	800	23.0	16.9	13.15	11.00
	600 - 1000	21	HC42	800	23.6	17.3	13.30	11.20
	600 - 1000	14,17	UC24	800	23.0	16.9	13.05	11.00
	600 - 1000	14,17	UC30	800	23.0	16.9	13.05	11.00
TCHD30S41S3	800 - 1200	14,17	FC/MC/PC30	1000	27.6	20.4	13.25	11.85
	800 - 1200	14,17	FC/MC/PC32	1000	28.0	20.8	13.50	12.00
	800 - 1200	17,21	FC/MC/PC35	1000	28.0	20.8	13.50	12.00
	800 - 1200	14,17,21	FC/MC/PC36	1000	28.0	20.6	13.45	12.00
	800 - 1200	14	FC/MC/PC37	1000	28.4	21.2	13.75	12.20
	800 - 1200	17,21	FC/MC/PC43	1000	28.4	21.2	13.70	12.20
	800 - 1200	14,17	HC30	1000	27.6	20.4	13.35	11.80
	800 - 1200	17	HC36	1000	28.0	20.8	13.50	12.00
	800 - 1200	21	HC42	1000	28.4	21.2	13.75	12.20
	800 - 1200	14,17,21	HD36	1000	27.6	20.0	13.30	11.85
	800 - 1200	14,17	UC30	1000	27.8	20.4	13.40	12.00
	800 - 1200	21,24	UC48	1000	26.8	20.0	13.00	11.50
TCHD36S41S3	1000 - 1400	14	FC/MC/PC32	1200	33.2	24.2	13.20	11.50
	1000 - 1400	17,21	FC/MC/PC35	1200	33.2	24.2	13.20	11.50
	1000 - 1400	14,17,21	FC/MC/PC36	1200	33.0	24.0	13.00	11.40
	1000 - 1400	14	FC/MC/PC37	1200	33.8	24.8	13.50	11.70
	1000 - 1400	17,21	FC/MC/PC43	1200	34.0	24.8	13.50	11.75
	1000 - 1400	21,24	FC/MC/PC48	1200	34.4	25.2	13.65	12.00
	1000 - 1400	17	HC36	1200	33.2	24.2	13.20	11.50
	1000 - 1400	21	HC42	1200	33.8	25.0	13.50	11.70
	1000 - 1400	14,17,21	HD36	1200	32.4	23.2	13.00	11.20
	1000 - 1400	14,17,21,24	HD48	1200	34.2	24.8	13.65	11.85
TCHD48S41S3	1400 - 1800	21,24	FC/MC/PC48	1600	47.0	33.8	13.25	11.50
	1400 - 1800	21,24	FC/MC62	1600	47.5	34.2	13.35	11.60
	1400 - 1800	14,17,21,24	HD48	1600	47.0	33.4	13.20	11.50
TCHD60S41S3	1600 - 2000	21,24	FC/MC62	1800	57.0	39.5	13.00	11.00

1. Requires a 2FD06700224 Blower Time Delay unless a standard furnace is equipped with one.

** Refer to Quick Selection Chart for specific furnace match-up.

COOLING CAPACITY - With High Efficiency Motor Furnaces

UNIT MODEL	FURNACE MODEL	COIL MODEL[1]	W	COOLING				
				RATED CFM	Net MBH		SEER	EER
					TOTAL	SENS.		
13 SEER AC WITH VARIABLE SPEED FURNACES[2]								
TCHD18S41S3	T*(8,L)X*A12	FC/MC/PC18A	14	540	17.7	12.4	14.00	11.50
	T*(8,L)X*B12	FC/MC/PC18B	17	580	17.9	12.6	14.25	11.75
	T*9X*B12	FC/MC/PC18B	17	590	17.9	12.8	14.25	11.75
	T*(8,L)X*A12	FC/MC/PC24A	14	595	18.5	13.2	14.70	12.00
	T*(8,L)X*B12	FC/MC/PC24B	17	620	18.4	13.1	14.75	12.00
	T*9X*B12	FC/MC/PC24B	17	615	18.5	13.2	14.75	12.00
	T*(8,L)X*A12	FC/MC/PC30A	14	595	18.5	13.2	14.70	12.00
	T*(8,L)X*B12	FC/MC/PC30B	17	620	18.4	13.1	14.75	12.00
	T*9X*B12	FC/MC/PC30B	17	615	18.5	13.2	14.75	12.00
	T*(8,L)X*A12	FC/MC/PC32A	14	590	18.4	13.1	14.55	12.00
	T*(8,L)X*A12	HD24	14	605	19.0	13.9	13.75	12.25
	T*(8,L)X*B12	HD24	17	655	18.6	14.3	14.75	12.00
	T*(8,L)X*C16	HD24	21	650	18.1	14.0	15.00	11.50
	T*9X*B12	HD24	17	630	19.0	13.9	13.75	12.25
	T*(8,L)X*A12	UC18A	14	590	18.1	12.8	14.50	11.75
	T*(8,L)X*B12	UC18B	17	595	18.0	12.7	14.50	11.75
	T*9X*B12	UC18B	17	590	18.1	12.8	14.50	11.75
	T*(8,L)X*A12	UC24A	14	570	18.4	13.0	14.75	12.00
	T*(8,L)X*B12	UC24B	17	575	18.4	13.0	14.75	12.00
	T*9X*B12	UC24B	17	615	18.7	13.5	14.75	12.00
	T*(8,L)X*A12	UC30A	14	570	18.4	13.0	14.75	12.00
	T*(8,L)X*B12	UC30B	17	625	18.4	13.3	15.00	12.25
	T*9X*B12	UC30B	17	615	18.7	13.5	14.75	12.00
	(Y*(8,L)C/T*8V)*A12	FC/MC/PC18A	14	620	18.1	13.0	14.50	12.05
	(Y*(8,L)C/T*8V)*B12	FC/MC/PC18B	17	580	17.9	12.7	14.50	12.05
	Y*9C*B12	FC/MC/PC18B	17	610	18.1	13.0	14.60	12.20
	(Y*(8,L)C/T*8V)*A12	FC/MC/PC24A	14	640	18.5	13.4	14.70	12.20
	(Y*(8,L)C/T*8V)*B12	FC/MC/PC24B	17	575	18.4	13.0	15.00	12.40
	Y*9C*B12	FC/MC/PC24B	17	610	18.5	13.4	14.85	12.30
	(Y*(8,L)C/T*8V)*A12	FC/MC/PC30A	14	640	18.5	13.4	14.70	12.20
	(Y*(8,L)C/T*8V)*B12	FC/MC/PC30B	17	575	18.4	13.0	15.00	12.40
	Y*9C*B12	FC/MC/PC30B	17	610	18.5	13.4	14.85	12.30
	(Y*(8,L)C/T*8V)*A12	FC/MC/PC32A	14	590	18.4	13.1	14.55	12.20
	(Y*(8,L)C/T*8V)*B12	FC/MC/PC35B	17	650	18.6	13.4	14.70	12.30
	Y*9C*B12	FC/MC/PC35B	17	570	18.4	12.9	14.70	12.30
	(Y*(8,L)C/T*8V)*C16	FC/MC/PC35C	21	600	18.6	13.4	15.05	12.55
	Y*9C*C16	FC/MC/PC35C	21	645	18.6	13.4	14.85	12.40
	(Y*(8,L)C/T*8V)*A12	FC/MC/PC36A	14	645	18.7	13.4	14.80	12.35
	(Y*(8,L)C/T*8V)*B12	FC/MC/PC36B	17	650	18.7	13.5	15.00	12.45
	Y*9C*B12	FC/MC/PC36B	17	635	18.7	13.5	15.00	12.45
	(Y*(8,L)C/T*8V)*C16	FC/MC/PC36C	21	595	18.8	13.5	15.20	12.65
	Y*9C*C16	FC/MC/PC36C	21	595	18.8	13.5	15.20	12.65
	(Y*(8,L)C/T*8V)*A12	FC/MC/PC37A	14	625	18.7	13.5	14.80	12.35
	(Y*(8,L)C/T*8V)*A12	HC18	14	620	18.1	13.0	14.50	12.05
	(Y*(8,L)C/T*8V)*A12	HC30	14	590	18.2	12.8	14.50	12.05
	(Y*(8,L)C/T*8V)*B12	HC36	17	650	18.7	13.6	14.75	12.40
	Y*9C*B12	HC36	17	570	18.4	12.9	14.70	12.30
	(Y*(8,L)C/T*8V)*A12	HD24	14	640	19.1	13.8	15.10	12.60
	(Y*(8,L)C/T*8V)*B12	HD24	17	575	19.0	13.4	15.30	12.75
	Y*9C*B12	HD24	17	610	19.2	13.9	15.20	12.70
	(Y*(8,L)C/T*8V)*A12	HD36	14	645	18.5	12.9	14.60	12.25
	(Y*(8,L)C/T*8V)*B12	HD36	17	650	18.5	12.9	14.70	12.30
	(Y*(8,L)C/T*8V)*C16	HD36	21	595	18.6	12.9	15.00	12.50

For notes see Page 16.

COOLING CAPACITY - With High Efficiency Motor Furnaces (Continued)

UNIT MODEL	FURNACE MODEL	COIL MODEL[1]	W	COOLING				
				RATED CFM	Net MBH		SEER	EER
					TOTAL	SENS.		
13 SEER AC WITH VARIABLE SPEED FURNACES[2]								
TCHD18S41S3	Y*9C*B12	HD36	17	635	18.5	12.9	14.75	12.35
	Y*9C*C16	HD36	21	595	18.6	12.9	15.00	12.50
	(Y*(8,L)C/T*8V)*A12	UC18A	14	620	18.2	13.1	14.55	12.10
	(Y*(8,L)C/T*8V)*B12	UC18B	17	580	18.0	12.7	14.50	12.15
	Y*9C*B12	UC18B	17	610	18.2	13.1	14.70	12.25
	(Y*(8,L)C/T*8V)*A12	UC24A	14	640	18.6	13.4	14.75	12.30
	(Y*(8,L)C/T*8V)*B12	UC24B	17	575	18.4	13.1	15.00	12.45
	Y*9C*B12	UC24B	17	610	18.7	13.4	14.85	12.40
	(Y*(8,L)C/T*8V)*A12	UC30A	14	640	18.6	13.4	14.75	12.30
	(Y*(8,L)C/T*8V)*B12	UC30B	17	575	18.4	13.1	15.00	12.45
	Y*9C*B12	UC30B	17	610	18.7	13.4	14.85	12.40
	(Y*(8,L)C/T*8V)*A12	UC36A	14	645	18.1	13.3	14.60	12.15
	(Y*(8,L)C/T*8V)*B12	UC36B	17	650	18.1	13.3	14.70	12.20
	Y*9C*B12	UC36B	17	635	18.1	13.4	14.75	12.25
	(Y*(8,L)C/T*8V)*C16	UC36C	21	595	17.9	12.8	14.60	12.25
	Y*9C*C16	UC36C	21	595	17.9	12.8	14.75	12.30
TCHD24S41S3	T*(8,L)X*A12	FC/MC/PC24A	14	775	23.4	17.3	14.50	11.75
	T*(8,L)X*B12	FC/MC/PC24B	17	835	23.6	17.7	14.50	12.00
	T*9X*B12	FC/MC/PC24B	17	775	23.4	17.3	14.50	11.75
	T*(8,L)X*A12	FC/MC/PC30A	14	775	23.4	17.2	14.25	11.75
	T*(8,L)X*B12	FC/MC/PC30B	17	835	23.6	17.7	14.50	12.00
	T*9X*B12	FC/MC/PC30B	17	775	23.4	17.2	14.25	12.00
	T*(8,L)X*A12	FC/MC/PC32A	14	800	23.6	17.6	14.75	12.00
	T*(8,L)X*B12	FC/MC/PC35B	17	850	23.6	17.8	14.75	12.00
	T*(8,L)X*C16	FC/MC/PC35C	21	625	22.8	15.9	14.25	11.75
	T*(8,L)X*C20	FC/MC/PC35C	21	885	23.6	18.1	14.75	12.00
	T*9X*B12	FC/MC/PC35B	17	785	23.8	17.7	14.75	12.00
	T*9X*C16	FC/MC/PC35C	21	715	23.4	16.9	14.50	12.00
	T*9X*C20	FC/MC/PC35C	21	825	23.6	17.6	14.50	12.00
	T*(8,L)X*A12	FC/MC/PC36A	14	815	23.6	17.7	14.50	12.00
	T*(8,L)X*B12	FC/MC/PC36B	17	835	23.8	17.8	14.75	12.00
	T*(8,L)X*C16	FC/MC/PC36C	21	675	23.2	16.4	14.50	11.75
	T*9X*B12	FC/MC/PC36B	17	775	23.6	17.6	14.50	12.00
	T*9X*C16	FC/MC/PC36C	21	770	23.8	17.4	14.75	12.25
	T*9X*C20	FC/MC/PC36C	21	810	23.6	17.6	14.50	12.00
	T*(8,L)X*A12	FC/MC/PC37A	14	840	24.0	18.2	14.40	12.00
	T*(8,L)X*B12	FC/MC/PC42B	17	865	24.2	18.4	14.75	12.00
	T*(8,L)X*C16	FC/MC/PC42C	21	725	23.6	17.0	14.50	12.00
	T*9X*B12	FC/MC/PC42B	17	805	23.8	17.8	14.75	12.00
	T*9X*C16	FC/MC/PC42C	21	805	23.8	17.9	15.00	12.25
	T*9X*C20	FC/MC/PC42C	21	790	23.6	17.6	14.50	12.00
	T*(8,L)X*B12	FC/MC/PC43B	17	865	24.0	18.5	14.70	12.25
	T*(8,L)X*C16	FC/MC/PC43C	21	655	23.0	16.2	14.25	11.75
	T*9X*B12	FC/MC/PC43B	17	800	24.0	18.0	14.75	12.00
	T*9X*C16	FC/MC/PC43C	21	735	23.6	17.2	14.75	12.00
	T*9X*C20	FC/MC/PC43C	21	790	24.0	17.8	14.50	12.00
	T*(8,L)X*C16	FC/MC/PC48C	21	685	23.6	16.8	14.50	12.00
	T*9X*C16	FC/MC/PC48C	21	770	24.2	17.9	15.00	12.25
	T*9X*C20	FC/MC/PC48C	21	815	24.2	18.2	14.75	12.00
	T*(8,L)X*A12	HD36	14	815	23.0	17.0	14.25	11.75
	T*(8,L)X*B12	HD36	17	855	23.0	17.0	14.25	11.75
	T*(8,L)X*C16	HD36	21	855	23.0	17.0	14.25	11.75

For notes see Page 16.

COOLING CAPACITY - With High Efficiency Motor Furnaces (Continued)

UNIT MODEL	FURNACE MODEL	COIL MODEL[1]	W	COOLING				
				RATED CFM	Net MBH		SEER	EER
					TOTAL	SENS.		
13 SEER AC WITH VARIABLE SPEED FURNACES[2]								
TCHD24S41S3	T*9X*B12	HD36	17	790	23.0	17.0	14.00	11.75
	T*(8,L)X*A12	UC24A	14	785	23.6	17.3	14.50	12.00
	T*(8,L)X*B12	UC24B	17	835	23.6	17.6	14.75	12.00
	T*9X*B12	UC24B	17	775	23.6	17.3	14.50	12.00
	T*(8,L)X*A12	UC30A	14	785	23.6	17.3	14.50	12.00
	T*(8,L)X*B12	UC30B	17	835	23.6	17.6	14.75	12.00
	T*9X*B12	UC30B	17	775	23.6	17.3	14.50	12.00
	T*(8,L)X*A12	UC36A	14	780	22.8	16.7	14.05	12.00
	T*(8,L)X*B12	UC36B	17	835	23.0	17.3	14.35	12.00
	T*(8,L)X*C16	UC36C	21	875	23.2	17.6	14.40	12.00
	T*9X*B12	UC36B	17	775	22.8	16.7	14.10	12.00
	T*9X*C16	UC36C	21	815	23.0	16.9	14.35	12.25
	T*9X*C20	UC36C	21	810	22.8	16.8	14.25	12.00
	T*(8,L)X*B12	UC42B	17	755	23.6	17.2	14.75	12.25
	T*(8,L)X*C16	UC42C	21	725	23.6	17.2	14.50	12.00
	T*9X*B12	UC42B	17	805	23.8	17.6	14.50	12.00
	T*9X*C16	UC42C	21	805	23.8	17.7	14.75	12.25
	T*9X*C20	UC42C	21	790	23.4	17.1	14.25	11.75
	T*(8,L)X*C16	UC48C	21	685	23.4	16.8	14.50	12.00
	T*9X*C16	UC48C	21	770	23.6	17.6	14.40	12.25
	T*9X*C20	UC48C	21	815	24.0	18.0	14.50	12.00
	(Y*(8,L)C/T*8V)*A12	FC/MC/PC24A	14	805	23.6	17.3	14.50	12.10
	(Y*(8,L)C/T*8V)*B12	FC/MC/PC24B	17	815	23.6	17.5	14.75	12.25
	Y*9C*B12	FC/MC/PC24B	17	790	23.4	17.2	14.50	12.10
	(Y*(8,L)C/T*8V)*A12	FC/MC/PC30A	14	805	23.6	17.2	14.50	12.10
	(Y*(8,L)C/T*8V)*B12	FC/MC/PC30B	17	815	23.6	17.3	14.70	12.30
	Y*9C*B12	FC/MC/PC30B	17	790	23.6	17.2	14.50	12.10
	(Y*(8,L)C/T*8V)*A12	FC/MC/PC32A	14	775	23.6	17.5	14.20	12.00
	(Y*(8,L)C/T*8V)*B12	FC/MC/PC35B	17	760	23.6	17.1	14.50	12.20
	Y*9C*B12	FC/MC/PC35B	17	815	23.8	17.6	14.30	12.15
	(Y*(8,L)C/T*8V)*C16	FC/MC/PC35C	21	855	24.0	18.1	14.75	12.45
	(Y*(8,L)C/T*8V)*C20	FC/MC/PC35C	21	740	23.6	17.2	14.90	12.55
	Y*9C*C16	FC/MC/PC35C	21	900	24.2	18.5	14.60	12.35
	Y*9C*C20	FC/MC/PC35C	21	755	23.6	17.2	14.65	12.35
	(Y*(8,L)C/T*8V)*A12	FC/MC/PC36A	14	805	23.6	17.4	14.50	12.15
	(Y*(8,L)C/T*8V)*B12	FC/MC/PC36B	17	765	23.8	17.5	14.75	12.35
	Y*9C*B12	FC/MC/PC36B	17	815	23.6	17.4	14.50	12.15
	(Y*(8,L)C/T*8V)*C16	FC/MC/PC36C	21	855	24.0	18.1	14.85	12.50
	(Y*(8,L)C/T*8V)*C20	FC/MC/PC36C	21	750	23.6	17.1	14.90	12.50
	Y*9C*C16	FC/MC/PC36C	21	785	23.8	17.5	14.75	12.35
	Y*9C*C20	FC/MC/PC36C	21	760	23.6	17.2	14.75	12.35
	(Y*(8,L)C/T*8V)*A12	FC/MC/PC37A	14	805	24.0	17.7	14.40	12.15
	(Y*(8,L)C/T*8V)*B12	FC/MC/PC43B	17	760	24.0	17.4	14.70	12.45
	Y*9C*B12	FC/MC/PC43B	17	800	24.0	17.8	14.60	12.30
	(Y*(8,L)C/T*8V)*C16	FC/MC/PC43C	21	895	24.4	18.9	14.90	12.60
	(Y*(8,L)C/T*8V)*C20	FC/MC/PC43C	21	760	24.0	17.5	15.05	12.70
	Y*9C*C16	FC/MC/PC43C	21	810	24.2	18.0	14.75	12.45
	Y*9C*C20	FC/MC/PC43C	21	890	24.4	18.8	14.85	12.50
	(Y*(8,L)C/T*8V)*C16	FC/MC/PC48C	21	815	24.4	18.4	15.15	12.80
	Y*9C*C16	FC/MC/PC48C	21	890	24.6	19.1	15.00	12.60
	(Y*(8,L)C/T*8V)*A12	HC18	14	775	22.8	16.5	14.00	11.65

For notes see Page 16.

COOLING CAPACITY - With High Efficiency Motor Furnaces (Continued)

UNIT MODEL	FURNACE MODEL	COIL MODEL[1]	W	COOLING				
				RATED CFM	Net MBH		SEER	EER
					TOTAL	SENS.		
13 SEER AC WITH VARIABLE SPEED FURNACES[2]								
TCHD24S41S3	(Y*(8,L)C/T*8V)*A12	HC30	14	775	23.4	17.2	14.10	12.00
	(Y*(8,L)C/T*8V)*B12	HC36	17	760	23.6	17.1	14.50	12.20
	Y*9C*B12	HC36	17	815	23.8	17.6	14.35	12.15
	(Y*(8,L)C/T*8V)*C16	HC42	21	895	24.4	18.9	14.90	12.60
	(Y*(8,L)C/T*8V)*C20	HC42	21	760	24.0	17.5	15.05	12.70
	Y*9C*C16	HC42	21	810	24.2	18.0	14.75	12.45
	Y*9C*C20	HC42	21	890	24.4	18.9	14.85	12.50
	(Y*(8,L)C/T*8V)*A12	HD24	14	805	24.0	17.6	14.60	12.30
	(Y*(8,L)C/T*8V)*B12	HD24	17	815	24.0	17.6	14.85	12.50
	Y*9C*B12	HD24	17	790	24.0	17.6	14.60	12.30
	(Y*(8,L)C/T*8V)*A12	HD36	14	805	23.4	16.8	14.30	12.10
	(Y*(8,L)C/T*8V)*B12	HD36	17	760	23.4	16.5	14.35	12.10
	(Y*(8,L)C/T*8V)*C16	HD36	21	855	23.8	17.4	14.70	12.35
	(Y*(8,L)C/T*8V)*C20	HD36	21	750	23.4	16.4	14.75	12.40
	Y*9C*B12	HD36	17	815	23.4	16.8	14.35	12.15
	Y*9C*C16	HD36	21	785	23.6	16.8	14.60	12.35
	Y*9C*C20	HD36	21	760	23.4	16.6	14.60	12.30
	(Y*(8,L)C/T*8V)*A12	UC24A	14	805	23.6	17.4	14.55	12.10
	(Y*(8,L)C/T*8V)*B12	UC24B	17	815	23.6	17.4	14.80	12.25
	Y*9C*B12	UC24B	17	790	23.6	17.4	14.55	12.05
	(Y*(8,L)C/T*8V)*A12	UC30A	14	805	23.6	17.4	14.55	12.10
	(Y*(8,L)C/T*8V)*B12	UC30B	17	815	23.6	17.4	14.80	12.25
	Y*9C*B12	UC30B	17	790	23.6	17.4	14.55	12.05
	(Y*(8,L)C/T*8V)*A12	UC36A	14	805	22.8	16.7	14.05	11.85
	(Y*(8,L)C/T*8V)*B12	UC36B	17	765	23.0	16.8	14.35	12.05
	Y*9C*B12	UC36B	17	815	22.8	16.7	14.10	12.00
	(Y*(8,L)C/T*8V)*C16	UC36C	21	855	23.2	17.4	14.40	12.10
	(Y*(8,L)C/T*8V)*C20	UC36C	21	750	22.8	16.4	14.55	12.15
	Y*9C*C16	UC36C	21	785	23.0	16.8	14.35	12.05
	Y*9C*C20	UC36C	21	760	22.8	16.5	14.35	12.05
	(Y*(8,L)C/T*8V)*C16	UC48C	21	815	23.4	17.3	14.65	12.25
	Y*9C*C16	UC48C	21	880	23.6	17.9	14.40	12.15
TCHD30S41S3	T*(8,L)X*A12	FC/MC/PC30A	14	1065	28.2	21.1	14.05	12.50
	T*(8,L)X*B12	FC/MC/PC30B	17	945	27.8	20.3	14.50	12.75
	T*9X*B12	FC/MC/PC30B	17	1065	28.2	21.1	14.25	12.50
	T*(8,L)X*A12	FC/MC/PC32A	14	970	28.0	20.7	13.65	12.25
	T*(8,L)X*B12	FC/MC/PC35B	17	1090	28.4	21.6	14.50	12.75
	T*(8,L)X*C16	FC/MC/PC35C	21	1090	28.4	21.6	14.75	13.00
	T*(8,L)X*C20	FC/MC/PC35C	21	850	27.8	20.1	14.75	13.00
	T*9X*B12	FC/MC/PC35B	17	1085	28.2	21.4	14.25	12.75
	T*9X*C16	FC/MC/PC35C	21	1075	28.4	21.5	14.75	13.00
	T*(8,L)X*A12	FC/MC/PC36A	14	995	28.2	20.7	14.00	12.25
	T*(8,L)X*B12	FC/MC/PC36B	17	1075	28.4	21.5	14.50	12.50
	T*(8,L)X*C16	FC/MC/PC36C	21	1090	28.4	21.2	14.75	13.00
	T*(8,L)X*C20	FC/MC/PC36C	21	890	28.0	20.3	15.00	13.00
	T*9X*B12	FC/MC/PC36B	17	1070	28.4	21.3	14.50	12.50
	T*9X*C16	FC/MC/PC36C	21	1070	28.4	21.3	14.50	12.75
	T*(8,L)X*A12	FC/MC/PC37A	14	1105	28.8	22.2	14.50	13.00
	T*(8,L)X*B12	FC/MC/PC42B	17	1045	27.8	20.9	14.25	12.25
	T*(8,L)X*C20	FC/MC/PC42C	21	920	27.0	19.9	14.50	12.50
	T*9X*B12	FC/MC/PC42B	17	1045	27.8	20.9	14.25	12.25
	T*9X*C16	FC/MC/PC42C	21	1035	27.6	20.3	14.25	12.25

For notes see Page 16.

COOLING CAPACITY - With High Efficiency Motor Furnaces (Continued)

UNIT MODEL	FURNACE MODEL	COIL MODEL[1]	W	COOLING				
				RATED CFM	Net MBH		SEER	EER
					TOTAL	SENS.		
13 SEER AC WITH VARIABLE SPEED FURNACES[2]								
TCHD30S41S3	T*(8,L)X*B12	FC/MC/PC43B	17	1115	28.8	21.6	14.25	12.25
	T*(8,L)X*C20	FC/MC/PC43C	21	870	26.4	21.3	14.50	12.50
	T*9X*B12	FC/MC/PC43B	17	1095	28.8	21.6	14.25	12.25
	T*9X*C16	FC/MC/PC43C	21	1055	28.8	21.1	14.25	12.25
	T*(8,L)X*C20	FC/MC/PC48C	21	890	28.8	20.9	15.50	13.50
	T*9X*C16	FC/MC/PC48C	21	1075	29.4	22.6	15.25	13.25
	T*(8,L)X*A12	HD36	14	1065	28.0	21.0	14.00	12.50
	T*(8,L)X*B12	HD36	17	1065	28.0	21.0	14.00	12.50
	T*(8,L)X*C16	HD36	21	1065	28.2	21.1	14.00	12.75
	T*9X*B12	HD36	17	1065	28.0	21.0	14.00	12.50
	T*(8,L)X*A12	UC30A	14	1065	28.2	21.3	14.00	12.50
	T*(8,L)X*B12	UC30B	17	945	28.0	20.5	14.50	12.75
	T*9X*B12	UC30B	17	1065	28.2	21.3	14.30	12.50
	T*(8,L)X*A12	UC36A	14	995	26.8	19.5	13.50	11.75
	T*(8,L)X*B12	UC36B	17	1065	28.2	21.3	14.50	12.50
	T*(8,L)X*C16	UC36C	21	1075	28.4	21.3	14.75	12.75
	T*(8,L)X*C20	UC36C	21	890	26.6	19.4	14.25	12.25
	T*9X*B12	UC36B	17	1070	28.2	21.3	14.50	12.50
	T*9X*C16	UC36C	21	1070	28.4	21.3	14.50	12.75
	T*(8,L)X*B12	UC42B	17	1025	27.2	20.3	13.75	12.00
	T*(8,L)X*C16	UC42C	21	825	26.0	18.2	14.25	12.25
	T*(8,L)X*C20	UC42C	21	950	27.0	19.5	14.50	12.50
	T*9X*B12	UC42B	17	1025	27.2	20.3	13.75	12.00
	T*9X*C16	UC42C	21	1030	27.4	20.3	14.00	12.25
	T*(8,L)X*C16	UC48C	21	815	26.4	18.9	14.50	12.50
	T*(8,L)X*C20	UC48C	21	960	27.4	20.1	14.75	12.75
	T*9X*C16	UC48C	21	1035	27.6	20.7	14.25	12.25
	(Y*(8,L)C/T*8V)*A12	FC/MC/PC30A	14	1055	28.2	21.4	14.05	12.40
	(Y*(8,L)C/T*8V)*B12	FC/MC/PC30B	17	955	28.2	21.0	15.00	13.15
	Y*9C*B12	FC/MC/PC30B	17	1050	28.2	21.2	14.50	12.75
	(Y*(8,L)C/T*8V)*A12	FC/MC/PC32A	14	1045	28.0	21.0	13.65	12.10
	(Y*(8,L)C/T*8V)*B12	FC/MC/PC35B	17	995	28.4	21.2	14.50	13.00
	Y*9C*B12	FC/MC/PC35B	17	1045	28.2	21.6	14.25	12.50
	(Y*(8,L)C/T*8V)*C16	FC/MC/PC35C	21	1025	28.4	21.4	15.00	13.15
	(Y*(8,L)C/T*8V)*C20	FC/MC/PC35C	21	1080	28.8	22.2	15.05	13.20
	Y*9C*C16	FC/MC/PC35C	21	1005	28.4	21.4	15.00	13.10
	Y*9C*C20	FC/MC/PC35C	21	985	28.4	21.4	15.00	13.10
	(Y*(8,L)C/T*8V)*A12	FC/MC/PC36A	14	1000	28.2	21.0	14.50	12.75
	(Y*(8,L)C/T*8V)*B12	FC/MC/PC36B	17	985	28.4	21.0	14.80	13.05
	Y*9C*B12	FC/MC/PC36B	17	985	28.4	21.0	14.70	13.00
	(Y*(8,L)C/T*8V)*C16	FC/MC/PC36C	21	1020	28.4	21.2	15.00	13.15
	(Y*(8,L)C/T*8V)*C20	FC/MC/PC36C	21	1055	28.8	21.8	15.20	13.35
	Y*9C*C16	FC/MC/PC36C	21	1005	28.4	21.2	15.00	13.20
	Y*9C*C20	FC/MC/PC36C	21	1045	28.4	21.0	14.75	13.05
	(Y*(8,L)C/T*8V)*A12	FC/MC/PC37A	14	980	28.8	21.6	14.50	12.80
	(Y*(8,L)C/T*8V)*B12	FC/MC/PC43B	17	990	28.8	21.8	15.00	13.20
	Y*9C*B12	FC/MC/PC43B	17	1035	28.8	21.6	14.50	12.85
	(Y*(8,L)C/T*8V)*C16	FC/MC/PC43C	21	990	29.0	21.8	15.35	13.60
	(Y*(8,L)C/T*8V)*C20	FC/MC/PC43C	21	1000	29.0	21.8	15.40	13.65
	Y*9C*C16	FC/MC/PC43C	21	1030	28.8	21.6	14.80	13.15
	Y*9C*C20	FC/MC/PC43C	21	995	29.0	21.8	15.20	13.45
	(Y*(8,L)C/T*8V)*A12	HC30	14	1030	27.6	20.6	13.50	12.00
	(Y*(8,L)C/T*8V)*B12	HC36	17	995	28.4	21.2	14.50	13.00
	Y*9C*B12	HC36	17	1045	28.2	21.6	14.30	12.50

For notes see Page 16.

COOLING CAPACITY - With High Efficiency Motor Furnaces (Continued)

UNIT MODEL	FURNACE MODEL	COIL MODEL[1]	W	COOLING				
				RATED CFM	Net MBH		SEER	EER
					TOTAL	SENS.		
13 SEER AC WITH VARIABLE SPEED FURNACES[2]								
TCHD30S41S3	(Y*(8,L)C/T*8V)*C16	HC42	21	990	29.0	21.8	15.35	13.60
	(Y*(8,L)C/T*8V)*C20	HC42	21	1000	29.0	21.8	15.40	13.65
	Y*9C*C16	HC42	21	1030	28.8	21.8	14.80	13.15
	Y*9C*C20	HC42	21	995	29.0	21.8	15.20	13.45
	(Y*(8,L)C/T*8V)*A12	HD36	14	1000	28.0	20.2	14.30	12.65
	(Y*(8,L)C/T*8V)*B12	HD36	17	985	28.0	20.4	14.65	13.00
	(Y*(8,L)C/T*8V)*C16	HD36	21	1020	28.2	20.4	14.80	13.05
	(Y*(8,L)C/T*8V)*C20	HD36	21	1055	28.4	21.0	15.00	13.25
	Y*9C*B12	HD36	17	985	28.0	20.4	14.60	12.85
	Y*9C*C16	HD36	21	1005	28.2	20.4	14.85	13.05
	Y*9C*C20	HD36	21	1045	28.0	20.4	14.65	13.00
	(Y*(8,L)C/T*8V)*A12	UC30A	14	1055	28.2	21.6	14.00	12.40
	(Y*(8,L)C/T*8V)*B12	UC30B	17	955	28.4	21.0	15.00	13.20
	Y*9C*B12	UC30B	17	1000	28.2	20.8	14.30	12.70
	(Y*(8,L)C/T*8V)*A12	UC36A	14	1000	28.2	20.8	14.30	12.70
	(Y*(8,L)C/T*8V)*B12	UC36B	17	985	28.2	21.0	14.65	13.00
	Y*9C*B12	UC36B	17	985	28.2	21.0	14.55	13.00
	(Y*(8,L)C/T*8V)*C16	UC36C	21	1020	28.4	21.0	14.80	13.10
	(Y*(8,L)C/T*8V)*C20	UC36C	21	1035	27.8	21.0	14.75	13.00
	Y*9C*C16	UC36C	21	1000	28.4	21.0	14.80	13.10
	Y*9C*C20	UC36C	21	1045	28.2	21.0	14.65	13.00
TCHD36S41S3	T*(8,L)X*A12	FC/MC/PC32A	14	1160	32.6	23.6	13.45	11.50
	T*(8,L)X*B12	FC/MC/PC35B	17	1275	33.4	24.8	13.55	11.75
	T*(8,L)X*C16	FC/MC/PC35C	21	1105	33.6	24.3	14.20	12.25
	T*(8,L)X*C20	FC/MC/PC35C	21	1225	33.8	24.9	14.25	12.25
	T*9X*B12	FC/MC/PC35B	17	1265	33.4	24.8	13.65	11.75
	T*9X*C16	FC/MC/PC35C	21	1270	33.6	25.0	14.00	12.00
	T*9X*C20	FC/MC/PC35C	21	1195	33.6	24.3	13.80	12.00
	T*(8,L)X*A12	FC/MC/PC36A	14	1185	33.0	24.1	13.25	11.50
	T*(8,L)X*B12	FC/MC/PC36B	17	1255	33.2	24.5	13.50	11.75
	T*(8,L)X*C16	FC/MC/PC36C	21	1100	33.2	23.7	14.00	12.00
	T*(8,L)X*C20	FC/MC/PC36C	21	1265	33.6	24.8	14.25	12.25
	T*9X*B12	FC/MC/PC36B	17	1245	33.2	24.7	13.50	11.50
	T*9X*C16	FC/MC/PC36C	21	1265	33.6	25.1	13.75	12.00
	T*9X*C20	FC/MC/PC36C	21	1195	33.2	24.3	13.75	12.00
	T*(8,L)X*A12	FC/MC/PC37A	14	1290	33.0	24.8	14.05	12.00
	T*(8,L)X*B12	FC/MC/PC42B	17	1160	32.4	23.7	13.50	11.75
	T*(8,L)X*C16	FC/MC/PC42C	21	1200	32.6	23.7	14.00	12.00
	T*(8,L)X*C20	FC/MC/PC42C	21	1240	33.0	24.3	14.25	12.00
	T*9X*B12	FC/MC/PC42B	17	1235	32.8	24.1	13.50	11.50
	T*9X*C16	FC/MC/PC42C	21	1235	32.8	24.1	13.75	11.50
	T*9X*C20	FC/MC/PC42C	21	1185	32.4	23.5	13.50	11.50
	T*(8,L)X*B12	FC/MC/PC43B	17	1300	34.2	25.7	14.00	12.00
	T*(8,L)X*C16	FC/MC/PC43C	21	1175	34.4	25.3	14.75	12.50
	T*(8,L)X*C20	FC/MC/PC43C	21	1250	34.6	26.1	15.00	12.50
	T*9X*B12	FC/MC/PC43B	17	1270	34.2	25.7	14.00	12.00
	T*9X*C16	FC/MC/PC43C	21	1260	34.2	25.9	14.20	12.25
	T*9X*C20	FC/MC/PC43C	21	1185	34.2	25.3	14.65	12.25
	T*(8,L)X*C16	FC/MC/PC48C	21	1185	34.8	25.9	15.10	12.75
	T*(8,L)X*C20	FC/MC/PC48C	21	1270	35.2	26.4	15.00	12.75
	T*9X*C16	FC/MC/PC48C	21	1280	35.0	26.3	14.50	12.50
	T*9X*C20	FC/MC/PC48C	21	1205	34.6	25.7	14.55	12.50

For notes see Page 16.

COOLING CAPACITY - With High Efficiency Motor Furnaces (Continued)

UNIT MODEL	FURNACE MODEL	COIL MODEL[1]	W	COOLING				
				RATED CFM	Net MBH		SEER	EER
					TOTAL	SENS.		
13 SEER AC WITH VARIABLE SPEED FURNACES[2]								
	T*9X*D20	FC/MC/PC48D	24	1240	34.8	25.7	14.75	12.50
	T*(8,L)X*A12	HD36	14	1270	33.2	24.2	13.40	11.75
	T*(8,L)X*B12	HD36	17	1270	33.2	24.2	13.70	11.75
	T*9X*B12	HD36	17	1270	33.4	24.4	13.85	11.75
	T*(8,L)X*C16	HD48	21	1120	34.2	24.9	14.00	12.50
	T*(8,L)X*C20	HD48	21	1245	34.8	26.0	14.00	12.75
	T*9X*C20	HD48	21	1245	34.8	26.0	14.00	12.75
	T*9X*D20	HD48	24	1260	34.8	26.3	14.00	12.75
	T*(8,L)X*B12	UC36B	17	1205	32.0	23.5	13.00	11.00
	T*(8,L)X*C16	UC36C	21	1180	32.4	23.7	13.75	11.75
	T*(8,L)X*C20	UC36C	21	1225	32.6	24.5	13.75	11.75
	T*9X*B12	UC36B	17	1195	31.8	23.5	13.00	11.00
	T*9X*C16	UC36C	21	1205	32.0	23.5	13.00	11.25
	T*9X*C20	UC36C	21	1195	32.2	23.7	13.25	11.50
	T*(8,L)X*B12	UC42B	17	1215	32.4	23.3	13.00	11.25
	T*(8,L)X*C16	UC42C	21	1170	32.4	23.1	13.75	11.75
	T*(8,L)X*C20	UC42C	21	1225	32.6	23.7	13.75	11.75
	T*9X*B12	UC42B	17	1215	32.4	23.5	13.00	11.25
	T*9X*C16	UC42C	21	1215	32.4	23.5	13.25	11.50
	T*9X*C20	UC42C	21	1185	32.6	23.5	13.50	11.50
	T*(8,L)X*C16	UC48C	21	1185	32.8	23.9	14.25	12.00
	T*(8,L)X*C20	UC48C	21	1245	33.2	24.7	14.00	12.00
	T*9X*C16	UC48C	21	1240	33.0	24.3	13.50	11.75
	T*9X*C20	UC48C	21	1205	32.6	23.7	13.75	11.75
	T*9X*D20	UC48D	24	1225	32.6	23.7	13.75	11.75
TCHD36S41S3	(Y*(8,L)C/T*8V)*A12	FC/MC/PC32A	14	1045	32.6	23.0	13.45	11.70
	(Y*(8,L)C/T*8V)*B12	FC/MC/PC35B	17	1220	33.4	24.6	13.55	11.75
	Y*9C*B12	FC/MC/PC35B	17	1190	33.4	24.6	13.65	11.85
	(Y*(8,L)C/T*8V)*C16	FC/MC/PC35C	21	1235	33.6	24.8	14.20	12.30
	(Y*(8,L)C/T*8V)*C20	FC/MC/PC35C	21	1170	33.8	24.8	14.50	12.55
	Y*9C*C16	FC/MC/PC35C	21	1215	33.6	24.8	14.05	12.15
	Y*9C*C20	FC/MC/PC35C	21	1275	34.2	25.4	13.80	12.00
	(Y*(8,L)C/T*8V)*A12	FC/MC/PC36A	14	1190	33.2	24.2	13.55	11.70
	(Y*(8,L)C/T*8V)*B12	FC/MC/PC36B	17	1220	33.2	24.2	13.85	12.00
	Y*9C*B12	FC/MC/PC36B	17	1165	33.4	24.2	14.00	12.05
	(Y*(8,L)C/T*8V)*C16	FC/MC/PC36C	21	1235	33.4	24.4	14.30	12.30
	(Y*(8,L)C/T*8V)*C20	FC/MC/PC36C	21	1240	33.6	24.4	14.50	12.40
	Y*9C*C16	FC/MC/PC36C	21	1185	33.6	24.4	14.35	12.35
	Y*9C*C20	FC/MC/PC36C	21	1270	34.0	25.2	14.00	12.10
	(Y*(8,L)C/T*8V)*A12	FC/MC/PC37A	14	980	33.0	23.0	14.05	12.15
	(Y*(8,L)C/T*8V)*B12	FC/MC/PC43B	17	1210	34.2	25.2	14.00	12.10
	Y*9C*B12	FC/MC/PC43B	17	1200	34.2	25.2	14.00	12.10
	(Y*(8,L)C/T*8V)*C16	FC/MC/PC43C	21	1205	34.4	25.4	14.75	12.70
	(Y*(8,L)C/T*8V)*C20	FC/MC/PC43C	21	1190	34.6	25.4	15.00	12.85
	Y*9C*C16	FC/MC/PC43C	21	1240	34.2	25.2	14.20	12.25
	Y*9C*C20	FC/MC/PC43C	21	1200	34.4	25.4	14.65	12.60
	(Y*(8,L)C/T*8V)*C16	FC/MC/PC48C	21	1210	35.0	26.0	15.10	13.00
	(Y*(8,L)C/T*8V)*C20	FC/MC/PC48C	21	1155	35.2	26.0	15.35	13.20
	Y*9C*C16	FC/MC/PC48C	21	1195	35.0	25.8	14.85	12.80
	Y*9C*C20	FC/MC/PC48C	21	1315	35.2	26.8	14.55	12.55
	Y*9C*D20	FC/MC/PC48D	24	1240	35.2	26.2	15.00	13.00

For notes see Page 16.

COOLING CAPACITY - With High Efficiency Motor Furnaces (Continued)

UNIT MODEL	FURNACE MODEL	COIL MODEL[1]	W	COOLING				
				RATED CFM	Net MBH		SEER	EER
					TOTAL	SENS.		
13 SEER AC WITH VARIABLE SPEED FURNACES[2]								
TCHD36S41S3	(Y*(8,L)C/T*8V)*B12	HC36	17	1220	33.4	24.4	13.55	11.80
	Y*9C*B12	HC36	17	1190	33.2	24.0	13.60	11.75
	(Y*(8,L)C/T*8V)*C16	HC42	21	1205	34.6	25.4	14.75	12.75
	(Y*(8,L)C/T*8V)*C20	HC42	21	1190	34.6	25.6	15.00	13.00
	Y*9C*C16	HC42	21	1240	34.4	25.2	14.25	12.30
	Y*9C*C20	HC42	21	1200	34.6	25.4	14.65	12.65
	Y*9C*D20	HC60	24	1225	33.6	24.8	14.50	12.45
	(Y*(8,L)C/T*8V)*A12	HD36	14	1190	33.2	23.4	13.40	11.70
	(Y*(8,L)C/T*8V)*B12	HD36	17	1220	33.2	23.6	13.70	12.00
	(Y*(8,L)C/T*8V)*C16	HD36	21	1235	33.4	23.6	14.15	12.30
	(Y*(8,L)C/T*8V)*C20	HD36	21	1240	33.6	23.6	14.30	12.40
	Y*9C*B12	HD36	17	1165	33.4	23.6	13.85	12.05
	Y*9C*C16	HD36	21	1185	33.4	23.6	14.20	12.35
	Y*9C*C20	HD36	21	1265	33.8	24.6	13.85	12.05
	(Y*(8,L)C/T*8V)*B12	HD48	17	1210	34.6	25.2	14.50	12.45
	(Y*(8,L)C/T*8V)*C16	HD48	21	1210	34.8	25.4	15.00	13.00
	(Y*(8,L)C/T*8V)*C20	HD48	21	1155	34.8	25.4	15.20	13.05
	Y*9C*B12	HD48	17	1150	34.4	25.2	14.25	12.35
	Y*9C*C16	HD48	21	1195	34.6	25.2	14.70	12.70
	Y*9C*C20	HD48	21	1300	34.8	26.2	14.35	12.40
	Y*9C*D20	HD48	24	1225	34.8	25.6	15.00	12.85
	(Y*(8,L)C/T*8V)*B12	UC36B	17	1210	32.4	23.2	13.45	11.65
	Y*9C*B12	UC36B	17	1165	32.6	23.4	13.60	11.75
	(Y*(8,L)C/T*8V)*C16	UC36C	21	1215	32.6	23.4	14.00	12.00
	(Y*(8,L)C/T*8V)*C20	UC36C	21	1225	32.8	23.4	14.05	12.10
	Y*9C*C16	UC36C	21	1185	32.6	23.4	14.00	12.05
	Y*9C*C20	UC36C	21	1235	33.0	24.6	13.65	11.75
	(Y*(8,L)C/T*8V)*C16	UC48C	21	1210	33.6	24.8	14.55	12.45
	(Y*(8,L)C/T*8V)*C20	UC48C	21	1155	33.6	24.8	14.75	12.60
	Y*9C*C16	UC48C	21	1195	33.4	24.6	14.25	12.25
	Y*9C*C20	UC48C	21	1265	33.8	25.4	14.00	12.00
	Y*9C*D20	UC48D	24	1240	33.4	24.6	14.35	12.30
TCHD48S41S3	T*(8,L)X*C16	FC/MC/PC48C	21	1600	47.0	34.0	13.50	11.50
	T*(8,L)X*C20	FC/MC/PC48C	21	1660	47.5	34.6	13.50	11.75
	T*9X*C16	FC/MC/PC48C	21	1565	47.0	33.6	13.25	11.50
	T*9X*C20	FC/MC/PC48C	21	1615	47.0	34.2	13.50	11.50
	T*9X*D20	FC/MC/PC48D	24	1635	47.0	34.2	13.50	11.50
	T*(8,L)X*C16	FC/PC60C	21	1605	46.5	33.6	13.25	11.50
	T*(8,L)X*C20	FC/PC60C	21	1595	46.5	33.6	13.50	11.50
	T*(8,L)X*C20	FC/MC/PC60D	21	1595	46.5	33.6	13.50	11.50
	T*9X*C16	FC/PC60C	21	1575	45.5	33.6	13.00	11.25
	T*9X*C20	FC/PC60C	21	1625	45.5	33.6	13.25	11.25
	T*9X*D20	FC/MC/PC60D	24	1490	46.5	32.8	13.50	11.75
	T*(8,L)X*C16	FC/MC62D	21	1610	47.0	34.4	13.50	11.50
	T*(8,L)X*C20	FC/MC62D	21	1665	47.5	34.4	13.75	11.75
	T*9X*C16	FC/MC62D	21	1550	47.0	34.2	13.50	11.50
	T*9X*C20	FC/MC62D	21	1595	47.5	34.4	13.50	11.50
	T*9X*D20	FC/MC62D	24	1610	47.0	34.2	13.50	11.50
	T*(8,L)X*C16	HD48	21	1610	48.0	33.9	13.45	12.00
	T*(8,L)X*C20	HD48	21	1665	48.0	33.9	13.45	12.00
	T*9X*C16	HD48	21	1575	48.0	33.9	13.35	12.00
	T*9X*C20	HD48	21	1625	48.0	33.9	13.35	12.00

For notes see Page 16.

COOLING CAPACITY - With High Efficiency Motor Furnaces (Continued)

UNIT MODEL	FURNACE MODEL	COIL MODEL[1]	W	COOLING				
				RATED CFM	Net MBH		SEER	EER
					TOTAL	SENS.		
13 SEER AC WITH VARIABLE SPEED FURNACES[2]								
TCHD48S41S3	T*9X*D20	HD48	24	1645	48.0	33.9	13.35	12.00
	T*(8,L)X*C16	UC48C	21	1640	45.5	32.8	13.00	11.00
	T*(8,L)X*C20	UC48C	21	1515	45.0	31.6	13.05	11.50
	T*9X*C16	UC48C	21	1565	45.0	32.8	13.00	11.00
	T*9X*C20	UC48C	21	1615	45.5	32.8	13.00	11.25
	T*9X*D20	UC48D	24	1635	45.0	32.8	13.00	11.00
	T*(8,L)X*C16	UC60C	21	1640	45.5	32.4	13.00	11.25
	T*(8,L)X*C20	UC60C	21	1540	45.0	32.2	13.50	11.75
	T*(8,L)X*C20	UC60D	21	1540	45.0	32.2	13.75	11.75
	T*9X*D20	UC60D	24	1490	45.0	31.6	13.20	11.50
	(Y*(8,L)C/T*8V)*C16	FC/MC/PC48C	21	1615	47.0	34.2	13.50	11.70
	(Y*(8,L)C/T*8V)*C20	FC/MC/PC48C	21	1640	47.5	34.4	13.50	11.75
	Y*9C*C16	FC/MC/PC48C	21	1590	47.0	33.8	13.45	11.65
	Y*9C*C20	FC/MC/PC48C	21	1655	47.5	34.4	13.50	11.70
	Y*9C*D20	FC/MC/PC48D	24	1645	47.5	34.4	13.50	11.70
	Y*9C*D20	FC/MC/PC60D	24	1615	47.0	34.4	13.50	11.75
	Y*9C*D20	FC/MC62D	24	1630	47.5	34.6	13.65	11.85
	(Y*(8,L)C/T*8V)*C16	FC/PC60C	21	1625	47.5	34.4	13.60	11.80
	(Y*(8,L)C/T*8V)*C20	FC/PC60C	21	1605	47.5	34.6	14.00	12.05
	Y*9C*C16	FC/PC60C	21	1590	47.0	34.4	13.40	11.65
	Y*9C*C20	FC/PC60C	21	1655	47.0	34.4	13.35	11.65
	Y*9C*D20	HC60	24	1615	46.0	33.4	13.35	11.40
	(Y*(8,L)C/T*8V)*C16	HD48	21	1615	47.0	33.6	13.45	11.65
	(Y*(8,L)C/T*8V)*C20	HD48	21	1640	47.0	33.6	13.45	11.65
	Y*9C*C16	HD48	21	1590	47.0	33.6	13.35	11.60
	Y*9C*C20	HD48	21	1655	47.0	33.6	13.35	11.60
	Y*9C*D20	HD48	24	1645	47.0	33.6	13.35	11.60
	(Y*(8,L)C/T*8V)*C16	HD60	21	1625	47.5	34.4	13.70	11.85
	(Y*(8,L)C/T*8V)*C20	HD60	21	1605	47.5	34.6	14.00	12.05
	Y*9C*C16	HD60	21	1590	47.0	34.2	13.50	11.65
	Y*9C*C20	HD60	21	1655	47.0	34.2	13.50	11.65
	Y*9C*D20	HD60	24	1615	47.5	34.4	13.60	11.75
	(Y*(8,L)C/T*8V)*C16	UC48C	21	1615	45.5	33.2	13.10	11.35
	(Y*(8,L)C/T*8V)*C20	UC48C	21	1640	45.5	33.0	13.05	11.35
	Y*9C*C16	UC48C	21	1590	45.5	33.0	13.00	11.30
	Y*9C*C20	UC48C	21	1655	45.5	33.0	13.00	11.30
	Y*9C*D20	UC48D	24	1645	45.5	33.0	13.00	11.30
	(Y*(8,L)C/T*8V)*C16	UC60C	21	1625	46.0	32.8	13.30	11.50
	(Y*(8,L)C/T*8V)*C20	UC60C	21	1605	46.0	33.0	13.55	11.70
	Y*9C*C16	UC60C	21	1590	45.5	32.8	13.05	11.30
	Y*9C*C20	UC60C	21	1655	45.5	32.8	13.05	11.30
	Y*9C*D20	UC60D	24	1615	46.0	32.8	13.20	11.40
TCHD60S41S3	T*(8,L)X*C20	FC/MC62D	21	1665	56.5	38.2	13.25	11.25
	(Y*(8,L)C/T*8V)*C20	FC/MC62D	21	1615	56.5	38.5	13.30	11.30
	Y*9C*C20	FC/MC62D	21	1655	56.5	38.0	13.15	11.10
	Y*9C*D20	FC/MC62D	24	1630	56.5	38.0	13.30	11.20
	(Y*(8,L)C/T*8V)*C20	HD60	21	1605	56.0	37.8	13.40	11.40
	Y*9C*C20	HD60	21	1655	56.0	37.4	13.00	11.10
	Y*9C*D20	HD60	24	1615	56.0	37.6	13.10	11.15

1. MC coils available with a factory installed horizontal drain pan. See price pages for specific model number.
2. Variable speed furnaces have B.O.D (Blower on Delay) standard.

ACCESSORIES

Refer to Price Manual for specific model numbers.

Hard Start Kit - Required when using TXV indoor coil. Also, provides increased starting torque for areas with low voltage.

Model	Start Kit Numbers
18, 24, 30, 60	S1-2SA06704006
36	S1-2SA06715006
48	S1-2SA06708006

Off Cycle Timer Delay - Provides a 5-minute off cycle to prevent rapid recycling of the compressor.

Thermostats - Compatible thermostat controls are available through accessory sourcing. For optimum performance and installation, refer to the UPGNET “Low Voltage Wiring Diagram” document to select and apply controls.

SOUND POWER RATINGS*

UNIT MODEL	(dBA)
18	67
24	68
30	71
36	71
42	71
48	71
60	71

* Rated in accordance with ARI 270-95 Standards.

TYPICAL INSTALLATION

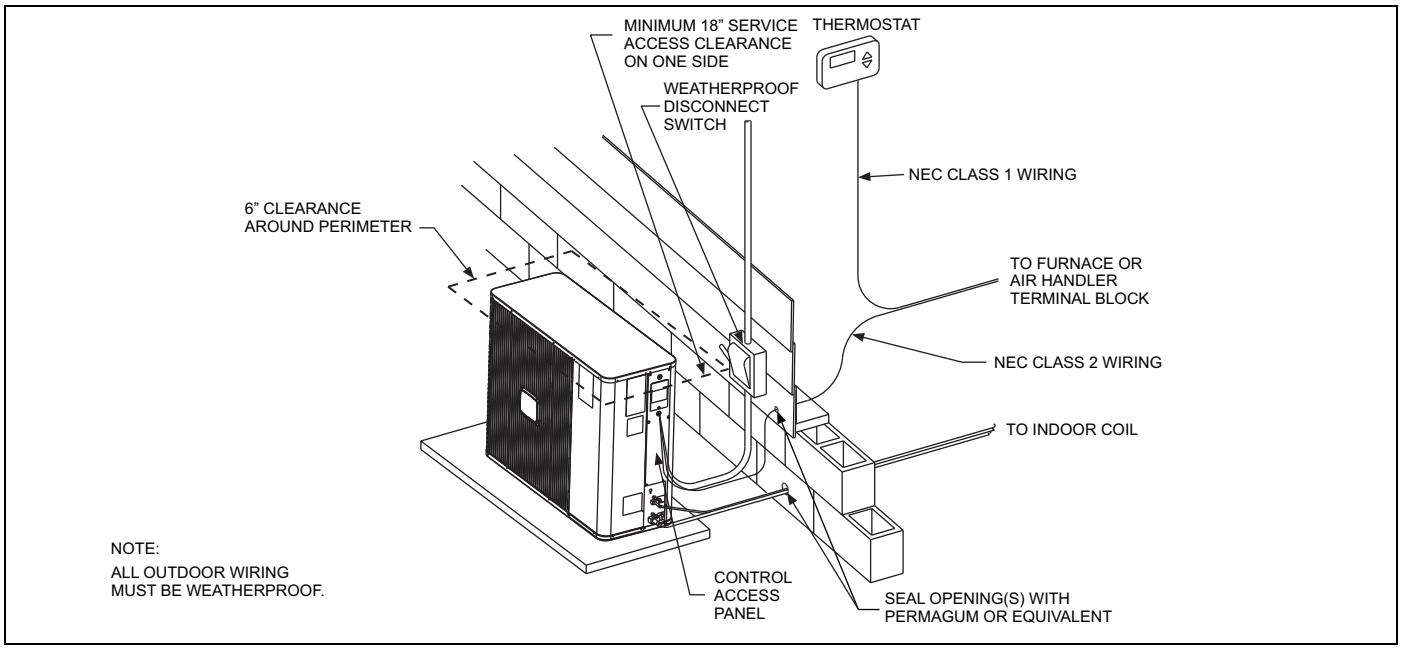

TYPICAL FIELD WIRING

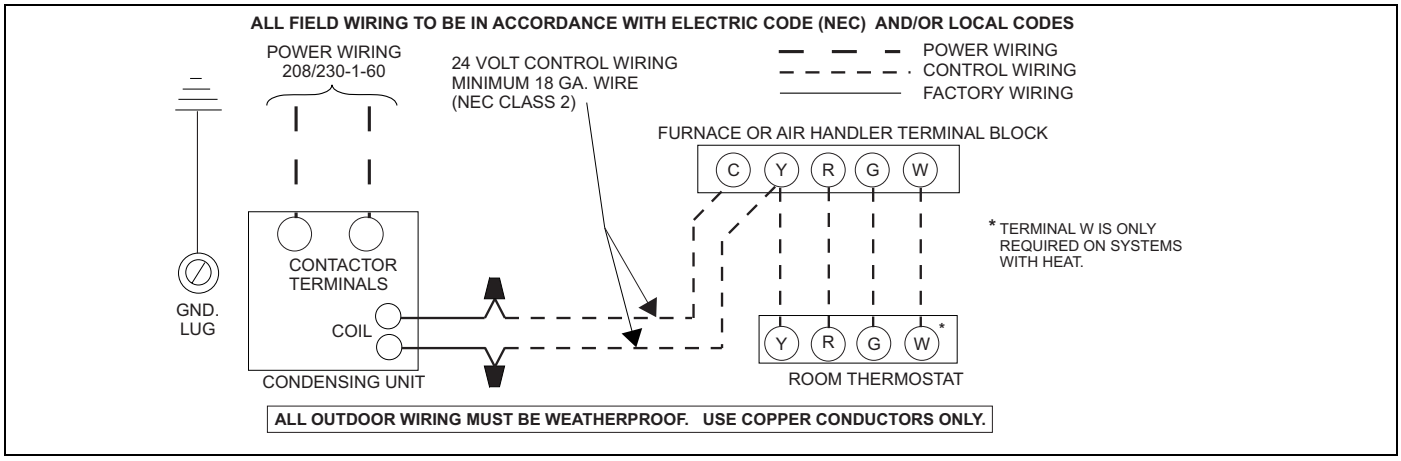

COOLING PERFORMANCE DATA

AIR CONDITIONER MODEL NO.		TCHD18S41S3														
INDOOR COIL MODEL NO.		FC/MC/PC24														
CONDENSING ENTERING AIR TEMPERATURE	IDCFM	450					600					750				
	ID DB (°F)	80	80	75	80	80	80	80	75	80	80	80	80	75	80	80
	ID WB (°F)	57	62	62	67	72	57	62	62	67	72	57	62	62	67	72
65	T.C.	17.3	18.2	18.6	19.7	21.5	18.9	19.0	19.2	20.6	22.5	20.4	19.7	19.8	21.5	23.4
	S.C.	16.6	14.5	12.6	12.2	9.9	18.0	16.9	14.3	14.2	10.7	19.4	19.3	15.9	16.2	11.6
	KW	1.07	1.08	1.09	1.08	1.07	1.07	1.07	1.09	1.07	1.07	1.07	1.07	1.08	1.07	1.08
75	T.C.	16.2	17.3	17.8	18.9	20.7	17.8	18.2	18.4	19.7	21.5	19.4	19.1	19.0	20.5	22.3
	S.C.	15.7	13.9	12.2	11.8	9.6	17.2	16.4	13.9	13.7	10.5	18.7	18.8	15.6	15.6	11.4
	KW	1.28	1.28	1.28	1.27	1.25	1.27	1.27	1.27	1.26	1.25	1.26	1.26	1.27	1.26	1.26
85	T.C.	15.1	16.5	16.9	18.1	20.0	16.7	17.5	17.6	18.9	20.5	18.3	18.5	18.2	19.6	21.1
	S.C.	14.8	13.3	11.8	11.4	9.3	16.4	15.8	13.5	13.1	10.2	18.0	18.4	15.3	14.9	11.2
	KW	1.48	1.48	1.47	1.46	1.44	1.46	1.46	1.46	1.45	1.43	1.44	1.44	1.46	1.44	1.43
95	T.C.	14.0	15.7	16.1	17.3	19.2	15.6	16.8	16.8	18.0	19.6	17.3	18.0	17.4	18.7	19.9
	S.C.	14.0	12.7	11.3	11.0	8.9	15.7	15.3	13.1	12.6	10.0	17.4	17.9	14.9	14.2	11.0
	KW	1.68	1.68	1.66	1.64	1.62	1.65	1.66	1.65	1.64	1.61	1.63	1.63	1.64	1.63	1.61
105	T.C.	13.4	14.5	14.9	16.0	18.1	14.8	15.6	15.6	16.8	18.5	16.3	16.7	16.2	17.6	18.9
	S.C.	13.3	12.2	10.7	10.4	8.5	14.8	14.5	12.4	12.0	9.5	16.3	16.7	14.1	13.7	10.5
	KW	2.16	2.12	2.11	2.12	1.93	2.08	2.06	2.07	2.04	1.92	1.99	1.99	2.02	1.95	1.91
115	T.C.	12.7	13.5	13.7	14.7	16.9	14.0	14.5	14.4	15.6	17.4	15.3	15.6	15.1	16.5	17.9
	S.C.	12.6	11.6	10.0	9.8	8.0	14.0	13.6	11.6	11.5	9.0	15.3	15.6	13.2	13.2	10.0
	KW	2.63	2.54	2.55	2.58	2.23	2.48	2.44	2.47	2.42	2.21	2.34	2.34	2.40	2.27	2.20
125	T.C.	12.1	12.4	12.6	13.4	15.8	13.2	13.4	13.2	14.4	16.3	14.3	14.4	13.9	15.5	16.8
	S.C.	12.0	11.1	9.4	9.2	7.6	13.1	12.8	10.9	10.9	8.5	14.3	14.5	12.4	12.7	9.5
	KW	3.10	2.97	3.00	3.04	2.53	2.89	2.83	2.88	2.81	2.51	2.69	2.68	2.77	2.58	2.49

NOTE: ALL CAPACITIES INCLUDE INDOOR FAN HEAT AT 1250 BTUH/1000 CFM.

Multipliers for determining the performance with other indoor sections.

NOTE: For dry bulb temperatures different than those listed (between 73-87 F), sensible capacity increases by 1060 BTUH per 1000 CFM per degree above the listed temperature and decreases by 1060 BTUH per 1000 CFM per degree below the listed temperature.

Air Handlers	Coils	T.C.	S.C.	KW
–	FC/MC/PC30	1.00	1.00	1.00
–	FC/MC/PC32	1.01	1.00	1.00
–	FC/MC/PC35	1.01	1.00	1.00
–	FC/MC/PC36	1.01	1.00	1.00
–	FC/MC/PC37	1.02	1.01	1.00
–	HC36	1.01	1.00	1.00
–	HD24	1.04	1.02	1.01
–	UC24	1.01	1.00	1.00
–	UC30	1.01	1.00	1.00
AHX18	–	1.01	1.04	0.95
AHX24	–	1.02	1.03	0.95
AHX30	–	1.03	1.06	0.95
AV*24	–	1.01	1.04	0.96
AV*36	–	1.06	1.10	0.97
F6FP018	–	0.99	1.00	0.97
F6FP024	–	1.03	1.04	0.98
F6FP030	–	1.03	1.05	0.98
MV12B	FC/MC18B	1.00	0.98	0.93
MV12B	FC/MC24B	1.02	1.02	0.93
MV12B	FC/MC30B	1.02	1.02	0.93

Continued on next page.

Furnaces	Coils	T.C.	S.C.	KW
T*(8,L)X*A12	FC/MC/PC18A	0.98	0.98	0.94
T*(8,L)X*B12	FC/MC/PC18B	0.99	1.00	0.93
T*9X*B12	FC/MC/PC18B	0.99	1.02	0.93
T*(8,L)X*A12	FC/MC/PC24A	1.03	1.05	0.94
T*(8,L)X*B12	FC/MC/PC24B	1.02	1.04	0.94
T*9X*B12	FC/MC/PC24B	1.03	1.05	0.94
T*(8,L)X*A12	FC/MC/PC30A	1.03	1.05	0.94
T*(8,L)X*B12	FC/MC/PC30B	1.02	1.04	0.94
T*9X*B12	FC/MC/PC30B	1.03	1.05	0.94
T*(8,L)X*A12	FC/MC/PC32A	1.02	1.04	0.94
T*(8,L)X*A12	HD24	1.06	1.10	0.95
T*(8,L)X*B12	HD24	1.03	1.13	0.95
T*(8,L)X*C16	HD24	1.01	1.11	0.96
T*9X*B12	HD24	1.06	1.10	0.95
T*(8,L)X*A12	UC18A	1.01	1.02	0.94
T*(8,L)X*B12	UC18B	1.00	1.01	0.94
T*9X*B12	UC18B	1.01	1.02	0.94
T*(8,L)X*A12	UC24A	1.02	1.03	0.94
T*(8,L)X*B12	UC24B	1.02	1.03	0.94
T*9X*B12	UC24B	1.04	1.07	0.95
T*(8,L)X*A12	UC30A	1.02	1.03	0.94
T*(8,L)X*B12	UC30B	1.02	1.06	0.92
T*9X*B12	UC30B	1.04	1.07	0.95
(Y*(8,L)C/T*8V)*A12	FC/MC/PC18A	1.01	1.03	0.92
(Y*(8,L)C/T*8V)*B12	FC/MC/PC18B	0.99	1.01	0.91
Y*9C*B12	FC/MC/PC18B	1.01	1.03	0.91
(Y*(8,L)C/T*8V)*A12	FC/MC/PC24A	1.03	1.06	0.93
(Y*(8,L)C/T*8V)*B12	FC/MC/PC24B	1.02	1.03	0.91
Y*9C*B12	FC/MC/PC24B	1.03	1.06	0.92
(Y*(8,L)C/T*8V)*A12	FC/MC/PC30A	1.03	1.06	0.93
(Y*(8,L)C/T*8V)*B12	FC/MC/PC30B	1.02	1.03	0.91
Y*9C*B12	FC/MC/PC30B	1.03	1.06	0.92
(Y*(8,L)C/T*8V)*A12	FC/MC/PC32A	1.02	1.04	0.92
(Y*(8,L)C/T*8V)*B12	FC/MC/PC35B	1.03	1.06	0.92

Furnaces	Coils	T.C.	S.C.	KW
Y*9C*B12	FC/MC/PC35B	1.02	1.02	0.91
(Y*(8,L)C/T*8V)*C16	FC/MC/PC35C	1.03	1.06	0.91
Y*9C*C16	FC/MC/PC35C	1.03	1.06	0.92
(Y*(8,L)C/T*8V)*A12	FC/MC/PC36A	1.04	1.06	0.93
(Y*(8,L)C/T*8V)*B12	FC/MC/PC36B	1.04	1.07	0.92
Y*9C*B12	FC/MC/PC36B	1.04	1.07	0.92
(Y*(8,L)C/T*8V)*C16	FC/MC/PC36C	1.04	1.07	0.91
Y*9C*C16	FC/MC/PC36C	1.04	1.07	0.91
(Y*(8,L)C/T*8V)*A12	FC/MC/PC37A	1.04	1.07	0.93
(Y*(8,L)C/T*8V)*A12	HC18	1.01	1.03	0.92
(Y*(8,L)C/T*8V)*A12	HC30	1.01	1.02	0.92
(Y*(8,L)C/T*8V)*B12	HC36	1.04	1.08	0.92
Y*9C*B12	HC36	1.02	1.02	0.91
(Y*(8,L)C/T*8V)*A12	HD24	1.06	1.10	0.93
(Y*(8,L)C/T*8V)*B12	HD24	1.06	1.06	0.91
Y*9C*B12	HD24	1.07	1.10	0.92
(Y*(8,L)C/T*8V)*A12	HD36	1.03	1.02	0.92
(Y*(8,L)C/T*8V)*B12	HD36	1.03	1.02	0.92
(Y*(8,L)C/T*8V)*C16	HD36	1.03	1.02	0.91
Y*9C*B12	HD36	1.03	1.02	0.92
Y*9C*C16	HD36	1.03	1.02	0.91
(Y*(8,L)C/T*8V)*A12	UC18A	1.01	1.04	0.92
(Y*(8,L)C/T*8V)*B12	UC18B	1.00	1.01	0.91
Y*9C*B12	UC18B	1.01	1.04	0.91
(Y*(8,L)C/T*8V)*A12	UC24A	1.03	1.06	0.92
(Y*(8,L)C/T*8V)*B12	UC24B	1.02	1.04	0.90
Y*9C*B12	UC24B	1.04	1.06	0.92
(Y*(8,L)C/T*8V)*A12	UC30A	1.03	1.06	0.92
(Y*(8,L)C/T*8V)*B12	UC30B	1.02	1.04	0.90
Y*9C*B12	UC30B	1.04	1.06	0.92
(Y*(8,L)C/T*8V)*A12	UC36A	1.01	1.06	0.91
(Y*(8,L)C/T*8V)*B12	UC36B	1.01	1.06	0.91
Y*9C*B12	UC36B	1.01	1.06	0.90
(Y*(8,L)C/T*8V)*C16	UC36C	0.99	1.02	0.89
Y*9C*C16	UC36C	0.99	1.02	0.89

COOLING PERFORMANCE DATA

AIR CONDITIONER MODEL NO.		TCHD24S41S3														
INDOOR COIL MODEL NO.		FC/MC/PC24														
CONDENSING ENTERING AIR TEMPERATURE	IDCFM	600					800					1000				
	ID DB (°F)	80	80	75	80	80	80	80	75	80	80	80	80	75	80	80
	ID WB (°F)	57	62	62	67	72	57	62	62	67	72	57	62	62	67	72
65	T.C.	19.8	23.1	22.5	24.9	29.0	22.4	23.8	23.6	25.9	29.9	25.0	24.6	24.8	27.0	30.9
	S.C.	20.1	19.1	15.9	15.9	12.8	22.8	21.6	18.3	17.9	14.0	25.4	24.0	20.7	20.0	15.2
	KW	1.32	1.32	1.34	1.36	1.36	1.35	1.32	1.35	1.37	1.34	1.37	1.33	1.36	1.38	1.33
75	T.C.	18.9	21.9	21.1	23.9	28.0	21.4	22.9	22.4	25.0	28.8	24.0	23.9	23.7	26.0	29.5
	S.C.	19.2	18.7	15.4	15.5	12.3	21.8	21.2	17.9	17.5	13.6	24.4	23.7	20.3	19.6	14.9
	KW	1.59	1.58	1.58	1.60	1.59	1.60	1.58	1.59	1.61	1.58	1.61	1.58	1.60	1.62	1.57
85	T.C.	18.0	20.8	19.6	23.0	27.0	20.5	22.0	21.1	24.0	27.6	23.0	23.2	22.6	25.0	28.2
	S.C.	18.2	18.2	15.0	15.1	11.9	20.8	20.8	17.4	17.2	13.3	23.4	23.3	19.9	19.3	14.6
	KW	1.85	1.85	1.83	1.84	1.82	1.85	1.85	1.84	1.85	1.82	1.85	1.84	1.84	1.86	1.81
95	T.C.	17.0	19.6	18.2	22.0	26.1	19.5	21.1	19.9	23.0	26.5	22.0	22.5	21.5	24.0	26.9
	S.C.	17.3	17.8	14.5	14.7	11.4	19.8	20.4	17.0	16.8	12.9	22.4	22.9	19.5	18.9	14.4
	KW	2.11	2.12	2.07	2.08	2.06	2.10	2.11	2.08	2.09	2.05	2.09	2.10	2.09	2.10	2.05
105	T.C.	16.2	18.8	17.8	21.7	25.4	18.6	20.1	19.1	22.4	25.6	21.1	21.4	20.4	23.1	25.8
	S.C.	16.4	17.1	14.1	14.2	11.2	18.9	19.3	16.4	16.4	12.6	21.4	21.5	18.7	18.5	14.0
	KW	2.51	2.57	2.48	2.41	2.37	2.44	2.49	2.46	2.40	2.37	2.38	2.41	2.45	2.39	2.37
115	T.C.	15.3	18.0	17.3	21.4	24.8	17.8	19.2	18.3	21.7	24.8	20.3	20.3	19.3	22.1	24.8
	S.C.	15.5	16.4	13.6	13.8	10.9	17.9	18.3	15.8	15.9	12.3	20.4	20.1	18.0	18.1	13.7
	KW	2.89	3.01	2.87	2.72	2.67	2.78	2.87	2.84	2.69	2.67	2.67	2.72	2.81	2.66	2.67
125	T.C.	14.4	17.2	16.9	21.1	24.2	16.9	18.2	17.6	21.1	24.0	19.4	19.2	18.3	21.2	23.7
	S.C.	14.6	15.8	13.2	13.3	10.7	17.0	17.3	15.2	15.5	12.0	19.4	18.8	17.2	17.7	13.3
	KW	3.28	3.46	3.27	3.04	2.98	3.12	3.24	3.22	2.99	2.98	2.95	3.03	3.17	2.94	2.98

NOTE: ALL CAPACITIES INCLUDE INDOOR FAN HEAT AT 1250 BTUH/1000 CFM.

Multipliers for determining the performance with other indoor sections.

NOTE: For dry bulb temperatures different than those listed (between 73-87 F), sensible capacity increases by 1060 BTUH per 1000 CFM per degree above the listed temperature and decreases by 1060 BTUH per 1000 CFM per degree below the listed temperature.

Air Handlers	Coils	T.C.	S.C.	KW
–	FC/MC/PC30	1.00	1.00	1.00
–	FC/MC/PC32	1.00	1.01	1.00
–	FC/MC/PC35	1.00	1.01	1.00
–	FC/MC/PC36	1.00	1.01	1.00
–	FC/MC/PC37	1.03	1.03	1.01
–	FC/MC/PC43	1.03	1.03	1.01
–	HC30	0.99	0.99	0.99
–	HC36	1.00	1.01	1.00
–	HC42	1.03	1.03	1.01
–	UC24	1.00	1.01	1.00
–	UC30	1.00	1.01	1.00
AHP24	–	1.00	1.00	1.00
AHX18	–	1.01	1.02	0.96
AHX24	–	1.03	1.03	0.89
AHX30	–	1.03	1.06	0.89

Air Handlers	Coils	T.C.	S.C.	KW
AHX36	–	1.05	1.08	0.94
AV*24	–	1.01	1.02	0.94
AV*36	–	1.03	1.02	0.93
F*FP030	–	1.00	0.99	1.00
F6FP024	–	1.02	1.04	0.97
F6FP030	–	1.02	1.04	0.99
F6FP036	–	1.03	1.07	0.97
MV12B	FC/MC24B	1.03	1.02	0.92
MV12B	FC/MC30B	1.03	1.02	0.92
MV12B	FC/MC35B	1.03	1.03	0.93
MV16C	FC/MC35C	1.03	1.03	0.93
MV12B	FC/MC36B	1.03	1.04	0.93
MV16C	FC/MC36C	1.03	1.04	0.93
MV12B	FC/MC43B	1.05	1.05	0.93
MV16C	FC/MC43C	1.05	1.05	0.92

Continued on next page.

Furnaces	Coils	T.C.	S.C.	KW
T*(8,L)X*A12	FC/MC/PC24A	1.02	1.03	0.95
T*(8,L)X*B12	FC/MC/PC24B	1.03	1.05	0.94
T*9X*B12	FC/MC/PC24B	1.02	1.03	0.95
T*(8,L)X*A12	FC/MC/PC30A	1.02	1.02	0.95
T*(8,L)X*B12	FC/MC/PC30B	1.03	1.05	0.94
T*9X*B12	FC/MC/PC30B	1.02	1.02	0.93
T*(8,L)X*A12	FC/MC/PC32A	1.03	1.05	0.94
T*(8,L)X*B12	FC/MC/PC35B	1.03	1.06	0.94
T*(8,L)X*C16	FC/MC/PC35C	0.99	0.95	0.93
T*(8,L)X*C20	FC/MC/PC35C	1.03	1.08	0.94
T*9X*B12	FC/MC/PC35B	1.03	1.05	0.95
T*9X*C16	FC/MC/PC35C	1.02	1.01	0.93
T*9X*C20	FC/MC/PC35C	1.03	1.05	0.94
T*(8,L)X*A12	FC/MC/PC36A	1.03	1.05	0.94
T*(8,L)X*B12	FC/MC/PC36B	1.03	1.06	0.95
T*(8,L)X*C16	FC/MC/PC36C	1.01	0.98	0.94
T*9X*B12	FC/MC/PC36B	1.03	1.05	0.94
T*9X*C16	FC/MC/PC36C	1.03	1.04	0.93
T*9X*C20	FC/MC/PC36C	1.03	1.05	0.94
T*(8,L)X*A12	FC/MC/PC37A	1.04	1.09	0.96
T*(8,L)X*B12	FC/MC/PC42B	1.05	1.10	0.96
T*(8,L)X*C16	FC/MC/PC42C	1.03	1.01	0.94
T*9X*B12	FC/MC/PC42B	1.03	1.06	0.95
T*9X*C16	FC/MC/PC42C	1.03	1.07	0.93
T*9X*C20	FC/MC/PC42C	1.03	1.05	0.94
T*(8,L)X*B12	FC/MC/PC43B	1.04	1.10	0.94
T*(8,L)X*C16	FC/MC/PC43C	1.00	0.96	0.94
T*9X*B12	FC/MC/PC43B	1.04	1.07	0.96
T*9X*C16	FC/MC/PC43C	1.03	1.02	0.94
T*9X*C20	FC/MC/PC43C	1.04	1.06	0.96
T*(8,L)X*C16	FC/MC/PC48C	1.03	1.00	0.94
T*9X*C16	FC/MC/PC48C	1.05	1.07	0.94
T*9X*C20	FC/MC/PC48C	1.05	1.08	0.96
T*(8,L)X*A12	HD36	1.00	1.01	0.94
T*(8,L)X*B12	HD36	1.00	1.01	0.94
T*(8,L)X*C16	HD36	1.00	1.01	0.94
T*9X*B12	HD36	1.00	1.01	0.94
T*(8,L)X*A12	UC24A	1.03	1.03	0.94
T*(8,L)X*B12	UC24B	1.03	1.05	0.94
T*9X*B12	UC24B	1.03	1.03	0.94
T*(8,L)X*A12	UC30A	1.03	1.03	0.94
T*(8,L)X*B12	UC30B	1.03	1.05	0.94
T*9X*B12	UC30B	1.03	1.03	0.94
T*(8,L)X*A12	UC36A	0.99	0.99	0.91
T*(8,L)X*B12	UC36B	1.00	1.03	0.92
T*(8,L)X*C16	UC36C	1.01	1.05	0.92
T*9X*B12	UC36B	0.99	0.99	0.91
T*9X*C16	UC36C	1.00	1.01	0.90
T*9X*C20	UC36C	0.99	1.00	0.91
T*(8,L)X*B12	UC42B	1.03	1.02	0.92
T*(8,L)X*C16	UC42C	1.03	1.02	0.94
T*9X*B12	UC42B	1.03	1.05	0.95
T*9X*C16	UC42C	1.03	1.05	0.93
T*9X*C20	UC42C	1.02	1.02	0.95
T*(8,L)X*C16	UC48C	1.02	1.00	0.93
T*9X*C16	UC48C	1.03	1.05	0.92
T*9X*C20	UC48C	1.04	1.07	0.96
(Y*(8,L)C/T*8V)*A12	FC/MC/PC24A	1.03	1.03	0.93
(Y*(8,L)C/T*8V)*B12	FC/MC/PC24B	1.03	1.04	0.92

Furnaces	Coils	T.C.	S.C.	KW
Y*9C*B12	FC/MC/PC24B	1.02	1.02	0.92
(Y*(8,L)C/T*8V)*A12	FC/MC/PC30A	1.03	1.02	0.93
(Y*(8,L)C/T*8V)*B12	FC/MC/PC30B	1.03	1.03	0.92
Y*9C*B12	FC/MC/PC30B	1.03	1.02	0.93
(Y*(8,L)C/T*8V)*A12	FC/MC/PC32A	1.03	1.04	0.94
(Y*(8,L)C/T*8V)*B12	FC/MC/PC35B	1.03	1.02	0.93
Y*9C*B12	FC/MC/PC35B	1.03	1.05	0.94
(Y*(8,L)C/T*8V)*C16	FC/MC/PC35C	1.04	1.08	0.92
(Y*(8,L)C/T*8V)*C20	FC/MC/PC35C	1.03	1.02	0.90
Y*9C*C16	FC/MC/PC35C	1.05	1.10	0.94
Y*9C*C20	FC/MC/PC35C	1.03	1.02	0.91
(Y*(8,L)C/T*8V)*A12	FC/MC/PC36A	1.03	1.04	0.93
(Y*(8,L)C/T*8V)*B12	FC/MC/PC36B	1.03	1.04	0.92
Y*9C*B12	FC/MC/PC36B	1.03	1.04	0.93
(Y*(8,L)C/T*8V)*C16	FC/MC/PC36C	1.04	1.08	0.92
(Y*(8,L)C/T*8V)*C20	FC/MC/PC36C	1.03	1.02	0.90
Y*9C*C16	FC/MC/PC36C	1.03	1.04	0.92
Y*9C*C20	FC/MC/PC36C	1.03	1.02	0.91
(Y*(8,L)C/T*8V)*A12	FC/MC/PC37A	1.04	1.05	0.94
(Y*(8,L)C/T*8V)*B12	FC/MC/PC43B	1.04	1.04	0.92
Y*9C*B12	FC/MC/PC43B	1.04	1.06	0.93
(Y*(8,L)C/T*8V)*C16	FC/MC/PC43C	1.06	1.13	0.93
(Y*(8,L)C/T*8V)*C20	FC/MC/PC43C	1.04	1.04	0.90
Y*9C*C16	FC/MC/PC43C	1.05	1.07	0.93
Y*9C*C20	FC/MC/PC43C	1.06	1.12	0.93
(Y*(8,L)C/T*8V)*C16	FC/MC/PC48C	1.06	1.10	0.91
Y*9C*C16	FC/MC/PC48C	1.07	1.14	0.93
(Y*(8,L)C/T*8V)*A12	HC18	0.99	0.98	0.94
(Y*(8,L)C/T*8V)*A12	HC30	1.02	1.02	0.93
(Y*(8,L)C/T*8V)*B12	HC36	1.03	1.02	0.93
Y*9C*B12	HC36	1.03	1.05	0.94
(Y*(8,L)C/T*8V)*C16	HC42	1.06	1.13	0.93
(Y*(8,L)C/T*8V)*C20	HC42	1.04	1.04	0.90
Y*9C*C16	HC42	1.05	1.07	0.93
Y*9C*C20	HC42	1.06	1.13	0.93
(Y*(8,L)C/T*8V)*A12	HD24	1.04	1.05	0.93
(Y*(8,L)C/T*8V)*B12	HD24	1.04	1.05	0.92
Y*9C*B12	HD24	1.04	1.05	0.93
(Y*(8,L)C/T*8V)*A12	HD36	1.02	1.00	0.92
(Y*(8,L)C/T*8V)*B12	HD36	1.02	0.98	0.92
(Y*(8,L)C/T*8V)*C16	HD36	1.03	1.04	0.92
(Y*(8,L)C/T*8V)*C20	HD36	1.02	0.98	0.90
Y*9C*B12	HD36	1.02	1.00	0.92
Y*9C*C16	HD36	1.03	1.00	0.91
Y*9C*C20	HD36	1.02	0.99	0.91
(Y*(8,L)C/T*8V)*A12	UC24A	1.03	1.04	0.93
(Y*(8,L)C/T*8V)*B12	UC24B	1.03	1.04	0.92
Y*9C*B12	UC24B	1.03	1.04	0.94
(Y*(8,L)C/T*8V)*A12	UC30A	1.03	1.04	0.93
(Y*(8,L)C/T*8V)*B12	UC30B	1.03	1.04	0.92
Y*9C*B12	UC30B	1.03	1.04	0.94
(Y*(8,L)C/T*8V)*A12	UC36A	0.99	0.99	0.92
(Y*(8,L)C/T*8V)*B12	UC36B	1.00	1.00	0.91
Y*9C*B12	UC36B	0.99	0.99	0.91
(Y*(8,L)C/T*8V)*C16	UC36C	1.01	1.04	0.92
(Y*(8,L)C/T*8V)*C20	UC36C	0.99	0.98	0.90
Y*9C*C16	UC36C	1.00	1.00	0.91
Y*9C*C20	UC36C	0.99	0.98	0.90
(Y*(8,L)C/T*8V)*C16	UC48C	1.02	1.03	0.91
Y*9C*C16	UC48C	1.03	1.07	0.93

COOLING PERFORMANCE DATA

AIR CONDITIONER MODEL NO.		TCHD30S41S3														
INDOOR COIL MODEL NO.		FC/MC/PC35														
CONDENSING ENTERING AIR TEMPERATURE	IDCFM	800					1000					1200				
	ID DB (°F)	80	80	75	80	80	80	80	75	80	80	80	80	75	80	80
	ID WB (°F)	57	62	62	67	72	57	62	62	67	72	57	62	62	67	72
65	T.C.	27.3	28.7	28.9	30.5	31.8	28.8	29.9	29.8	31.6	33.4	30.3	31.0	30.7	32.8	35.0
	S.C.	26.6	24.5	20.7	20.5	15.9	28.2	27.4	23.2	22.6	17.2	29.7	30.4	25.7	24.7	18.5
	KW	1.61	1.64	1.61	1.64	1.63	1.63	1.63	1.61	1.64	1.64	1.65	1.62	1.61	1.64	1.65
75	T.C.	26.2	27.0	27.1	29.4	31.2	27.8	28.3	28.3	30.4	32.2	29.5	29.5	29.5	31.5	33.2
	S.C.	25.6	23.9	19.9	19.8	15.4	27.2	26.4	22.3	22.0	16.8	28.8	28.9	24.6	24.1	18.1
	KW	1.88	1.88	1.89	1.88	1.86	1.87	1.87	1.88	1.87	1.86	1.87	1.87	1.88	1.87	1.86
85	T.C.	25.1	25.3	25.2	28.3	30.6	26.8	26.7	26.7	29.2	31.0	28.6	28.0	28.3	30.1	31.4
	S.C.	24.5	23.2	19.1	19.2	15.0	26.2	25.3	21.3	21.3	16.3	28.0	27.4	23.6	23.5	17.7
	KW	2.15	2.12	2.18	2.11	2.09	2.12	2.12	2.16	2.10	2.09	2.09	2.12	2.14	2.10	2.08
95	T.C.	23.9	23.7	23.3	27.2	30.0	25.8	25.1	25.2	28.0	29.8	27.8	26.5	27.1	28.8	29.6
	S.C.	23.5	22.6	18.2	18.5	14.5	25.3	24.3	20.4	20.7	15.9	27.1	25.9	22.5	22.9	17.3
	KW	2.41	2.36	2.46	2.34	2.32	2.37	2.36	2.43	2.33	2.31	2.32	2.36	2.41	2.32	2.30
105	T.C.	22.4	22.6	22.2	25.0	27.8	24.3	24.1	23.8	26.1	27.8	26.2	25.6	25.3	27.3	27.9
	S.C.	21.9	21.5	17.6	17.8	13.9	23.7	23.1	19.7	20.0	15.3	25.5	24.8	21.7	22.2	16.7
	KW	2.93	2.96	3.05	2.84	2.70	2.85	2.88	3.01	2.80	2.69	2.76	2.80	2.97	2.76	2.67
115	T.C.	20.9	21.5	21.2	22.9	25.6	22.8	23.1	22.4	24.4	26.0	24.7	24.7	23.5	25.8	26.3
	S.C.	20.5	20.4	17.0	17.1	13.4	22.2	22.0	19.0	19.3	14.7	24.0	23.6	20.9	21.5	16.1
	KW	3.44	3.54	3.61	3.32	3.07	3.31	3.38	3.56	3.25	3.05	3.19	3.22	3.51	3.18	3.03
125	T.C.	19.5	20.4	20.1	20.7	23.4	21.3	22.1	20.9	22.6	24.1	23.2	23.9	21.8	24.4	24.7
	S.C.	19.0	19.3	16.4	16.4	12.8	20.7	20.9	18.3	18.6	14.2	22.4	22.5	20.1	20.8	15.5
	KW	3.94	4.13	4.18	3.81	3.44	3.78	3.88	4.12	3.70	3.42	3.62	3.63	4.06	3.60	3.39

NOTE: ALL CAPACITIES INCLUDE INDOOR FAN HEAT AT 1250 BTUH/1000 CFM.

Multipliers for determining the performance with other indoor sections.

NOTE: For dry bulb temperatures different than those listed (between 73-87 F), sensible capacity increases by 1060 BTUH per 1000 CFM per degree above the listed temperature and decreases by 1060 BTUH per 1000 CFM per degree below the listed temperature.

Air Handlers	Coils	T.C.	S.C.	KW
–	FC/MC/PC30	0.99	0.98	1.00
–	FC/MC/PC32	1.00	1.00	1.00
–	FC/MC/PC36	1.00	0.99	1.00
–	FC/MC/PC37	1.01	1.02	1.00
–	FC/MC/PC43	1.01	1.02	1.00
–	HC30	0.99	0.98	1.00
–	HC36	1.00	1.00	1.00
–	HC42	1.01	1.02	1.00
–	HD36	0.99	0.96	1.00
–	UC30	0.99	0.98	0.99
–	UC48	0.96	0.96	1.00
AHP36	–	1.01	1.02	1.00
AHX30	–	1.01	1.03	0.97
AHX36	–	1.04	1.04	0.94
AHX42	–	1.05	1.06	0.92
AHX48	–	1.06	1.11	0.93

Air Handlers	Coils	T.C.	S.C.	KW
AV*36	–	1.03	1.03	0.93
F*FP030	–	0.99	0.96	1.00
F*FP036	–	0.99	0.99	0.99
F*FP040	–	0.99	0.98	0.99
F6FP030	–	1.01	1.01	1.01
F6FP036	–	1.01	1.00	0.95
F6FP042	–	1.06	1.08	0.94
F6FP048	–	1.00	1.02	0.96
MV12B	FC/MC30B	1.01	1.00	0.93
MV12B	FC/MC35B	1.02	1.02	0.93
MV16C	FC/MC35C	1.02	1.02	0.93
MV12B	FC/MC36B	1.02	1.01	0.93
MV16C	FC/MC36C	1.02	1.01	0.93
MV12B	FC/MC43B	1.04	1.04	0.93
MV16C	FC/MC43C	1.04	1.04	0.92
MV16C	FC/MC48C	1.05	1.05	0.92

Continued on next page.

Furnaces	Coils	T.C.	S.C.	KW
T*(8,L)X*A12	FC/MC/PC30A	1.01	1.02	0.97
T*(8,L)X*B12	FC/MC/PC30B	0.99	0.98	0.93
T*9X*B12	FC/MC/PC30B	1.01	1.02	0.97
T*(8,L)X*A12	FC/MC/PC32A	1.00	1.00	0.98
T*(8,L)X*B12	FC/MC/PC35B	1.01	1.04	0.95
T*(8,L)X*C16	FC/MC/PC35C	1.01	1.04	0.94
T*(8,L)X*C20	FC/MC/PC35C	0.99	0.97	0.92
T*9X*B12	FC/MC/PC35B	1.01	1.03	0.95
T*9X*C16	FC/MC/PC35C	1.01	1.04	0.94
T*(8,L)X*A12	FC/MC/PC36A	1.01	1.00	0.99
T*(8,L)X*B12	FC/MC/PC36B	1.01	1.04	0.97
T*(8,L)X*C16	FC/MC/PC36C	1.01	1.02	0.94
T*(8,L)X*C20	FC/MC/PC36C	1.00	0.98	0.92
T*9X*B12	FC/MC/PC36B	1.01	1.03	0.97
T*9X*C16	FC/MC/PC36C	1.01	1.03	0.95
T*(8,L)X*A12	FC/MC/PC37A	1.03	1.07	0.95
T*(8,L)X*B12	FC/MC/PC42B	0.99	1.01	0.97
T*(8,L)X*C20	FC/MC/PC42C	0.96	0.96	0.93
T*9X*B12	FC/MC/PC42B	0.99	1.01	0.97
T*9X*C16	FC/MC/PC42C	0.99	0.98	0.97
T*(8,L)X*B12	FC/MC/PC43B	1.03	1.04	1.01
T*(8,L)X*C20	FC/MC/PC43C	0.94	1.03	0.91
T*9X*B12	FC/MC/PC43B	1.03	1.04	1.01
T*9X*C16	FC/MC/PC43C	1.03	1.02	1.01
T*(8,L)X*C20	FC/MC/PC48C	1.03	1.01	0.91
T*9X*C16	FC/MC/PC48C	1.05	1.09	0.95
T*(8,L)X*A12	HD36	1.00	1.01	0.96
T*(8,L)X*B12	HD36	1.00	1.01	0.96
T*(8,L)X*C16	HD36	1.01	1.02	0.95
T*9X*B12	HD36	1.00	1.01	0.96
T*(8,L)X*A12	UC30A	1.01	1.03	0.97
T*(8,L)X*B12	UC30B	1.00	0.99	0.94
T*9X*B12	UC30B	1.01	1.03	0.97
T*(8,L)X*A12	UC36A	0.96	0.94	0.98
T*(8,L)X*B12	UC36B	1.01	1.03	0.97
T*(8,L)X*C16	UC36C	1.01	1.03	0.95
T*(8,L)X*C20	UC36C	0.95	0.93	0.93
T*9X*B12	UC36B	1.01	1.03	0.97
T*9X*C16	UC36C	1.01	1.03	0.95
T*(8,L)X*B12	UC42B	0.97	0.98	0.97
T*(8,L)X*C16	UC42C	0.93	0.88	0.91
T*(8,L)X*C20	UC42C	0.96	0.94	0.93
T*9X*B12	UC42B	0.97	0.98	0.97
T*9X*C16	UC42C	0.98	0.98	0.96
T*(8,L)X*C16	UC48C	0.94	0.91	0.91
T*(8,L)X*C20	UC48C	0.98	0.97	0.92
T*9X*C16	UC48C	0.99	1.00	0.97

Furnaces	Coils	T.C.	S.C.	KW
(Y*(8,L)C/T*8V)*A12	FC/MC/PC30A	1.01	1.03	0.97
(Y*(8,L)C/T*8V)*B12	FC/MC/PC30B	1.01	1.01	0.92
Y*9C*B12	FC/MC/PC30B	1.01	1.02	0.95
(Y*(8,L)C/T*8V)*A12	FC/MC/PC32A	1.00	1.01	0.99
(Y*(8,L)C/T*8V)*B12	FC/MC/PC35B	1.01	1.02	0.94
Y*9C*B12	FC/MC/PC35B	1.01	1.04	0.97
(Y*(8,L)C/T*8V)*C16	FC/MC/PC35C	1.01	1.03	0.93
(Y*(8,L)C/T*8V)*C20	FC/MC/PC35C	1.03	1.07	0.94
Y*9C*C16	FC/MC/PC35C	1.01	1.03	0.93
Y*9C*C20	FC/MC/PC35C	1.01	1.03	0.93
(Y*(8,L)C/T*8V)*A12	FC/MC/PC36A	1.01	1.01	0.95
(Y*(8,L)C/T*8V)*B12	FC/MC/PC36B	1.01	1.01	0.93
Y*9C*B12	FC/MC/PC36B	1.01	1.01	0.94
(Y*(8,L)C/T*8V)*C16	FC/MC/PC36C	1.01	1.02	0.93
(Y*(8,L)C/T*8V)*C20	FC/MC/PC36C	1.03	1.05	0.92
Y*9C*C16	FC/MC/PC36C	1.01	1.02	0.92
Y*9C*C20	FC/MC/PC36C	1.01	1.01	0.93
(Y*(8,L)C/T*8V)*A12	FC/MC/PC37A	1.03	1.04	0.96
(Y*(8,L)C/T*8V)*B12	FC/MC/PC43B	1.03	1.05	0.94
Y*9C*B12	FC/MC/PC43B	1.03	1.04	0.96
(Y*(8,L)C/T*8V)*C16	FC/MC/PC43C	1.04	1.05	0.91
(Y*(8,L)C/T*8V)*C20	FC/MC/PC43C	1.04	1.05	0.91
Y*9C*C16	FC/MC/PC43C	1.03	1.04	0.94
Y*9C*C20	FC/MC/PC43C	1.04	1.05	0.92
(Y*(8,L)C/T*8V)*A12	HC30	0.99	0.99	0.99
(Y*(8,L)C/T*8V)*B12	HC36	1.01	1.02	0.94
Y*9C*B12	HC36	1.01	1.04	0.97
(Y*(8,L)C/T*8V)*C16	HC42	1.04	1.05	0.91
(Y*(8,L)C/T*8V)*C20	HC42	1.04	1.05	0.91
Y*9C*C16	HC42	1.03	1.05	0.94
Y*9C*C20	HC42	1.04	1.05	0.92
(Y*(8,L)C/T*8V)*A12	HD36	1.00	0.97	0.95
(Y*(8,L)C/T*8V)*B12	HD36	1.00	0.98	0.92
(Y*(8,L)C/T*8V)*C16	HD36	1.01	0.98	0.93
(Y*(8,L)C/T*8V)*C20	HD36	1.01	1.01	0.92
Y*9C*B12	HD36	1.00	0.98	0.93
Y*9C*C16	HD36	1.01	0.98	0.93
Y*9C*C20	HD36	1.00	0.98	0.92
(Y*(8,L)C/T*8V)*A12	UC30A	1.01	1.04	0.97
(Y*(8,L)C/T*8V)*B12	UC30B	1.01	1.01	0.92
Y*9C*B12	UC30B	1.01	1.00	0.95
(Y*(8,L)C/T*8V)*A12	UC36A	1.01	1.00	0.95
(Y*(8,L)C/T*8V)*B12	UC36B	1.01	1.01	0.93
Y*9C*B12	UC36B	1.01	1.01	0.93
(Y*(8,L)C/T*8V)*C16	UC36C	1.01	1.01	0.93
(Y*(8,L)C/T*8V)*C20	UC36C	0.99	1.01	0.92
Y*9C*C16	UC36C	1.01	1.01	0.93
Y*9C*C20	UC36C	1.01	1.01	0.93

COOLING PERFORMANCE DATA

AIR CONDITIONER MODEL NO.		TCHD36S41S3														
INDOOR COIL MODEL NO.		FC/MC/PC43														
CONDENSING ENTERING AIR TEMPERATURE	IDCFM	1000					1200					1400				
	ID DB (°F)	80	80	75	80	80	80	80	75	80	80	80	80	75	80	80
	ID WB (°F)	57	62	62	67	72	57	62	62	67	72	57	62	62	67	72
65	T.C.	35.8	36.0	34.9	37.9	37.9	37.1	38.0	36.9	40.5	42.4	38.3	40.0	38.9	43.1	47.0
	S.C.	33.1	30.4	25.3	25.4	17.9	34.8	33.2	28.1	27.9	20.4	36.4	35.9	31.0	30.3	22.8
	KW	1.91	1.92	1.90	1.93	1.95	1.91	1.93	1.90	1.93	1.96	1.92	1.94	1.90	1.93	1.96
75	T.C.	34.4	34.5	32.9	35.6	35.9	35.7	36.5	34.8	38.3	40.5	36.9	38.5	36.7	41.1	45.2
	S.C.	31.6	29.4	24.4	24.3	17.3	33.4	32.2	27.2	26.8	19.8	35.1	34.9	29.9	29.4	22.3
	KW	2.32	2.30	2.30	2.25	2.25	2.30	2.29	2.28	2.25	2.25	2.28	2.28	2.26	2.25	2.25
85	T.C.	33.0	33.0	30.9	33.2	33.9	34.3	35.0	32.7	36.2	38.6	35.5	37.0	34.6	39.1	43.4
	S.C.	30.2	28.4	23.5	23.1	16.6	32.0	31.2	26.2	25.8	19.2	33.8	34.0	28.9	28.6	21.7
	KW	2.73	2.67	2.70	2.57	2.55	2.68	2.64	2.66	2.57	2.55	2.63	2.61	2.61	2.57	2.55
95	T.C.	31.6	31.5	28.9	30.8	31.8	32.8	33.5	30.7	34.0	36.7	34.1	35.5	32.4	37.2	41.7
	S.C.	28.8	27.3	22.6	21.9	15.9	30.6	30.2	25.2	24.8	18.5	32.4	33.0	27.8	27.8	21.1
	KW	3.14	3.05	3.10	2.90	2.85	3.06	3.00	3.03	2.89	2.85	2.99	2.95	2.97	2.89	2.85
105	T.C.	30.1	29.6	27.3	29.1	29.9	31.2	31.3	28.9	32.1	34.5	32.3	33.1	30.4	35.1	39.0
	S.C.	27.4	26.7	22.0	21.3	15.3	29.1	29.0	24.6	24.2	17.8	30.7	31.3	27.1	27.0	20.2
	KW	3.68	3.60	3.72	3.43	3.34	3.59	3.52	3.62	3.42	3.33	3.50	3.45	3.52	3.40	3.32
115	T.C.	28.6	27.7	25.8	27.5	28.0	29.6	29.2	27.1	30.3	32.2	30.6	30.7	28.4	33.1	36.5
	S.C.	26.1	26.1	21.5	20.7	14.7	27.6	27.9	24.0	23.5	17.0	29.1	29.6	26.4	26.3	19.3
	KW	4.20	4.14	4.32	3.94	3.82	4.10	4.04	4.19	3.92	3.80	4.00	3.93	4.06	3.90	3.78
125	T.C.	27.1	25.9	24.3	25.9	26.1	28.0	27.1	25.4	28.5	30.0	28.9	28.4	26.4	31.0	34.0
	S.C.	24.8	25.5	21.0	20.1	14.1	26.1	26.7	23.4	22.9	16.3	27.4	28.0	25.7	25.6	18.5
	KW	4.73	4.67	4.93	4.46	4.29	4.61	4.55	4.76	4.43	4.27	4.49	4.42	4.59	4.40	4.24

NOTE: ALL CAPACITIES INCLUDE INDOOR FAN HEAT AT 1250 BTUH/1000 CFM.

Multipliers for determining the performance with other indoor sections.

NOTE: For dry bulb temperatures different than those listed (between 73-87 F), sensible capacity increases by 1060 BTUH per 1000 CFM per degree above the listed temperature and decreases by 1060 BTUH per 1000 CFM per degree below the listed temperature.

Air Handlers	Coils	T.C.	S.C.	KW
–	FC/MC/PC32	0.98	0.98	1.00
–	FC/MC/PC35	0.98	0.98	1.00
–	FC/MC/PC36	0.97	0.97	1.00
–	FC/MC/PC37	0.99	1.00	1.00
–	FC/MC/PC48	1.01	1.02	0.99
–	HC36	0.98	0.98	1.00
–	HC42	0.99	1.01	1.00
–	HD36	0.95	0.94	1.00
–	HD48	1.01	1.00	1.00
AHP36	–	1.01	1.01	0.97
AHX36	–	1.01	1.03	0.95
AHX42	–	1.03	1.04	0.95
AHX48	–	1.04	1.06	0.95
AHX60	–	1.05	1.08	0.96
AV*36	–	1.01	1.02	0.97
AV/SV*48	–	1.02	1.03	0.94
F*FP036	–	0.97	0.96	1.00

Air Handlers	Coils	T.C.	S.C.	KW
F*FP040	–	0.97	0.97	1.00
F*FP042	–	0.97	0.97	1.00
F*FV060	–	0.98	0.96	0.92
F5FP048	–	1.03	1.04	0.93
F6FP036	–	0.98	0.98	0.98
F6FP042	–	1.04	1.07	0.97
F6FP048	–	0.95	0.94	0.95
F6FP060	–	1.04	1.06	0.95
MV12B	FC/MC35B	0.99	0.99	0.95
MV16C	FC/MC35C	0.99	1.00	0.93
MV12B	FC/MC36B	0.99	0.98	0.96
MV16C	FC/MC36C	0.99	0.98	0.93
MV12B	FC/MC43B	1.01	1.02	0.95
MV16C	FC/MC43C	1.02	1.02	0.92
MV16C	FC/MC48C	1.03	1.03	0.92
MV12D	FC/MC48D	1.02	1.02	0.92

Continued on next page.

Furnaces	Coils	T.C.	S.C.	KW
T*(8,L)X*A12	FC/MC/PC32A	0.96	0.95	0.98
T*(8,L)X*B12	FC/MC/PC35B	0.98	1.00	0.98
T*(8,L)X*C16	FC/MC/PC35C	0.99	0.98	0.95
T*(8,L)X*C20	FC/MC/PC35C	0.99	1.00	0.95
T*9X*B12	FC/MC/PC35B	0.98	1.00	0.98
T*9X*C16	FC/MC/PC35C	0.99	1.01	0.97
T*9X*C20	FC/MC/PC35C	0.99	0.98	0.97
T*(8,L)X*A12	FC/MC/PC36A	0.97	0.97	0.99
T*(8,L)X*B12	FC/MC/PC36B	0.98	0.99	0.98
T*(8,L)X*C16	FC/MC/PC36C	0.98	0.95	0.96
T*(8,L)X*C20	FC/MC/PC36C	0.99	1.00	0.95
T*9X*B12	FC/MC/PC36B	0.98	0.99	1.00
T*9X*C16	FC/MC/PC36C	0.99	1.01	0.97
T*9X*C20	FC/MC/PC36C	0.98	0.98	0.96
T*(8,L)X*A12	FC/MC/PC37A	0.97	1.00	0.95
T*(8,L)X*B12	FC/MC/PC42B	0.95	0.95	0.95
T*(8,L)X*C16	FC/MC/PC42C	0.96	0.95	0.94
T*(8,L)X*C20	FC/MC/PC42C	0.97	0.98	0.95
T*9X*B12	FC/MC/PC42B	0.96	0.97	0.99
T*9X*C16	FC/MC/PC42C	0.96	0.97	0.99
T*9X*C20	FC/MC/PC42C	0.95	0.95	0.97
T*(8,L)X*B12	FC/MC/PC43B	1.01	1.04	0.98
T*(8,L)X*C16	FC/MC/PC43C	1.01	1.02	0.95
T*(8,L)X*C20	FC/MC/PC43C	1.02	1.05	0.96
T*9X*B12	FC/MC/PC43B	1.01	1.04	0.98
T*9X*C16	FC/MC/PC43C	1.01	1.05	0.96
T*9X*C20	FC/MC/PC43C	1.01	1.02	0.96
T*(8,L)X*C16	FC/MC/PC48C	1.02	1.04	0.94
T*(8,L)X*C20	FC/MC/PC48C	1.04	1.07	0.95
T*9X*C16	FC/MC/PC48C	1.03	1.06	0.97
T*9X*C20	FC/MC/PC48C	1.02	1.03	0.96
T*9X*D20	FC/MC/PC48D	1.02	1.03	0.96
T*(8,L)X*A12	HD36	0.98	0.98	0.98
T*(8,L)X*B12	HD36	0.98	0.98	0.98
T*9X*B12	HD36	0.98	0.98	0.98
T*(8,L)X*C16	HD48	1.01	1.00	0.95
T*(8,L)X*C20	HD48	1.02	1.05	0.94
T*9X*C20	HD48	1.02	1.05	0.94
T*9X*D20	HD48	1.02	1.06	0.94
T*(8,L)X*B12	UC36B	0.94	0.94	1.01
T*(8,L)X*C16	UC36C	0.95	0.95	0.95
T*(8,L)X*C20	UC36C	0.96	0.99	0.96
T*9X*B12	UC36B	0.94	0.94	1.00
T*9X*C16	UC36C	0.94	0.94	0.98
T*9X*C20	UC36C	0.95	0.95	0.97
T*(8,L)X*B12	UC42B	0.95	0.94	1.00
T*(8,L)X*C16	UC42C	0.95	0.93	0.95
T*(8,L)X*C20	UC42C	0.96	0.95	0.96
T*9X*B12	UC42B	0.95	0.95	1.00
T*9X*C16	UC42C	0.95	0.95	0.97
T*9X*C20	UC42C	0.96	0.95	0.98
T*(8,L)X*C16	UC48C	0.96	0.96	0.94
T*(8,L)X*C20	UC48C	0.98	0.99	0.96
T*9X*C16	UC48C	0.97	0.98	0.97
T*9X*C20	UC48C	0.96	0.95	0.96
T*9X*D20	UC48D	0.96	0.95	0.96
(Y*(8,L)C/T*8V)*A12	FC/MC/PC32A	0.96	0.93	0.96

Furnaces	Coils	T.C.	S.C.	KW
(Y*(8,L)C/T*8V)*B12	FC/MC/PC35B	0.98	0.99	0.98
Y*9C*B12	FC/MC/PC35B	0.98	0.99	0.97
(Y*(8,L)C/T*8V)*C16	FC/MC/PC35C	0.99	1.00	0.94
(Y*(8,L)C/T*8V)*C20	FC/MC/PC35C	0.99	1.00	0.93
Y*9C*C16	FC/MC/PC35C	0.99	1.00	0.96
Y*9C*C20	FC/MC/PC35C	1.01	1.02	0.98
(Y*(8,L)C/T*8V)*A12	FC/MC/PC36A	0.98	0.98	0.98
(Y*(8,L)C/T*8V)*B12	FC/MC/PC36B	0.98	0.98	0.96
Y*9C*B12	FC/MC/PC36B	0.98	0.98	0.96
(Y*(8,L)C/T*8V)*C16	FC/MC/PC36C	0.98	0.98	0.94
(Y*(8,L)C/T*8V)*C20	FC/MC/PC36C	0.99	0.98	0.94
Y*9C*C16	FC/MC/PC36C	0.99	0.98	0.94
Y*9C*C20	FC/MC/PC36C	1.00	1.02	0.97
(Y*(8,L)C/T*8V)*A12	FC/MC/PC37A	0.97	0.93	0.94
(Y*(8,L)C/T*8V)*B12	FC/MC/PC43B	1.01	1.02	0.98
Y*9C*B12	FC/MC/PC43B	1.01	1.02	0.98
(Y*(8,L)C/T*8V)*C16	FC/MC/PC43C	1.01	1.02	0.94
(Y*(8,L)C/T*8V)*C20	FC/MC/PC43C	1.02	1.02	0.93
Y*9C*C16	FC/MC/PC43C	1.01	1.02	0.96
Y*9C*C20	FC/MC/PC43C	1.01	1.02	0.94
(Y*(8,L)C/T*8V)*C16	FC/MC/PC48C	1.03	1.05	0.93
(Y*(8,L)C/T*8V)*C20	FC/MC/PC48C	1.04	1.05	0.92
Y*9C*C16	FC/MC/PC48C	1.03	1.04	0.94
Y*9C*C20	FC/MC/PC48C	1.04	1.08	0.97
Y*9C*D20	FC/MC/PC48D	1.04	1.06	0.94
(Y*(8,L)C/T*8V)*B12	HC36	0.98	0.98	0.98
Y*9C*B12	HC36	0.98	0.97	0.98
(Y*(8,L)C/T*8V)*C16	HC42	1.02	1.02	0.94
(Y*(8,L)C/T*8V)*C20	HC42	1.02	1.03	0.92
Y*9C*C16	HC42	1.01	1.02	0.97
Y*9C*C20	HC42	1.02	1.02	0.95
Y*9C*D20	HC60	0.99	1.00	0.93
(Y*(8,L)C/T*8V)*A12	HD36	0.98	0.94	0.98
(Y*(8,L)C/T*8V)*B12	HD36	0.98	0.95	0.96
(Y*(8,L)C/T*8V)*C16	HD36	0.98	0.95	0.94
(Y*(8,L)C/T*8V)*C20	HD36	0.99	0.95	0.94
Y*9C*B12	HD36	0.98	0.95	0.96
Y*9C*C16	HD36	0.98	0.95	0.93
Y*9C*C20	HD36	0.99	0.99	0.97
(Y*(8,L)C/T*8V)*B12	HD48	1.02	1.02	0.96
(Y*(8,L)C/T*8V)*C16	HD48	1.02	1.02	0.93
(Y*(8,L)C/T*8V)*C20	HD48	1.02	1.02	0.92
Y*9C*B12	HD48	1.01	1.02	0.96
Y*9C*C16	HD48	1.02	1.02	0.94
Y*9C*C20	HD48	1.02	1.06	0.97
Y*9C*D20	HD48	1.02	1.03	0.94
(Y*(8,L)C/T*8V)*B12	UC36B	0.95	0.94	0.96
Y*9C*B12	UC36B	0.96	0.94	0.96
(Y*(8,L)C/T*8V)*C16	UC36C	0.96	0.94	0.94
(Y*(8,L)C/T*8V)*C20	UC36C	0.96	0.94	0.94
Y*9C*C16	UC36C	0.96	0.94	0.93
Y*9C*C20	UC36C	0.97	0.99	0.97
(Y*(8,L)C/T*8V)*C16	UC48C	0.99	1.00	0.93
(Y*(8,L)C/T*8V)*C20	UC48C	0.99	1.00	0.92
Y*9C*C16	UC48C	0.98	0.99	0.94
Y*9C*C20	UC48C	0.99	1.02	0.97
Y*9C*D20	UC48D	0.98	0.99	0.94

COOLING PERFORMANCE DATA

AIR CONDITIONER MODEL NO.		TCHD48S41S3														
INDOOR COIL MODEL NO.		FC/MC/PC48														
CONDENSING ENTERING AIR TEMPERATURE	IDCFM	1400					1600					1800				
	ID DB (°F)	80	80	75	80	80	80	80	75	80	80	80	80	75	80	80
	ID WB (°F)	57	62	62	67	72	57	62	62	67	72	57	62	62	67	72
65	T.C.	44.8	47.3	47.9	52.2	56.8	46.3	48.2	48.8	53.2	58.1	47.8	49.1	49.7	54.3	59.4
	S.C.	45.5	40.3	34.7	34.4	26.8	47.1	42.9	36.8	36.7	28.0	48.6	45.5	38.9	39.0	29.2
	KW	2.74	2.71	2.74	2.72	2.73	2.73	2.72	2.74	2.72	2.74	2.73	2.72	2.74	2.72	2.75
75	T.C.	43.4	45.6	46.0	50.2	54.7	44.8	46.5	46.8	51.2	55.9	46.2	47.4	47.7	52.1	57.2
	S.C.	44.1	40.1	34.1	33.6	26.0	45.5	42.7	36.3	35.7	27.1	46.9	45.3	38.5	37.9	28.3
	KW	3.21	3.19	3.21	3.18	3.17	3.20	3.19	3.20	3.17	3.18	3.18	3.18	3.19	3.17	3.18
85	T.C.	42.0	44.0	44.1	48.2	52.5	43.3	44.9	44.9	49.1	53.7	44.6	45.8	45.7	49.9	54.9
	S.C.	42.6	40.0	33.6	32.8	25.2	44.0	42.5	35.9	34.8	26.3	45.3	45.1	38.2	36.8	27.4
	KW	3.69	3.68	3.68	3.64	3.61	3.66	3.65	3.66	3.63	3.61	3.63	3.63	3.64	3.62	3.61
95	T.C.	40.5	42.4	42.2	46.2	50.3	41.8	43.3	42.9	47.0	51.5	43.0	44.1	43.6	47.8	52.7
	S.C.	41.1	39.8	33.1	32.0	24.4	42.4	42.4	35.5	33.8	25.5	43.7	44.9	37.9	35.7	26.6
	KW	4.17	4.16	4.15	4.10	4.05	4.13	4.12	4.12	4.09	4.05	4.08	4.09	4.09	4.07	4.04
105	T.C.	37.9	38.7	37.3	43.4	47.6	39.2	40.2	38.6	44.1	48.7	40.5	41.6	39.9	44.9	49.8
	S.C.	38.5	37.2	31.1	30.8	23.4	39.8	39.7	33.6	32.8	24.6	41.1	42.3	36.1	34.7	25.7
	KW	5.42	5.57	5.70	4.94	4.79	5.16	5.24	5.52	4.90	4.78	4.90	4.91	5.34	4.86	4.77
115	T.C.	35.4	35.2	32.6	40.6	44.9	36.7	37.2	34.4	41.3	45.9	38.1	39.1	36.3	42.1	46.9
	S.C.	35.9	34.6	29.2	29.7	22.6	37.3	37.2	31.8	31.7	23.8	38.6	39.7	34.4	33.6	24.9
	KW	6.63	6.93	7.21	5.75	5.50	6.16	6.32	6.88	5.69	5.49	5.69	5.71	6.55	5.62	5.48
125	T.C.	32.9	31.7	27.8	37.8	42.3	34.2	34.2	30.2	38.6	43.2	35.6	36.7	32.7	39.3	44.1
	S.C.	33.4	32.1	27.3	28.7	21.7	34.7	34.6	30.0	30.6	22.9	36.1	37.2	32.7	32.6	24.1
	KW	7.84	8.30	8.72	6.57	6.21	7.16	7.40	8.24	6.47	6.20	6.48	6.50	7.76	6.38	6.20

NOTE: ALL CAPACITIES INCLUDE INDOOR FAN HEAT AT 1250 BTUH/1000 CFM.

Multipliers for determining the performance with other indoor sections.

NOTE: For dry bulb temperatures different than those listed (between 73-87 F), sensible capacity increases by 1060 BTUH per 1000 CFM per degree above the listed temperature and decreases by 1060 BTUH per 1000 CFM per degree below the listed temperature.

Air Handlers	Coils	T.C.	S.C.	KW
–	FC/MC62	1.01	1.01	1.00
–	HD48	1.00	0.99	1.00
AHP/SHP60	–	0.97	0.98	0.97
AHX48	–	1.00	1.02	0.98
AHX60	–	1.01	1.03	0.99
AV/SV*48	–	0.99	1.00	0.97
AV/SV*60	–	1.00	1.01	0.98
F*FV060	–	0.97	0.98	0.96
F5FP048	–	1.01	1.04	0.97
F5FP060	–	0.98	0.99	0.97
F6FP048	–	0.96	0.98	1.00
F6FP060	–	1.02	1.04	1.02
MV16C	FC/MC48C	1.01	1.01	0.96
MV20D	FC/MC48D	1.01	1.01	0.97
MV20D	FC/MC60D	0.97	0.98	0.96
MV20D	FC/MC62D	1.02	1.02	0.96

Continued on next page.

Furnaces	Coils	T.C.	S.C.	KW
T*(8,L)X*C16	FC/MC/PC48C	1.00	1.01	1.00
T*(8,L)X*C20	FC/MC/PC48C	1.01	1.02	0.99
T*9X*C16	FC/MC/PC48C	1.00	0.99	1.00
T*9X*C20	FC/MC/PC48C	1.00	1.01	1.00
T*9X*D20	FC/MC/PC48D	1.00	1.01	1.00
T*(8,L)X*C16	FC/PC60C	0.99	0.99	0.99
T*(8,L)X*C20	FC/PC60C	0.99	0.99	0.99
T*(8,L)X*C20	FC/MC/PC60D	0.99	0.99	0.99
T*9X*C16	FC/PC60C	0.97	0.99	0.99
T*9X*C20	FC/PC60C	0.97	0.99	0.99
T*9X*D20	FC/MC/PC60D	0.99	0.97	0.97
T*(8,L)X*C16	FC/MC62D	1.00	1.02	1.00
T*(8,L)X*C20	FC/MC62D	1.01	1.02	0.99
T*9X*C16	FC/MC62D	1.00	1.01	1.00
T*9X*C20	FC/MC62D	1.01	1.02	1.01
T*9X*D20	FC/MC62D	1.00	1.01	1.00
T*(8,L)X*C16	HD48	1.02	1.00	0.98
T*(8,L)X*C20	HD48	1.02	1.00	0.98
T*9X*C16	HD48	1.02	1.00	0.98
T*9X*C20	HD48	1.02	1.00	0.98
T*9X*D20	HD48	1.02	1.00	0.98
T*(8,L)X*C16	UC48C	0.97	0.97	1.01
T*(8,L)X*C20	UC48C	0.96	0.94	0.96
T*9X*C16	UC48C	0.96	0.97	1.00
T*9X*C20	UC48C	0.97	0.97	0.99
T*9X*D20	UC48D	0.96	0.97	1.00
T*(8,L)X*C16	UC60C	0.97	0.96	0.99
T*(8,L)X*C20	UC60C	0.96	0.95	0.94
T*(8,L)X*C20	UC60D	0.96	0.95	0.94
T*9X*D20	UC60D	0.96	0.94	0.96
(Y*(8,L)C/T*8V)*C16	FC/MC/PC48C	1.00	1.01	0.98

Furnaces	Coils	T.C.	S.C.	KW
(Y*(8,L)C/T*8V)*C20	FC/MC/PC48C	1.01	1.02	0.99
Y*9C*C16	FC/MC/PC48C	1.00	1.00	0.99
Y*9C*C20	FC/MC/PC48C	1.01	1.02	0.99
Y*9C*D20	FC/MC/PC48D	1.01	1.02	0.99
Y*9C*D20	FC/MC/PC60D	1.00	1.02	0.98
Y*9C*D20	FC/MC62D	1.01	1.02	0.98
(Y*(8,L)C/T*8V)*C16	FC/PC60C	1.01	1.02	0.98
(Y*(8,L)C/T*8V)*C20	FC/PC60C	1.01	1.02	0.96
Y*9C*C16	FC/PC60C	1.00	1.02	0.99
Y*9C*C20	FC/PC60C	1.00	1.02	0.99
Y*9C*D20	HC60	0.98	0.99	0.99
(Y*(8,L)C/T*8V)*C16	HD48	1.00	0.99	0.99
(Y*(8,L)C/T*8V)*C20	HD48	1.00	0.99	0.99
Y*9C*C16	HD48	1.00	0.99	0.99
Y*9C*C20	HD48	1.00	0.99	0.99
Y*9C*D20	HD48	1.00	0.99	0.99
(Y*(8,L)C/T*8V)*C16	HD60	1.01	1.02	0.98
(Y*(8,L)C/T*8V)*C20	HD60	1.01	1.02	0.96
Y*9C*C16	HD60	1.00	1.01	0.99
Y*9C*C20	HD60	1.00	1.01	0.99
Y*9C*D20	HD60	1.01	1.02	0.99
(Y*(8,L)C/T*8V)*C16	UC48C	0.97	0.98	0.98
(Y*(8,L)C/T*8V)*C20	UC48C	0.97	0.98	0.98
Y*9C*C16	UC48C	0.97	0.98	0.99
Y*9C*C20	UC48C	0.97	0.98	0.99
Y*9C*D20	UC48D	0.97	0.98	0.99
(Y*(8,L)C/T*8V)*C16	UC60C	0.98	0.97	0.98
(Y*(8,L)C/T*8V)*C20	UC60C	0.98	0.98	0.96
Y*9C*C16	UC60C	0.97	0.97	0.99
Y*9C*C20	UC60C	0.97	0.97	0.99
Y*9C*D20	UC60D	0.98	0.97	0.99

COOLING PERFORMANCE DATA

AIR CONDITIONER MODEL NO.		TCHD60S41S3														
INDOOR COIL MODEL NO.		FC/MC62														
CONDENSING ENTERING AIR TEMPERATURE	IDCFM	1750					2000					2250				
	ID DB (°F)	80	80	75	80	80	80	80	75	80	80	80	80	75	80	80
	ID WB (°F)	57	62	62	67	72	57	62	62	67	72	57	62	62	67	72
65	T.C.	54.0	58.2	58.3	62.9	68.5	55.4	59.4	59.3	64.2	69.8	56.9	60.6	60.3	65.4	71.0
	S.C.	54.6	49.2	41.5	41.2	31.7	56.0	51.9	43.5	43.0	32.8	57.5	54.5	45.5	44.8	34.0
	KW	3.32	3.35	3.32	3.40	3.48	3.34	3.37	3.34	3.43	3.50	3.37	3.39	3.36	3.45	3.52
75	T.C.	51.8	55.7	55.7	60.6	66.1	53.3	56.9	56.7	61.8	67.3	54.8	58.0	57.8	63.0	68.5
	S.C.	52.4	47.8	40.2	39.9	30.8	53.9	50.4	42.2	41.8	31.9	55.4	53.1	44.2	43.7	33.1
	KW	3.96	3.98	3.98	4.00	4.05	3.97	3.99	3.98	4.01	4.06	3.98	3.99	3.99	4.03	4.08
85	T.C.	49.7	53.3	53.2	58.3	63.8	51.2	54.3	54.2	59.4	64.9	52.8	55.4	55.2	60.5	66.0
	S.C.	50.2	46.4	38.9	38.6	29.8	51.8	49.0	40.9	40.6	31.0	53.4	51.7	42.9	42.5	32.1
	KW	4.61	4.61	4.63	4.59	4.61	4.59	4.60	4.62	4.60	4.62	4.58	4.60	4.61	4.60	4.63
95	T.C.	47.6	50.8	50.6	55.9	61.4	49.2	51.8	51.6	57.0	62.4	50.7	52.8	52.6	58.1	63.4
	S.C.	48.1	45.0	37.6	37.4	28.9	49.7	47.6	39.6	39.3	30.1	51.3	50.2	41.5	41.3	31.2
	KW	5.25	5.23	5.29	5.19	5.18	5.22	5.22	5.26	5.18	5.18	5.18	5.20	5.24	5.17	5.19
105	T.C.	44.8	47.6	47.4	52.8	58.3	46.3	48.6	48.3	53.8	59.3	47.8	49.7	49.2	54.9	60.3
	S.C.	45.2	43.1	36.1	36.0	27.8	46.8	45.7	38.0	38.0	29.0	48.3	48.2	39.9	39.9	30.1
	KW	6.46	6.36	6.48	6.18	6.04	6.35	6.31	6.42	6.15	6.01	6.25	6.25	6.36	6.11	5.98
115	T.C.	42.0	44.4	44.3	49.8	55.2	43.5	45.6	45.2	50.8	56.3	45.0	46.7	46.0	51.7	57.4
	S.C.	42.4	41.3	34.6	34.7	26.8	43.9	43.8	36.5	36.6	27.9	45.4	46.3	38.4	38.6	29.1
	KW	7.64	7.46	7.63	7.14	6.88	7.46	7.36	7.54	7.08	6.81	7.28	7.27	7.45	7.03	6.75
125	T.C.	39.3	41.3	41.2	46.8	52.1	40.7	42.5	42.0	47.7	53.2	42.1	43.7	42.8	48.6	54.4
	S.C.	39.6	39.5	33.2	33.4	25.7	41.1	41.9	35.0	35.3	26.9	42.5	44.3	36.9	37.2	28.1
	KW	8.81	8.56	8.78	8.10	7.72	8.56	8.42	8.66	8.02	7.62	8.31	8.29	8.54	7.94	7.52

NOTE: ALL CAPACITIES INCLUDE INDOOR FAN HEAT AT 1250 BTUH/1000 CFM.

Multipliers for determining the performance with other indoor sections.

NOTE: For dry bulb temperatures different than those listed (between 73-87 F), sensible capacity increases by 1060 BTUH per 1000 CFM per degree above the listed temperature and decreases by 1060 BTUH per 1000 CFM per degree below the listed temperature.

Air Handlers	Coils	T.C.	S.C.	KW
AHX60	–	1.01	1.02	1.01
AV/SV*60	–	0.98	0.96	0.98
F6FP060	–	0.99	0.98	0.99
F*FV060	–	0.96	0.96	0.96
MV20D	FC/MC62D	1.01	1.00	0.98

Furnaces	Coils	T.C.	S.C.	KW
T*(8,L)X*C20	FC/MC62D	0.99	0.97	0.97
Y*9C*C20	FC/MC62D	0.99	0.96	0.98
Y*9C*D20	FC/MC62D	0.99	0.96	0.97
(Y*(8,L)C/T*8V)*C16	HD60	1.00	0.99	0.99
(Y*(8,L)C/T*8V)*C20	HD60	0.98	0.96	0.95
Y*9C*C16	HD60	0.98	0.95	0.96
Y*9C*C20	HD60	0.98	0.95	0.97
Y*9C*D20	HD60	0.98	0.95	0.97

Subject to change without notice. Published in U.S.A.
Copyright © 2010 by Johnson Controls, Inc. All rights reserved.

556454-YTG-B-0410
Supersedes: 556454-YTG-A-0310

Johnson Controls Unitary Products
5005 York Drive
Norman, OK 73069