YORK®
Heating and Air Conditioning

TECHNICAL GUIDE

LATITUDE™ SERIES
SPLIT-SYSTEM HEAT PUMPS
14.5 SEER – R-410A – 1 PHASE
1.5 THRU 5 NOMINAL TONS
MODELS: THGF18 THRU 60

AHRI CERTIFIED™ www.ahridirectory.org Unitary Small HP AHRI Standard 210/240 Certification applies only when the complete system is listed with AHRI.

Limited Warranty to Consumers Good Housekeeping Promises Replacement or Refund if Defective

CSA® C US

Energy ENERGY STAR

ISO 9000 Registration ISO 9001 Certified Quality Management System

Due to continuous product improvement, specifications are subject to change without notice.

Visit us on the web at
www.upgnet.com and www.york.com

Additional rating information can be found at
www.ahridirectory.org

WARRANTY SUMMARY*

Standard 5-Years limited parts warranty.
Standard 10-Years limited compressor warranty.

Extended 10-Years limited parts warranty when product is registered online within 90 days of purchase for replacement or closing for new home construction.

*Does not apply to R-22 models, 3-Phase models, or internet sales.
See Limited Warranty certificate in User's Information Manual for details.

DESCRIPTION

The 14.5 SEER Series unit is the outdoor part of a versatile climate system. It is designed with a matching indoor coil component from Johnson Controls Unitary Products. Available for typical applications this climate system is supported with accessories and documents to serve specific functions.

FEATURES

- **Small Footprint -** The compact footprint is a perfect fit for any application.
- **Quality Condenser Coils -** The coil is constructed of copper tubing and enhanced aluminum fins for increased performance.
- **Coil Protection -** Coils are protected from damage by a sturdy polymer mesh and a coated steel wire coil guard.
- **Protected Compressor -** Compressors are protected internally by a high pressure relief valve and a temperature sensor, and externally by the system high pressure switch. A factory installed liquid line filter-drier further protects the compressor against moisture and debris. The 5-ton system utilizes a two-stage compressor.
- **Environmentally Friendly Refrigerant -** The next generation refrigerant R-410A delivers environmentally friendly performance with zero ozone depletion.
- **Durable Finish -** The cabinet is made of G90-equivalent prepainted steel, with special primer formulas and matte champagne texture to insure less fading when exposed to sunlight. The coated steel wire fan and coil guards and pretreated, galvanized steel chassis components resist corrosion and rust creep.
- **Lower Installed Cost -** Installation time and costs are reduced by easy power and control wiring connections. The unit is factory charged for a 15-foot lineset. The small base dimension means less space is required on the ground or roof.
- **Top Discharge -** Warm air from the top mounted fan is blown up, away from the structure and any landscaping. This allows compact location on multi-unit applications.
- **Low Operating Sound Level -** The upward air flow carries the normal operating noise away from the living area. The rigid top panel effectively isolates any motor sound. Isolator mounted compressor and the condenser coil muffle the normal fan motor and compressor operating sounds.
- **Low Maintenance -** Long life, permanently lubricated motor-bearings need no annual servicing.
- **Easy Service Access -** Fully exposed refrigerant connections and a single panel covering the electrical controls make for easy servicing of the unit.
- **Secured Service Valves -** Secured, re-usable service valves are provided on both the liquid and vapor sweat connections for ease of evacuating and charging.
- **Agency Listed -** Safety certified by CSA to UL 1995 / CSA 22.2. Performance certified to ANSI/AHRI Standard 210/240 in accordance with the Unitary Small Equipment certification program.

Physical and Electrical Data

MODEL		THGF18 S41S3	THGF24 S41S3	THGF30 S41S3	THGF36 S41S4	THGF42 S41S3	THGF48 S41S3	THGF60 S41S3
Unit Supply Voltage		208-230V, 1ϕ, 60Hz						
Normal Voltage Range [1]		187 to 252						
Minimum Circuit Ampacity		11.9	17.6	17.3	19.7	26.1	28.8	35.3
Max. Overcurrent Device Amps [2]		20	30	30	30	45	50	60
Min. Overcurrent Device Amps [3]		15	20	20	20	30	30	40
Compressor Type		Scroll	Scroll	Scroll	Recip	Scroll	Scroll	2-Stage Scroll
Compressor Amps	Rated Load	9.0	13.4	12.8	14.7	19.8	28.8	35.3
	Locked Rotor	48.0	58.3	64.0	74.0	115.0	115.0	118.0
Crankcase Heater		No	No	No	Yes	No	No	No
Factory External Discharge Muffler		Yes	Yes	Yes	Combined DM/CV	Yes	Yes	Yes
Factory External Check Valve		No	No	No		No	No	No
HS Kit Required with TXV [4]		No	No	No	Yes	No	No	No
Fan Motor Amps	Rated Load	0.7	0.8	1.3	1.3	1.3	1.3	1.3
Fan Diameter Inches		24	22	24	24	24	24	24
Fan Motor	Rated HP	1/10	1/8	1/4	1/4	1/4	1/4	1/4
	Nominal RPM	825	1075	850	850	850	850	850
	Nominal CFM	2000	2000	3900	3800	3900	3800	3800
Coil	Face Area Sq. Ft.	15.72	19.17	23.58	23.58	23.58	23.58	23.58
	Rows Deep	1	1	1	1	1	2	2
	Fins / Inch	22	22	22	22	22	18	18
Liquid Line Set OD (Field Installed)		3/8	3/8	3/8	3/8	3/8	3/8	3/8
Vapor Line Set OD (Field Installed)		3/4	3/4	3/4	3/4	7/8	7/8	1-1/8
Unit Charge (Lbs. - Oz.) [5]		6 - 15	7 - 14	9 - 14	10 - 6	10 - 14	14 - 2	14 - 2
Charge Per Foot, Oz.		0.62	0.62	0.62	0.62	0.67	0.67	0.75
Operating Weight Lbs.		145	145	176	193	198	248	290

1. Rated in accordance with AHRI Standard 110-2012, utilization range “A”.
2. Dual element fuses or HACR circuit breaker. Maximum allowable overcurrent protection.
3. Dual element fuses or HACR circuit breaker. Minimum recommended overcurrent protection.
4. See Hard Start Kit Accessory Installation Manual for Hard Start Kit part number for each model.
5. The Unit Charge is correct for the outdoor unit, smallest matched indoor unit, and 15 feet of refrigerant tubing. For tubing lengths other than 15 feet, add or subtract the amount of refrigerant, using the difference in length multiplied by the per foot value.

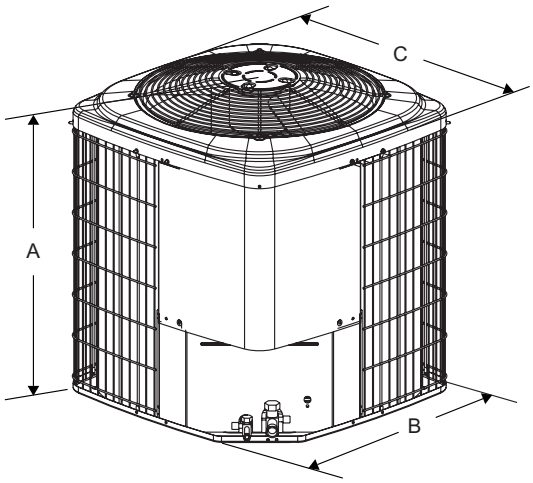

Unit Model	Dimensions (Inches)			Refrigerant Connection Service Valve Size	
	A	B	C	Liquid	Vapor
18	28-1/4	34	34	3/8	3/4
24	40-1/4	29-1/2	29-1/2		
30	40-1/4	34	34		
36	40-1/4	34	34		
42	40-1/4	34	34		7/8
48	40-1/4	34	34		
60	40-1/4	34	34		7/8 *

* Adapter Fitting Required for 1-1/8" Lilneset.

All dimensions are in inches and are subject to change without notice.
Overall height is from bottom of base pan to top of fan guard.
Overall length and width include screw heads.

System Charge for Various Matched Systems							
Outdoor Unit	THGF18S41S3	THGF24S41S3	THGF30S41S3	THGF36S41S4	THGF42S41S3	THGF48S41S3	THGF60S41S3
Required Orifice or TXV [1,2]	.051/4F1	.059/4G1	.063/4G1	.071/4H1	.073, .075/4J1	4K1	4K1
Indoor Unit [3,4,5]	**Additional Charge, Oz**						
AHE24B	.051 / TXV + 0	.059 / TXV + 0	–	–	–	–	–
AHE30B	.051 / TXV + 0	.059 / TXV + 0	–	–	–	–	–
AHE36C	–	–	.063 / TXV + 0	.071 / TXV + 0	–	–	–
AHE42D	–	–	–	.071 / TXV + 5	.073 / TXV - 10	–	–
AHE48D	–	–	–	.071 / TXV + 25	.073 / TXV - 6	–	–
AHE60D	–	–	–	–	.075 / TXV + 0	TXV + 0	TXV + 0
AHR24B	.051 / TXV + 0	.059 / TXV + 0	–	–	–	–	–
AHR36B	–	–	.063 / TXV + 0	.071 / TXV + 0	–	–	–
AHR42C	–	–	–	.071 / TXV + 5	.073 / TXV - 10	–	–
AHR48D	–	–	–	–	.073 / TXV - 6	–	–
AHR60D	–	–	–	–	.075 / TXV + 0	TXV + 0	–
AHV24B	.051 / TXV + 0	.059 / TXV + 0	–	–	–	–	–
AHV30B	.051 / TXV + 0	.059 / TXV + 0	–	–	–	–	–
AHV36C	.051 / TXV + 13	.059 / TXV + 12	.063 / TXV + 0	.071 / TXV + 0	–	–	–
AHV42D	–	–	–	.071 / TXV + 11	–	–	–
AHV48D	–	–	–	.071 / TXV + 31	.073 / TXV - 6	–	–
AHV60D	–	–	–	–	.075 / TXV + 0	TXV + 0	TXV + 0
AV*36	.051 / TXV + 13	.059 / TXV + 12	.063 / TXV + 0	.071 / TXV + 0	–	–	–
AV*48	–	–	–	.071 / TXV + 25	–	–	–
FC/MC/PC32	.051 / TXV + 0	.059 / TXV + 0	–	–	–	–	–
FC/MC/PC35	.051 / TXV + 0	.059 / TXV + 0	–	–	–	–	–
FC/MC/PC37	.051 / TXV + 13	.059 / TXV + 12	.063 / TXV + 0	.071 / TXV + 0	–	–	–
FC/MC/PC43	.051 / TXV + 13	.059 / TXV + 12	.063 / TXV + 0	.071 / TXV + 0	–	–	–
FC/MC/PC48	–	–	–	.071 / TXV + 5	.073 / TXV - 10	–	–
FC/MC/PC60	–	–	–	.071 / TXV + 25	.073 / TXV - 6	–	–
FC/MC62	–	–	–	–	.075 / TXV + 0	TXV + 0	TXV + 0
FC64	–	–	–	–	–	TXV + 8	TXV + 8
UC48	–	–	–	.071 / TXV + 23	–	–	–
UC60	–	–	–	.071 / TXV + 38	–	–	–
Some of the combinations shown in the above System Charge table require Advanced Main Air Circulating Fan indoor product. For approved coil only matches, please see the “COOLING CAPACITY - Upflow, Downflow & Horizontal Furnaces and Coils” table.							

FOOTNOTES:

1. For applications requiring a TXV use S1-1TVM*** series kit.
2. Approved orifice(s) shipped with outdoor unit.
3. Systems matched with furnaces or air handlers not equipped with blower-off delays may require blower Time Delay Kit S1-2FD06700224.
4. PC coils cannot be used in downflow or horizontal applications. FC coils cannot be used in horizontal applications.
5. Refer to Cooling and Heating Performance Data tables for actual performance for specified system matches.

PROCEDURES:

1. Unit factory charge listed on the unit nameplate includes refrigerant for the outdoor unit, the smallest matched indoor unit, and 15 feet of interconnecting line tubing.
2. Verify the TXV or orifice and additional charge required for specific matched indoor unit in the system using the above table.
3. Add additional charge for the amount of interconnecting line tubing greater than 15 feet at the rate specified in Physical and Electrical Data Table.
4. For indoor matches requiring additional charge, the refrigerant needs to be weighed in for specific matched indoor unit and lineset length.
5. Permanently mark the unit nameplate with the total system charge. Total System Charge = Base Charge (as shipped) + charge adder for matched indoor unit + charge adder for line set.

COOLING CAPACITY - With Air Handler Coils

UNIT MODEL	AIR HANDLER		COIL [1] MODEL	COOLING				
	MODEL	WIDTH		RATED CFM	NET MBH TOTAL	NET MBH SENS.	SEER	EER
14.5 SEER HP WITH AIR HANDLERS								
THGF18S41S3	AHE24B	17.5	–	585	18.0	13.3	14.50	12.00
	AHE30B	17.5	–	660	18.0	13.1	15.00	12.50
	AHR24B	17.5	–	675	18.0	13.1	13.00	11.00
	AHV24B	17.5	–	580	18.0	13.4	14.50	12.50
	AHV30B	17.5	–	700	18.0	14.6	14.50	12.50
	AHV36C	21.0	–	670	18.0	14.5	15.00	12.50
	AV*36	21.0	–	630	18.0	13.3	15.00	12.50
	MV12B	17.5	FC/MC35B	600	18.0	13.0	15.00	12.50
	MV12B	17.5	FC/MC43B	600	18.0	13.3	15.00	12.50
	MX12B	17.5	FC/MC35B	660	18.0	13.8	15.00	12.50
	MX12B	17.5	FC/MC43B	620	18.0	13.6	15.00	12.50
THGF24S41S3	AHE24B	17.5	–	825	23.0	17.4	15.00	12.50
	AHE30B	17.5	–	800	23.0	17.4	15.00	12.50
	AHR24B	17.5	–	740	22.2	16.0	13.25	11.35
	AHV24B	17.5	–	710	22.6	16.5	14.50	12.50
	AHV30B	17.5	–	775	22.8	17.1	14.50	12.50
	AHV36C	21.0	–	760	23.2	17.3	15.00	12.50
	AV*36	21.0	–	725	22.8	16.8	15.00	12.50
	MV12B	17.5	FC/MC35B	800	22.8	17.2	15.00	12.50
	MV12B	17.5	FC/MC43B	800	23.4	18.0	15.00	12.50
	MX12B	17.5	FC/MC35B	815	23.2	17.5	15.00	12.50
	MX12B	17.5	FC/MC43B	735	23.0	16.9	15.00	12.50
THGF30S41S3	AHE36C	21.0	–	1000	30.0	21.7	15.00	12.50
	AHR36B	17.5	–	1060	28.8	22.0	13.25	11.35
	AHV36C	21.0	–	895	28.6	26.2	15.00	12.50
	AV*36	21.0	–	960	29.2	21.8	15.00	12.50
	MV12B	17.5	FC/MC43B	1000	29.0	21.6	15.00	12.50
	MV16C	21.0	FC/MC43C	1000	29.0	21.6	15.00	12.50
	MX12B	17.5	FC/MC43B	1095	30.0	22.3	15.00	12.50
	MX16C	21.0	FC/MC43C	970	30.0	21.5	15.00	12.50
THGF36S41S4	AHE36C	17.5	–	1275	36.0	27.4	14.50	12.00
	AHE42D	24.5	–	1180	36.0	26.4	15.00	12.50
	AHE48D	24.5	–	1195	36.0	26.6	15.00	12.50
	AHR36B	17.5	–	1245	36.0	26.2	13.25	11.35
	AHR42C	21.0	–	1230	36.0	26.4	13.25	11.35
	AHV36C	21.0	–	1215	36.0	27.6	14.00	12.00
	AHV42D	24.5	–	1180	36.0	27.8	15.00	12.50
	AHV48D	24.5	–	1155	36.0	27.2	15.00	12.50
	AV*36	21.0	–	1190	36.0	26.2	14.50	12.00
	AV*48	24.5	–	1220	36.0	27.4	15.00	12.50
	MV12B	17.5	FC/MC43B	1225	36.0	26.2	14.00	12.00
	MV12D	24.5	FC/MC48D	1160	36.0	26.6	15.00	12.50
	MV12D	24.5	FC/MC60D	1135	36.0	26.2	14.50	12.00
	MV16C	21.0	FC/MC43C	1200	36.0	26.2	14.50	12.00
	MV16C	21.0	FC/MC48C	1200	36.0	26.4	14.50	12.00
	MV16C	21.0	FC60C	1200	36.0	27.0	15.00	12.50
	MX12B	17.5	FC/MC43B	1220	36.0	26.0	14.00	12.00
	MX12D	24.5	FC/MC48D	1225	36.0	26.4	14.50	12.00
	MX12D	24.5	FC/MC60D	1275	36.0	27.8	15.00	12.50
	MX16C	21.0	FC/MC43C	1140	36.0	25.8	14.50	12.00
	MX16C	21.0	FC/MC48C	1150	36.0	26.6	15.00	12.50
	MX16C	21.0	FC60C	1150	36.0	26.8	15.00	12.50

For notes, see Page 5.

COOLING CAPACITY - With Air Handler Coils (Continued)

UNIT MODEL	AIR HANDLER		COIL [1] MODEL	COOLING				
	MODEL	WIDTH		RATED CFM	NET MBH TOTAL	NET MBH SENS.	SEER	EER
14.5 SEER HP WITH AIR HANDLERS								
THGF42S41S3	AHE42D	24.5	–	1385	40.5	30.2	15.00	12.50
	AHE48D	24.5	–	1385	40.5	30.0	15.00	12.50
	AHE60D	24.5	–	1390	40.0	30.8	15.00	12.50
	AHR42C	21.0	–	1485	40.0	30.4	13.25	11.35
	AHR48D	24.5	–	1320	39.0	28.4	13.25	11.35
	AHR60D	24.5	–	1350	39.5	29.6	13.25	11.35
	AHV48D	24.5	–	1155	39.5	29.2	14.50	12.50
	AHV60D	24.5	–	1340	40.5	31.6	14.50	12.00
	MV16C	21.0	FC/MC48C	1400	40.5	30.0	14.50	12.00
	MV16C	21.0	FC60C	1400	40.5	30.2	14.50	12.00
	MV20D	24.5	FC/MC48D	1470	41.0	31.0	15.00	12.50
	MV20D	24.5	FC/MC60D	1400	40.5	30.2	15.00	12.50
	MV20D	24.5	FC/MC62D	1400	40.5	31.2	15.00	12.50
	MX16C	21.0	FC/MC48C	1390	40.5	30.2	15.00	12.50
	MX16C	21.0	FC60C	1420	40.5	30.4	15.00	12.50
	MX20D	24.5	FC/MC48D	1415	40.5	30.0	15.00	12.50
	MX20D	24.5	FC/MC60D	1470	41.0	31.4	15.00	12.50
	MX20D	24.5	FC/MC62D	1470	40.5	31.8	15.00	12.50
THGF48S41S3	AHE60D	24.5	–	1565	47.0	35.4	15.00	12.50
	AHR60D	24.5	–	1620	47.5	35.6	13.25	11.35
	AHV60D	24.5	–	1570	47.5	34.8	14.50	12.50
	MV20D	24.5	FC/MC62D	1630	48.0	36.2	15.00	12.50
	MV20D	24.5	FC64D	1630	48.0	36.2	15.00	12.50
	MX20D	24.5	FC/MC62D	1605	47.0	35.1	15.00	12.50
	MX20D	24.5	FC64D	1605	47.0	35.7	15.00	12.50

Rated in accordance with DOE test procedures (Federal Register 12-27-79 and 3-18-88) and ANSI/AHRI Standard 210/240.
Cooling MBH based on 80 °F entering air temperature, 50% RH (Relative Humidity), and rated air flow.
EER (Energy Efficiency Ratio) is the total cooling output in BTUs at 95 °F outdoor ambient divided by the total electric power in watt-hours at those conditions.
SEER (Seasonal Energy Efficiency Ratio) is the total cooling output in BTUs during a normal annual usage period for cooling divided by the total electric power input in watt-hours during the same period.

1. MC coils available with a factory installed horizontal drain pan. See price pages for specific model number.

— = Not applicable.

MA Modular Air Handlers use Coil Only Ratings.

COOLING CAPACITY - With Air Handler Coils

UNIT MODEL	AIR HANDLER		COIL MODEL[1]	STAGE	COOLING				
	MODEL	WIDTH			RATED CFM	NET MBH TOTAL	NET MBH SENS.	SEER	EER
14.5 SEER HP WITH AIR HANDLERS									
THGF60S41S3	AHE60D	24.5	–	1	1160	46.0	29.8	15.00	12.20
				2	1835	57.0	41.0		
	AHV60D	24.5	–	1	1090	46.5	30.8	15.00	11.75
				2	1635	57.0	40.5		
	MV20D	24.5	FC/MC62D	1	1160	48.0	31.0	15.00	12.00
				2	1855	57.0	40.5		
	MV20D	24.5	FC64D	1	1160	50.0	32.6	15.00	12.50
				2	1855	59.0	42.5		
	MX20D	24.5	FC/MC62D	1	1390	48.0	32.4	15.00	12.50
				2	1795	57.5	41.0		
	MX20D	24.5	FC64D	1	1390	49.5	33.8	15.00	12.50
				2	1795	58.0	42.0		

Rated in accordance with DOE test procedures (Federal Register 12-27-79 and 3-18-88) and ANSI/AHRI Standard 210/240.
Cooling MBH based on 80 °F entering air temperature, 50% RH (Relative Humidity), and rated air flow.
EER (Energy Efficiency Ratio) is the total cooling output in BTUs at 95 °F outdoor ambient divided by the total electric power in watt-hours at those conditions.
SEER (Seasonal Energy Efficiency Ratio) is the total cooling output in BTUs during a normal annual usage period for cooling divided by the total electric power input in watt-hours during the same period.

1. MC coils available with a factory installed horizontal drain pan. See price pages for specific model number.

— = Not applicable.

MA Modular Air Handlers use Coil Only Ratings.

COOLING CAPACITY - Upflow, Downflow & Horizontal Furnaces and Coils (Coil Only Ratings)

UNIT MODEL	COIL		CFM RANGE (Min.-max.)	STAGE	COOLING				
	MODEL	WIDTH			RATED CFM	NET MBH		SEER[1]	EER
						TOTAL	SENS.		
14.5 SEER HP COIL ONLY RATINGS									
THGF18S41S3	FC/MC/PC32	14.5	450 - 750	–	600	18.0	12.6	13.25	11.35
	FC/MC/PC35	17.5,21.0	450 - 750	–	600	18.0	12.6	13.20	11.35
	FC/MC/PC37	14.5	450 - 750	–	600	18.0	13.2	13.25	11.35
	FC/MC/PC43	17.5,21.0	450 - 750	–	600	18.0	13.2	13.25	11.35
THGF24S41S3	FC/MC/PC32	14.5	600 - 1000	–	800	22.2	16.3	13.25	11.35
	FC/MC/PC35	17.5,21.0	600 - 1000	–	800	22.4	16.3	13.20	11.35
	FC/MC/PC37	14.5	600 - 1000	–	800	22.4	16.6	13.25	11.35
	FC/MC/PC43	17.5,21.0	600 - 1000	–	800	22.4	16.6	13.25	11.35
THGF30S41S3	FC/MC/PC37	14.5	800 - 1200	–	1000	28.6	21.6	13.25	11.35
	FC/MC/PC43	17.5,21.0	800 - 1200	–	1000	28.4	21.6	13.50	11.35
THGF36S41S4	FC/MC/PC37	14.5	1000 - 1400	–	1200	35.8	25.6	13.25	11.35
	FC/MC/PC43	17.5,21.0	1000 - 1400	–	1200	35.8	25.8	13.25	11.35
	FC/MC/PC48	21.0,24.5	1000 - 1400	–	1200	35.8	25.8	13.25	11.35
	FC/MC/PC60	21.0,24.5	1000 - 1400	–	1200	36.0	26.0	13.25	11.35
	UC48	21.0,24.5	1000 - 1400	–	1200	36.4	26.2	13.25	11.35
	UC60	21.0,24.5	1000 - 1400	–	1200	36.2	26.0	13.25	11.35
THGF42S41S3	FC/MC/PC48	21.0,24.5	1200 - 1600	–	1400	39.5	29.4	13.30	11.40
	FC/MC/PC60	–	1200 - 1600	–	1400	40.0	29.6	13.30	11.40
	FC/MC62	24.5	1200 - 1600	–	1400	37.2	30.0	13.30	11.35
THGF48S41S3	FC/MC62	24.5	1400 - 1800	–	1600	47.0	35.4	13.50	11.35
THGF60S41S3	FC/MC62	24.5	1150 - 1550	1	1350	48.0	31.8	13.30	11.35
	FC/MC62	24.5	1600 - 2000	2	1800	56.5	39.5	13.30	11.35

1. Requires a S1-2FD06700224 Blower Time Delay unless a standard furnace is equipped with one.

MA Modular Air Handlers use Coil Only Ratings.

PSC furnaces, such as the TG8S, TGLS ,TG9S, use Coil Only Ratings.

COOLING CAPACITY - With High Efficiency Motor Furnaces

UNIT MODEL	FURNACE		COIL[1] MODEL	COOLING				
	MODEL	WIDTH		RATED CFM	NET MBH		SEER	EER
					TOTAL	SENS.		
14.5 SEER HP WITH HIGH EFFICIENCY MOTOR FURNACES[2]								
THGF18S41S3	T*(8,L)V*A12	14.5	FC/MC/PC32A	590	18.0	13.0	15.00	12.50
	T*(8,L)V*A12	14.5	FC/MC/PC37A	625	18.0	13.3	15.00	12.50
	T*(8,L)V*B12	17.5	FC/MC/PC35B	650	18.0	13.4	15.00	12.50
	T*(8,L)V*B12	17.5	FC/MC/PC43B	560	18.0	12.8	15.00	12.50
	T*(8,L)V*C16	21.0	FC/MC/PC35C	600	18.0	13.0	15.00	12.50
	T*(8,L)X*A12	14.5	FC/MC/PC32A	590	18.0	13.0	15.00	12.50
	T*(8,L)X*A12	14.5	FC/MC/PC37A	640	18.0	14.3	15.00	12.50
	T*(8,L)X*B12	17.5	FC/MC/PC35B	640	18.0	14.1	15.00	12.50
	T*(8,L)X*B12	17.5	FC/MC/PC43B	665	18.0	14.6	15.00	12.50
	T*(8,L)X*C16	21.0	FC/MC/PC35C	625	18.0	13.4	15.00	12.50
	T*9V*A10	14.5	FC/MC/PC32A	580	17.5	13.3	14.00	12.00
	T*9V*A10	14.5	FC/MC/PC37A	570	17.5	13.2	14.00	12.00
	T*9(C,V)*B12	17.5	FC/MC/PC35B	570	18.0	13.0	15.00	12.50
	T*9(C,V)*C16	21.0	FC/MC/PC35C	645	18.0	13.4	15.00	12.50
	T*9X*A10	14.5	FC/MC/PC32A	585	17.5	13.3	14.00	12.00
	T*9X*A10	14.5	FC/MC/PC37A	580	17.5	13.5	14.50	12.00
	T*9X*B12	17.5	FC/MC/PC35B	645	17.5	14.2	14.00	11.95
	Y*(8,L)C*A12	14.5	FC/MC/PC32A	590	18.0	13.0	15.00	12.50
	Y*(8,L)C*A12	14.5	FC/MC/PC37A	625	18.0	13.3	15.00	12.50
	Y*(8,L)C*B12	17.5	FC/MC/PC35B	650	18.0	13.4	15.00	12.50
	Y*(8,L)C*B12	17.5	FC/MC/PC43B	560	18.0	12.8	15.00	12.50
	Y*(8,L)C*C16	21.0	FC/MC/PC35C	600	18.0	13.0	15.00	12.50
	Y*9C*B12	17.5	FC/MC/PC35B	570	18.0	13.0	15.00	12.50
	Y*9C*C16	21.0	FC/MC/PC35C	645	18.0	13.4	15.00	12.50

For notes, see Page 10.

COOLING CAPACITY - With High Efficiency Motor Furnaces (Continued)

UNIT MODEL	FURNACE		COIL[1] MODEL	COOLING				
	MODEL	WIDTH		RATED CFM	NET MBH		SEER	EER
					TOTAL	SENS.		
14.5 SEER HP WITH HIGH EFFICIENCY MOTOR FURNACES[2]								
THGF24S41S3	T*(8,L)V*A12	14.5	FC/MC/PC32A	775	22.8	17.1	14.50	12.00
	T*(8,L)V*A12	14.5	FC/MC/PC37A	805	23.2	17.9	15.00	12.50
	T*(8,L)V*B12	17.5	FC/MC/PC35B	760	22.6	16.7	15.00	12.50
	T*(8,L)V*B12	17.5	FC/MC/PC43B	760	22.8	17.0	15.00	12.50
	T*(8,L)V*C16	21.0	FC/MC/PC35C	855	23.0	17.7	15.00	12.50
	T*(8,L)V*C16	21.0	FC/MC/PC43C	875	23.4	18.5	15.00	12.50
	T*(8,L)V*C20	21.0	FC/MC/PC35C	740	22.6	16.6	15.00	12.50
	T*(8,L)V*C20	21.0	FC/MC/PC43C	760	23.0	17.1	15.00	12.50
	T*(8,L)X*A12	14.5	FC/MC/PC32A	800	23.0	17.3	15.00	12.50
	T*(8,L)X*A12	14.5	FC/MC/PC37A	840	23.4	18.0	15.00	12.50
	T*(8,L)X*B12	17.5	FC/MC/PC35B	850	23.0	17.8	15.00	12.50
	T*(8,L)X*B12	17.5	FC/MC/PC43B	865	23.4	18.1	15.00	12.50
	T*(8,L)X*C16	21.0	FC/MC/PC35C	865	23.2	18.0	15.00	12.50
	T*(8,L)X*C16	21.0	FC/MC/PC43C	855	23.4	18.1	15.00	12.50
	T*(8,L)X*C20	21.0	FC/MC/PC35C	865	23.2	18.1	15.00	12.50
	T*(8,L)X*C20	21.0	FC/MC/PC43C	815	23.2	17.1	15.00	12.50
	T*9V*A10	14.5	FC/MC/PC32A	785	22.2	16.5	13.60	11.70
	T*9V*A10	14.5	FC/MC/PC37A	790	22.4	16.8	13.65	11.70
	T*9(C,V)*B12	17.5	FC/MC/PC35B	815	22.8	17.1	14.50	12.00
	T*9(C,V)*B12	17.5	FC/MC/PC43B	800	23.2	17.9	15.00	12.50
	T*9(C,V)*C16	21.0	FC/MC/PC35C	865	23.2	18.2	15.00	12.50
	T*9(C,V)*C16	21.0	FC/MC/PC43C	810	23.4	18.0	15.00	12.50
	T*9(C,V)*C20	21.0	FC/MC/PC35C	755	22.6	16.7	15.00	12.50
	T*9(C,V)*C20	21.0	FC/MC/PC43C	875	23.4	18.4	15.00	12.50
	T*9X*A10	14.5	FC/MC/PC32A	745	22.4	16.2	13.80	12.00
	T*9X*A10	14.5	FC/MC/PC37A	740	22.4	16.3	13.95	12.00
	T*9X*B12	17.5	FC/MC/PC35B	785	23.0	17.3	15.00	12.50
	T*9X*B12	17.5	FC/MC/PC43B	800	23.4	18.0	15.00	12.50
	T*9X*C16	21.0	FC/MC/PC35C	765	23.0	17.3	15.00	12.50
	T*9X*C16	21.0	FC/MC/PC43C	785	23.2	17.5	15.00	12.50
	T*9X*C20	21.0	FC/MC/PC35C	825	23.0	17.2	15.00	12.50
	T*9X*C20	21.0	FC/MC/PC43C	790	23.2	17.4	15.00	12.50
	Y*(8,L)C*A12	14.5	FC/MC/PC32A	775	22.8	17.1	14.50	12.00
	Y*(8,L)C*A12	14.5	FC/MC/PC37A	805	23.2	17.9	15.00	12.50
	Y*(8,L)C*B12	17.5	FC/MC/PC35B	760	22.6	16.7	15.00	12.50
	Y*(8,L)C*B12	17.5	FC/MC/PC43B	760	22.8	17.0	15.00	12.50
	Y*(8,L)C*C16	21.0	FC/MC/PC35C	855	23.0	17.7	15.00	12.50
	Y*(8,L)C*C16	21.0	FC/MC/PC43C	875	23.4	18.5	15.00	12.50
	Y*(8,L)C*C20	21.0	FC/MC/PC35C	740	22.6	16.6	15.00	12.50
	Y*(8,L)C*C20	21.0	FC/MC/PC43C	760	23.0	17.1	15.00	12.50
	Y*9C*B12	17.5	FC/MC/PC35B	815	22.8	17.1	14.50	12.00
	Y*9C*B12	17.5	FC/MC/PC43B	800	23.2	17.9	15.00	12.50
	Y*9C*C16	21.0	FC/MC/PC35C	865	23.2	18.2	15.00	12.50
	Y*9C*C16	21.0	FC/MC/PC43C	810	23.4	18.0	15.00	12.50
	Y*9C*C20	21.0	FC/MC/PC35C	755	22.6	16.7	15.00	12.50
	Y*9C*C20	21.0	FC/MC/PC43C	875	23.4	18.4	15.00	12.50
THGF30S41S3	T*(8,L)V*A12	14.5	FC/MC/PC37A	980	28.6	21.4	14.50	12.00
	T*(8,L)V*B12	17.5	FC/MC/PC43B	990	28.8	21.4	15.00	12.50
	T*(8,L)V*C16	21.0	FC/MC/PC43C	990	29.0	21.6	15.00	12.50
	T*(8,L)V*C20	21.0	FC/MC/PC43C	1000	29.0	21.6	15.00	12.50
	T*(8,L)X*A12	14.5	FC/MC/PC37A	1095	29.4	23.0	15.00	12.50
	T*(8,L)X*B12	17.5	FC/MC/PC43B	1105	29.6	23.2	15.00	12.50
	T*(8,L)X*C16	21.0	FC/MC/PC43C	955	29.2	21.6	15.00	12.50
	T*9(C,V)*B12	17.5	FC/MC/PC43B	1035	29.0	22.0	14.50	12.00
	T*9(C,V)*C16	21.0	FC/MC/PC43C	1030	29.2	22.2	15.00	12.50
	T*9(C,V)*C20	21.0	FC/MC/PC43C	995	29.0	21.6	15.00	12.50

For notes, see Page 10.

COOLING CAPACITY - With High Efficiency Motor Furnaces (Continued)

UNIT MODEL	FURNACE		COIL[1] MODEL	COOLING				
	MODEL	WIDTH		RATED CFM	NET MBH TOTAL	NET MBH SENS.	SEER	EER
14.5 SEER HP WITH HIGH EFFICIENCY MOTOR FURNACES[2]								
THGF30S41S3	T*9X*B12	17.5	FC/MC/PC43B	1095	29.4	23.0	15.00	12.50
	T*9X*C16	21.0	FC/MC/PC43C	1055	29.4	22.6	15.00	12.50
	Y*(8,L)C*A12	14.5	FC/MC/PC37A	980	28.6	21.4	14.50	12.00
	Y*(8,L)C*B12	17.5	FC/MC/PC43B	990	28.8	21.4	15.00	12.50
	Y*(8,L)C*C16	21.0	FC/MC/PC43C	990	29.0	21.6	15.00	12.50
	Y*(8,L)C*C20	21.0	FC/MC/PC43C	1000	29.0	21.6	15.00	12.50
	Y*9C*B12	17.5	FC/MC/PC43B	1035	29.0	22.0	14.50	12.00
	Y*9C*C16	21.0	FC/MC/PC43C	1030	29.2	22.2	15.00	12.50
	Y*9C*C20	21.0	FC/MC/PC43C	995	29.0	21.6	15.00	12.50
THGF36S41S4	T*(8,L)V*B12	17.5	FC/MC/PC43B	1275	36.0	26.6	13.50	11.35
	T*(8,L)V*C16	21.0	FC/MC/PC43C	1190	36.0	26.2	14.50	12.00
	T*(8,L)V*C16	21.0	FC/MC/PC48C	1195	36.0	26.4	14.50	12.00
	T*(8,L)V*C16	21.0	FC/PC60C	1185	36.0	26.8	14.50	12.00
	T*(8,L)V*C16	21.0	UC48C	1210	36.0	26.6	15.00	12.50
	T*(8,L)V*C16	21.0	UC60C	1195	36.0	26.2	15.00	12.50
	T*(8,L)V*C20	21.0	FC/MC/PC43C	1190	36.0	26.2	14.50	12.00
	T*(8,L)V*C20	21.0	FC/MC/PC48C	1150	36.0	26.4	14.50	12.00
	T*(8,L)V*C20	21.0	FC/PC60C	1215	36.0	26.8	14.50	12.00
	T*(8,L)V*C20	21.0	UC48C	1155	36.0	26.6	15.00	12.50
	T*(8,L)V*C20	21.0	UC60C	1215	36.0	26.2	15.00	12.50
	T*(8,L)X*A12	14.5	FC/MC/PC37A	1290	36.0	27.2	14.00	12.00
	T*(8,L)X*B12	17.5	FC/MC/PC43B	1300	36.0	27.4	14.50	12.00
	T*(8,L)X*C16	21.0	FC/MC/PC43C	1175	36.0	26.4	14.50	12.00
	T*(8,L)X*C16	21.0	FC/MC/PC48C	1185	36.0	26.6	15.00	12.50
	T*(8,L)X*C16	21.0	FC/PC60C	1190	36.0	27.0	15.00	12.50
	T*(8,L)X*C16	21.0	UC48C	1185	36.0	26.8	15.00	12.50
	T*(8,L)X*C16	21.0	UC60C	1190	36.0	26.4	15.00	12.50
	T*(8,L)X*C20	21.0	FC/MC/PC43C	1250	36.0	26.2	14.50	12.00
	T*(8,L)X*C20	21.0	FC/MC/PC48C	1270	36.0	27.6	15.00	12.50
	T*(8,L)X*C20	21.0	FC/PC60C	1275	36.0	27.8	15.00	12.50
	T*(8,L)X*C20	21.0	UC48C	1270	36.0	27.8	15.00	12.50
	T*(8,L)X*C20	21.0	UC60C	1275	36.0	27.4	15.00	12.50
	T*9(C,V)*B12	17.5	FC/MC/PC43B	1200	36.0	25.8	13.75	11.50
	T*9(C,V)*C16	21.0	FC/MC/PC43C	1240	36.0	26.0	14.00	12.00
	T*9(C,V)*C16	21.0	FC/MC/PC48C	1195	36.0	26.4	14.50	12.00
	T*9(C,V)*C16	21.0	FC/PC60C	1235	36.0	26.6	14.00	12.00
	T*9(C,V)*C16	21.0	UC48C	1195	36.0	26.4	14.50	12.00
	T*9(C,V)*C16	21.0	UC60C	1235	36.0	26.0	14.00	12.00
	T*9(C,V)*C20	21.0	FC/MC/PC43C	1200	36.0	26.2	14.00	12.00
	T*9(C,V)*C20	21.0	FC/MC/PC48C	1330	36.0	27.8	14.00	12.00
	T*9(C,V)*C20	21.0	FC/PC60C	1330	36.0	28.0	14.50	12.00
	T*9(C,V)*C20	21.0	UC48C	1330	36.0	28.0	14.50	12.00
	T*9(C,V)*C20	21.0	UC60C	1330	36.0	27.6	14.50	12.00
	T*9(C,V)*D20	24.5	FC/MC/PC48D	1240	36.0	26.4	14.50	12.00
	T*9(C,V)*D20	24.5	FC/MC/PC60D	1225	36.0	26.6	14.50	12.00
	T*9(C,V)*D20	24.5	UC48D	1240	36.0	26.6	15.00	12.50
	T*9(C,V)*D20	24.5	UC60D	1225	36.0	26.2	14.50	12.00
	T*9X*B12	17.5	FC/MC/PC43B	1270	36.0	27.0	14.00	12.00
	T*9X*C16	21.0	FC/MC/PC43C	1260	36.0	26.8	14.50	12.00
	T*9X*C16	21.0	FC/MC/PC48C	1280	36.0	27.4	14.50	12.00
	T*9X*C16	21.0	FC/PC60C	1315	36.0	28.2	14.50	12.00
	T*9X*C16	21.0	UC48C	1280	36.0	27.6	15.00	12.50
	T*9X*C16	21.0	UC60C	1315	36.0	27.6	15.00	12.50
	T*9X*C20	21.0	FC/MC/PC43C	1185	36.0	26.2	14.50	12.00
	T*9X*C20	21.0	FC/MC/PC48C	1205	36.0	26.4	14.50	12.00
	T*9X*C20	21.0	FC/PC60C	1240	36.0	26.8	14.50	12.00

For notes, see Page 10.

COOLING CAPACITY - With High Efficiency Motor Furnaces (Continued)

UNIT MODEL	FURNACE		COIL[1] MODEL	COOLING				
	MODEL	WIDTH		RATED CFM	NET MBH		SEER	EER
					TOTAL	SENS.		
14.5 SEER HP WITH HIGH EFFICIENCY MOTOR FURNACES[2]								
THGF36S41S4	T*9X*C20	21.0	UC48C	1205	36.0	26.6	15.00	12.50
	T*9X*C20	21.0	UC60C	1240	36.0	26.2	15.00	12.50
	T*9X*D20	24.5	FC/MC/PC48D	1240	36.0	26.6	14.50	12.00
	T*9X*D20	24.5	FC/MC/PC60D	1310	36.0	28.2	15.00	12.50
	T*9X*D20	24.5	UC48D	1240	36.0	26.6	15.00	12.50
	T*9X*D20	24.5	UC60D	1310	36.0	27.8	15.00	12.50
	Y*(8,L)C*A12	14.5	FC/MC/PC37A	1150	36.0	25.8	13.75	11.50
	Y*(8,L)C*B12	17.5	FC/MC/PC43B	1275	36.0	26.6	13.50	11.50
	Y*(8,L)C*C16	21.0	FC/MC/PC43C	1190	36.0	26.2	14.50	12.00
	Y*(8,L)C*C16	21.0	FC/MC/PC48C	1195	36.0	26.4	14.50	12.00
	Y*(8,L)C*C16	21.0	FC/PC60C	1185	36.0	26.8	14.50	12.00
	Y*(8,L)C*C16	21.0	UC48C	1210	36.0	26.6	15.00	12.50
	Y*(8,L)C*C16	21.0	UC60C	1195	36.0	26.2	15.00	12.50
	Y*(8,L)C*C20	21.0	FC/MC/PC43C	1190	36.0	26.2	14.50	12.00
	Y*(8,L)C*C20	21.0	FC/MC/PC48C	1150	36.0	26.4	14.50	12.00
	Y*(8,L)C*C20	21.0	FC/PC60C	1215	36.0	26.8	14.50	12.00
	Y*(8,L)C*C20	21.0	UC48C	1155	36.0	26.6	15.00	12.50
	Y*(8,L)C*C20	21.0	UC60C	1215	36.0	26.2	15.00	12.50
	Y*9C*B12	17.5	FC/MC/PC43B	1200	36.0	25.8	13.50	11.50
	Y*9C*C16	21.0	FC/MC/PC43C	1240	36.0	26.0	14.00	12.00
	Y*9C*C16	21.0	FC/MC/PC48C	1195	36.0	26.4	14.50	12.00
	Y*9C*C16	21.0	FC/PC60C	1235	36.0	26.6	14.00	12.00
	Y*9C*C16	21.0	UC48C	1195	36.0	26.4	14.50	12.00
	Y*9C*C16	21.0	UC60C	1235	36.0	26.0	14.00	12.00
	Y*9C*C20	21.0	FC/MC/PC43C	1200	36.0	26.2	14.00	12.00
	Y*9C*C20	21.0	FC/MC/PC48C	1330	36.0	27.8	14.00	12.00
	Y*9C*C20	21.0	FC/PC60C	1330	36.0	28.0	14.50	12.00
	Y*9C*C20	21.0	UC48C	1330	36.0	28.0	14.50	12.00
	Y*9C*C20	21.0	UC60C	1330	36.0	27.6	14.50	12.00
	Y*9C*D20	24.5	FC/MC/PC48D	1240	36.0	26.4	14.50	12.00
	Y*9C*D20	24.5	FC/MC/PC60D	1225	36.0	26.6	14.50	12.00
	Y*9C*D20	24.5	UC48D	1240	36.0	26.6	15.00	12.50
	Y*9C*D20	24.5	UC60D	1225	36.0	26.2	14.50	12.00
THGF42S41S3	T*(8,L)V*C16	21.0	FC/MC/PC48C	1330	39.5	29.2	14.50	12.00
	T*(8,L)V*C16	21.0	FC/MC62D	1420	40.5	31.0	14.50	12.00
	T*(8,L)V*C16	21.0	FC/PC60C	1420	40.0	30.0	14.50	12.00
	T*(8,L)V*C20	21.0	FC/MC/PC48C	1410	40.0	29.8	14.50	12.00
	T*(8,L)V*C20	21.0	FC/MC62D	1410	40.5	31.2	15.00	12.50
	T*(8,L)V*C20	21.0	FC/PC60C	1340	40.5	30.2	14.50	12.00
	T*(8,L)X*C16	21.0	FC/MC/PC48C	1360	40.5	30.2	15.00	12.50
	T*(8,L)X*C16	21.0	FC/MC62D	1360	41.0	31.2	15.00	12.50
	T*(8,L)X*C16	21.0	FC/PC60C	1360	40.5	30.4	15.00	12.50
	T*(8,L)X*C20	21.0	FC/MC/PC48C	1475	41.0	31.0	15.00	12.50
	T*(8,L)X*C20	21.0	FC/MC62D	1485	41.0	32.2	15.00	12.50
	T*(8,L)X*C20	21.0	FC/PC60C	1485	41.0	31.4	15.00	12.50
	T*9(C,V)*C16	21.0	FC/MC/PC48C	1395	40.0	29.8	14.50	12.00
	T*9(C,V)*C16	21.0	FC/MC62D	1445	40.0	30.8	14.00	11.50
	T*9(C,V)*C16	21.0	FC/PC60C	1445	40.0	29.8	14.00	11.75
	T*9(C,V)*C20	21.0	FC/MC/PC48C	1430	40.0	29.6	14.00	11.75
	T*9(C,V)*C20	21.0	FC/MC62D	1445	40.5	30.8	14.50	12.00
	T*9(C,V)*C20	21.0	FC/PC60C	1445	40.0	30.0	14.00	12.00
	T*9(C,V)*D20	24.5	FC/MC/PC48D	1450	40.0	29.8	14.50	12.00
	T*9(C,V)*D20	24.5	FC/MC/PC60D	1445	40.0	30.0	14.50	12.00
	T*9(C,V)*D20	24.5	FC/MC62D	1455	40.5	31.0	14.50	12.00
	T*9X*C16	21.0	FC/MC/PC48C	1425	40.5	29.8	14.50	12.00
	T*9X*C16	21.0	FC/MC62D	1460	40.5	31.0	14.50	12.00

For notes, see Page 10.

COOLING CAPACITY - With High Efficiency Motor Furnaces (Continued)

UNIT MODEL	FURNACE		COIL[1] MODEL	COOLING				
	MODEL	WIDTH		RATED CFM	NET MBH		SEER	EER
					TOTAL	SENS.		
14.5 SEER HP WITH HIGH EFFICIENCY MOTOR FURNACES[2]								
THGF42S41S3	T*9X*C16	21.0	FC/PC60C	1460	40.5	30.2	14.50	12.00
	T*9X*C20	21.0	FC/MC/PC48C	1420	40.5	30.0	15.00	12.50
	T*9X*C20	21.0	FC/MC62D	1460	40.5	31.2	15.00	12.50
	T*9X*C20	21.0	FC/PC60C	1460	40.5	30.2	15.00	12.50
	T*9X*D20	24.5	FC/MC/PC48D	1435	40.5	30.0	15.00	12.50
	T*9X*D20	24.5	FC/MC/PC60D	1515	41.5	31.8	15.00	12.50
	T*9X*D20	24.5	FC/MC62D	1425	40.5	31.2	15.00	12.50
	Y*(8,L)C*C16	21.0	FC/MC/PC48C	1330	39.5	29.2	14.50	12.00
	Y*(8,L)C*C16	21.0	FC/MC62D	1420	40.5	31.0	14.50	12.00
	Y*(8,L)C*C16	21.0	FC/PC60C	1420	40.0	30.0	14.50	12.00
	Y*(8,L)C*C20	21.0	FC/MC/PC48C	1410	40.0	29.8	14.50	12.00
	Y*(8,L)C*C20	21.0	FC/MC62D	1410	40.5	31.2	15.00	12.50
	Y*(8,L)C*C20	21.0	FC/PC60C	1340	40.5	30.2	14.50	12.00
	Y*9C*C16	21.0	FC/MC/PC48C	1395	40.0	29.8	14.50	12.00
	Y*9C*C16	21.0	FC/MC62D	1445	40.0	30.8	14.00	11.50
	Y*9C*C16	21.0	FC/PC60C	1445	40.0	29.8	14.00	11.75
	Y*9C*C20	21.0	FC/MC/PC48C	1430	40.0	29.6	14.00	11.75
	Y*9C*C20	21.0	FC/MC62D	1445	40.5	30.8	14.50	12.00
	Y*9C*C20	21.0	FC/PC60C	1445	40.0	30.0	14.00	12.00
	Y*9C*D20	24.5	FC/MC/PC48D	1450	40.0	29.8	14.50	12.00
	Y*9C*D20	24.5	FC/MC/PC60D	1445	40.0	30.0	14.50	12.00
	Y*9C*D20	24.5	FC/MC62D	1455	40.5	31.0	14.50	12.00
THGF48S41S3	T*(8,L)V*C16	21.0	FC/MC62D	1635	48.0	36.0	14.50	12.00
	T*(8,L)V*C16	21.0	FC64D	1635	48.0	36.2	14.50	12.00
	T*(8,L)V*C20	21.0	FC/MC62D	1615	48.0	36.0	14.50	12.00
	T*(8,L)V*C20	21.0	FC64D	1615	48.0	36.2	14.50	12.00
	T*(8,L)X*C16	21.0	FC/MC62D	1610	48.0	36.2	14.50	12.00
	T*(8,L)X*C16	21.0	FC64D	1610	48.0	36.2	15.00	12.50
	T*(8,L)X*C20	21.0	FC/MC62D	1665	48.0	36.2	14.50	12.00
	T*(8,L)X*C20	21.0	FC64D	1665	48.0	36.2	15.00	12.50
	T*9(C,V)*C16	21.0	FC/MC62D	1590	47.5	36.0	14.35	12.00
	T*9(C,V)*C16	21.0	FC64D	1590	48.0	36.2	14.50	12.00
	T*9(C,V)*C20	21.0	FC/MC62D	1655	47.5	35.8	14.05	12.00
	T*9(C,V)*C20	21.0	FC64D	1655	48.0	36.2	14.25	12.00
	T*9(C,V)*D20	24.5	FC/MC62D	1630	47.5	35.8	14.25	12.00
	T*9(C,V)*D20	24.5	FC64D	1630	48.0	36.2	14.50	12.00
	T*9X*C16	21.0	FC/MC62D	1550	48.0	36.0	14.50	12.00
	T*9X*C16	21.0	FC64D	1550	48.0	36.2	15.00	12.50
	T*9X*C20	21.0	FC/MC62D	1595	48.0	36.2	14.50	12.00
	T*9X*C20	21.0	FC64D	1595	48.0	36.2	15.00	12.50
	T*9X*D20	24.5	FC/MC62D	1610	48.0	36.0	14.50	12.00
	T*9X*D20	24.5	FC64D	1610	48.0	36.2	14.50	12.00
	Y*(8,L)C*C16	21.0	FC/MC62D	1635	48.0	36.0	14.50	12.00
	Y*(8,L)C*C16	21.0	FC64D	1635	48.0	36.2	14.50	12.00
	Y*(8,L)C*C20	21.0	FC/MC62D	1615	48.0	36.0	14.50	12.00
	Y*(8,L)C*C20	21.0	FC64D	1615	48.0	36.2	14.50	12.00
	Y*9C*C16	21.0	FC/MC62D	1590	47.5	36.0	14.35	12.00
	Y*9C*C16	21.0	FC64D	1590	48.0	36.2	14.50	12.00
	Y*9C*C20	21.0	FC/MC62D	1655	47.5	35.8	14.05	12.00
	Y*9C*C20	21.0	FC64D	1655	48.0	36.2	14.25	12.00
	Y*9C*D20	24.5	FC/MC62D	1630	47.5	35.8	14.25	12.00
	Y*9C*D20	24.5	FC64D	1630	48.0	36.2	14.50	12.00

1. MC coils available with a factory installed horizontal drain pan. See price pages for specific model number.
2. High Efficiency Motor Furnaces have B.O.D (Blower on Delay) standard.

PSC furnaces, such as the TG8S, TGLS ,TG9S, use Coil Only Ratings.

COOLING CAPACITY - With High Efficiency Motor Furnaces

UNIT MODEL	FURNACE		COIL[1] MODEL	STAGE	COOLING				
	MODEL	WIDTH			RATED CFM	NET MBH		SEER	EER
						TOTAL	SENS.		
14.5 SEER HP WITH HIGH EFFICIENCY MOTOR FURNACES[2]									
THGF60S41S3	T*(8,L)V*C20	21.0	FC/MC62D	1	1015	46.0	29.2	14.50	12.00
				2	1615	56.5	38.5		
	T*(8,L)V*C20	21.0	FC64D	1	1015	48.5	30.6	15.00	12.50
				2	1615	58.0	40.0		
	T*(8,L)X*C20	21.0	FC/MC62D	1	835	44.0	27.0	14.50	12.00
				2	1665	57.0	39.5		
	T*(8,L)X*C20	21.0	FC64D	1	835	46.5	28.2	15.00	12.50
				2	1665	58.5	41.0		
	T*9(C,V)*C20	21.0	FC/MC62D	1	1040	46.5	29.4	14.50	12.00
				2	1655	56.0	38.5		
	T*9(C,V)*C20	21.0	FC64D	1	1040	49.0	30.8	15.00	12.25
				2	1655	57.5	40.0		
	T*9(C,V)*D20	24.5	FC/MC62D	1	1085	47.0	29.8	14.50	12.00
				2	1630	56.0	38.5		
	T*9(C,V)*D20	24.5	FC64D	1	1085	49.0	31.4	15.00	12.50
				2	1630	57.5	40.0		
	T*9X*C20	21.0	FC/MC62D	1	1220	48.5	31.6	14.50	12.00
				2	1595	56.5	38.5		
	T*9X*C20	21.0	FC64D	1	1220	50.5	33.2	15.00	12.50
				2	1595	58.0	40.0		
	T*9X*D20	24.5	FC/MC62D	1	1240	48.5	31.8	14.50	12.00
				2	1645	56.5	39.0		
	T*9X*D20	24.5	FC64D	1	1240	50.5	33.4	15.00	12.50
				2	1645	58.5	40.5		
	Y*(8,L)C*C20	21.0	FC/MC62D	1	1015	46.0	29.2	14.50	12.00
				2	1615	56.5	38.5		
	Y*(8,L)C*C20	21.0	FC64D	1	1015	48.5	30.6	15.00	12.50
				2	1615	58.0	40.0		
	Y*9C*C20	21.0	FC/MC62D	1	1040	46.5	29.4	14.50	12.00
				2	1655	56.0	38.5		
	Y*9C*C20	21.0	FC64D	1	1040	49.0	30.8	15.00	12.25
				2	1655	57.5	40.0		
	Y*9C*D20	24.5	FC/MC62D	1	1085	47.0	29.8	14.50	12.00
				2	1630	56.0	38.5		
	Y*9C*D20	24.5	FC64D	1	1085	49.0	31.4	15.00	12.50
				2	1630	57.5	40.0		

1. MC coils available with a factory installed horizontal drain pan. See price pages for specific model number.
2. High Efficiency Motor Furnaces have B.O.D (Blower on Delay) standard.

PSC furnaces, such as the TG8S, TGLS ,TG9S, use Coil Only Ratings.

HEATING CAPACITY - With Air Handler Coils

UNIT MODEL*	AIR HANDLER	COIL[1] MODEL	HEATING[2]						
			47°F			17°F			HSPF
			MBH	COP	KW	MBH	COP	KW	STD
14.5 SEER HP WITH AIR HANDLERS									
THGF18S41S3	AHE24B	–	18.0	3.82	1.38	11.0	2.50	1.29	8.20
	AHE30B	–	18.0	3.88	1.36	10.9	2.54	1.26	8.50
	AHR24B	–	18.0	3.56	1.52	11.4	2.34	1.43	7.75
	AHV24B	–	18.0	3.76	1.40	10.9	2.50	1.28	8.50
	AHV30B	–	18.0	3.92	1.35	11.0	2.54	1.27	8.50
	AHV36C	–	18.0	4.00	1.32	11.0	2.60	1.24	8.50
	AV*36	–	18.0	3.98	1.33	10.8	2.62	1.21	8.50
	MV12B	FC/MC35B	18.0	3.76	1.40	11.0	2.48	1.30	8.50
	MV12B	FC/MC43B	18.0	3.90	1.35	10.9	2.56	1.25	8.50
	MX12B	FC/MC35B	18.0	3.96	1.33	10.9	2.56	1.25	8.50
	MX12B	FC/MC43B	18.0	3.96	1.33	10.9	2.60	1.23	8.50
THGF24S41S3	AHE24B	–	22.2	3.68	1.77	13.7	2.44	1.65	8.50
	AHE30B	–	22.2	3.68	1.77	13.7	2.44	1.65	8.50
	AHR24B	–	22.4	3.42	1.92	13.9	2.30	1.77	7.75
	AHV24B	–	22.2	3.58	1.82	13.7	2.40	1.67	8.50
	AHV30B	–	22.2	3.64	1.79	13.7	2.42	1.66	8.50
	AHV36C	–	22.2	3.76	1.73	13.6	2.50	1.59	8.50
	AV*36	–	22.0	3.70	1.74	14.8	2.50	1.73	8.50
	MV12B	FC/MC35B	22.2	3.68	1.77	14.9	2.46	1.77	8.50
	MV12B	FC/MC43B	22.2	3.82	1.70	14.9	2.54	1.72	8.50
	MX12B	FC/MC35B	22.0	3.72	1.73	13.6	2.46	1.62	8.50
	MX12B	FC/MC43B	22.0	3.70	1.74	13.5	2.48	1.59	8.50
THGF30S41S3	AHE36C	–	30.0	4.08	2.15	20.4	2.62	2.28	9.00
	AHR36B	–	30.0	3.76	2.42	19.4	2.50	2.27	7.75
	AHV36C	–	30.0	3.76	2.34	18.8	2.40	2.30	9.00
	AV*36	–	29.8	3.98	2.19	18.6	2.74	1.99	9.00
	MV12B	FC/MC43B	30.0	3.88	2.27	18.8	2.68	2.06	9.00
	MV16C	FC/MC43C	30.0	3.92	2.24	18.8	2.70	2.04	9.00
	MX12B	FC/MC43B	30.0	4.10	2.14	20.6	2.60	2.32	9.00
	MX16C	FC/MC43C	30.0	4.04	2.18	20.4	2.60	2.30	9.00
THGF36S41S4	AHE36C	–	35.0	3.88	2.64	20.4	2.84	2.10	9.00
	AHE42D	–	34.6	3.80	2.67	20.2	2.80	2.11	9.00
	AHE48D	–	34.4	3.82	2.64	20.2	2.82	2.10	9.00
	AHR36B	–	35.6	3.60	2.90	21.2	2.62	2.37	8.00
	AHR42C	–	35.4	3.64	2.85	21.2	2.64	2.35	8.00
	AHV36C	–	36.0	3.62	2.91	24.6	2.50	2.88	8.20
	AHV42D	–	36.0	3.68	2.87	24.4	2.54	2.81	8.50
	AHV48D	–	36.0	3.66	2.88	24.0	2.52	2.79	8.50
	AV*36	–	34.8	3.80	2.68	20.4	2.78	2.15	8.50
	AV*48	–	35.2	3.98	2.59	20.8	2.90	2.10	9.00
	MV12B	FC/MC43B	35.0	3.76	2.73	20.6	2.74	2.20	8.20
	MV12D	FC/MC48D	34.4	3.86	2.61	20.2	2.84	2.08	9.00
	MV12D	FC/MC60D	35.0	3.90	2.63	20.6	2.86	2.11	8.50
	MV16C	FC/MC43C	35.0	3.80	2.70	20.4	2.78	2.15	8.20
	MV16C	FC/MC48C	34.6	3.80	2.67	20.4	2.80	2.13	8.50
	MV16C	FC60C	35.4	3.96	2.62	20.8	2.86	2.13	9.00
	MX12B	FC/MC43B	35.2	3.74	2.76	20.6	2.74	2.20	8.20
	MX12D	FC/MC48D	34.6	3.80	2.67	20.4	2.80	2.13	8.20
	MX12D	FC/MC60D	35.6	4.00	2.61	20.8	2.88	2.12	9.00
	MX16C	FC/MC43C	34.2	3.80	2.64	19.9	2.80	2.08	8.20
	MX16C	FC/MC48C	34.4	3.86	2.61	20.2	2.84	2.08	9.00
	MX16C	FC60C	35.0	3.98	2.58	20.6	2.90	2.08	9.00
THGF42S41S3	AHE42D	–	38.0	3.82	2.91	26.0	2.66	2.86	9.00
	AHE48D	–	38.0	3.82	2.91	26.0	2.66	2.86	9.00
	AHE60D	–	38.5	3.90	2.89	25.4	2.64	2.82	9.00
	AHR42C	–	41.0	3.86	3.11	27.2	2.60	3.07	7.75

For notes, see Page 13.

HEATING CAPACITY - With Air Handler Coils (Continued)

UNIT MODEL*	AIR HANDLER	COIL[1] MODEL	HEATING[2]						
			47°F			17°F			HSPF
			MBH	COP	KW	MBH	COP	KW	STD
14.5 SEER HP WITH AIR HANDLERS									
THGF42S41S3	AHR48D	–	40.5	3.72	3.19	27.0	2.52	3.14	7.75
	AHR60D	–	41.0	3.86	3.11	27.2	2.60	3.07	7.75
	AHV48D	–	39.0	3.74	3.06	25.8	2.52	3.00	8.20
	AHV60D	–	39.0	3.84	2.98	26.0	2.60	2.93	8.20
	MV16C	FC/MC48C	38.5	3.78	2.98	26.2	2.64	2.91	8.20
	MV16C	FC60C	39.0	3.96	2.89	28.8	2.94	2.87	8.20
	MV20D	FC/MC48D	38.5	3.88	2.91	26.2	2.68	2.86	9.00
	MV20D	FC/MC60D	38.5	4.00	2.82	28.6	2.96	2.83	9.00
	MV20D	FC/MC62D	38.5	3.90	2.89	25.6	2.64	2.84	9.00
	MX16C	FC/MC48C	38.0	3.86	2.88	26.0	2.68	2.84	9.00
	MX16C	FC60C	38.5	4.02	2.81	28.6	2.98	2.81	9.00
	MX20D	FC/MC48D	38.5	3.86	2.88	26.0	2.68	2.84	9.00
	MX20D	FC/MC60D	38.5	4.10	2.75	28.6	3.04	2.76	9.00
	MX20D	FC/MC62D	38.5	3.98	2.83	25.6	2.68	2.80	9.00
THGF48S41S3	AHE60D	–	47.0	3.80	3.62	32.2	2.62	3.60	9.00
	AHR60D	–	48.0	3.70	4.08	33.0	2.54	3.81	7.75
	AHV60D	–	48.0	3.74	3.76	32.6	2.58	3.70	9.00
	MV20D	FC/MC62D	48.0	3.82	3.68	31.8	2.60	3.58	9.00
	MV20D	FC64D	48.0	3.86	3.64	32.2	2.66	3.55	9.00
	MX20D	FC/MC62D	47.0	3.88	3.55	32.0	2.66	3.52	9.00
	MX20D	FC64D	47.0	3.98	3.46	32.4	2.74	3.46	9.00

1. Rated CFM same as for cooling.
2. Heating MBH based on AHRI standards of 70 °F DB (Dry Bulb) entering indoor air, 72% RH (Relative Humidity) outdoor air with 25 feet of interconnecting piping and no supplemental electric heat operation.

COP equals MBH output divided by (total KW input x 3.412).
HSPF (Heating Seasonal Performance Factor) is the total heating output during a normal annual usage period for heating divided by the total electric power input during the same period.
— = Not Applicable.
MA Modular Air Handlers use Coil Only Ratings.

HEATING CAPACITY - With Air Handler Coils

UNIT MODEL	AIR HANDLER	COIL[1] MODEL	HEATING[2]					
			STAGE	RATED CFM	NET MBH		HSPF	COP @ 47
					47 OD	17 OD		
14.5 SEER HP WITH AIR HANDLERS								
THGF60S41S3	AHE60D	–	1	1160	43.0	–	–	3.36
			2	1835	58.0	40.0	9.00	3.70
			2*	1160	55.0	39.5	8.85	3.00
	AHV60D	–	1	1090	44.0	–	–	3.24
			2	1635	63.5	40.5	9.65	3.60
			2*	1090	61.0	39.5	9.40	3.40
	MV20D	FC/MC62D	1	1160	43.0	–	–	3.44
			2	1855	57.0	40.5	9.00	3.66
			2*	1160	54.9	39.0	8.85	3.04
	MV20D	FC64D	1	1160	43.0	–	–	3.44
			2	1855	60.0	40.5	9.00	3.76
			2*	1160	58.0	39.0	8.90	3.12
	MX20D	FC/MC62D	1	1390	44.0	–	–	3.50
			2	1795	58.0	39.5	9.00	3.72
			2*	1390	55.5	39.0	8.60	3.22
	MX20D	FC64D	1	1390	44.5	–	–	3.62
			2	1795	58.0	40.0	9.00	3.82
			2*	1390	55.5	39.5	8.60	3.30

1. Rated CFM same as for cooling.
2. Heating MBH based on AHRI standards of 70 °F DB (Dry Bulb) entering indoor air, 72% RH (Relative Humidity) outdoor air with 25 feet of interconnecting piping and no supplemental electric heat operation.

* Notates “Hot Heat Pump” performance. These ratings are not AHRI Listed.
COP equals MBH output divided by (total KW input x 3.412).
HSPF (Heating Seasonal Performance Factor) is the total heating output during a normal annual usage period for heating divided by the total electric power input during the same period.
— = Not Applicable.
MA Modular Air Handlers use Coil Only Ratings.

HEATING CAPACITY - Upflow, Downflow, and Horizontal Furnaces and Coils (Coil Only Ratings)

UNIT MODEL*	COIL[1] MODEL	HEATING[2]						
		47 °F			17 °F			HSPF
		MBH	COP	KW	MBH	COP	KW	STD
14.5 SEER HP COIL ONLY RATINGS								
THGF18S41S3	FC/MC/PC32	18.0	3.56	1.52	11.4	2.34	1.43	7.75
	FC/MC/PC35	18.0	3.52	1.56	11.3	2.34	1.45	7.70
	FC/MC/PC37	18.0	3.62	1.50	11.3	2.40	1.38	7.75
	FC/MC/PC43	18.0	3.62	1.50	11.3	2.40	1.38	7.75
THGF24S41S3	FC/MC/PC32	22.8	3.40	1.96	14.2	2.26	1.84	7.75
	FC/MC/PC35	22.6	3.38	1.99	15.4	2.26	1.86	7.70
	FC/MC/PC37	22.8	3.40	1.96	14.2	2.26	1.84	7.75
	FC/MC/PC43	22.8	3.40	1.96	14.2	2.26	1.84	7.75
THGF30S41S3	FC/MC/PC37	30.0	3.72	2.43	19.3	2.48	2.28	8.00
	FC/MC/PC43	30.0	3.70	2.43	19.4	2.58	2.22	8.00
THGF36S41S4	FC/MC/PC37	35.6	3.60	2.90	21.2	2.62	2.37	8.00
	FC/MC/PC43	35.6	3.60	2.90	21.2	2.62	2.37	8.00
	FC/MC/PC48	35.4	3.58	2.90	21.2	2.62	2.37	8.00
	FC/MC/PC60	36.0	3.72	2.84	21.6	2.68	2.36	8.00
	UC48	36.0	3.70	2.85	21.4	2.66	2.36	8.00
	UC60	36.0	3.68	2.87	20.8	2.60	2.34	8.00
THGF42S41S3	FC/MC/PC48	39.0	3.64	3.14	26.8	2.54	3.09	8.20
	FC/MC/PC60	39.5	3.78	3.06	29.4	2.82	3.05	8.20
	FC/MC62	39.0	3.74	3.09	25.0	2.44	3.05	8.00
THGF48S41S3	FC/MC62	48.0	3.66	4.12	32.6	2.50	3.86	8.00

1. Rated CFM same as for cooling.
2. Heating MBH based on AHRI standards of 70 °F DB (Dry Bulb) entering indoor air, 72% RH (Relative Humidity) outdoor air with 25 feet of interconnecting piping and no supplemental electric heat operation.

COP equals MBH output divided by (total KW input x 3.412).

HSPF (Heating Seasonal Performance Factor) is the total heating output during a normal annual usage period for heating divided by the total electric power input during the same period.

MA Modular Air Handlers use Coil Only Ratings.

PSC furnaces, such as the TG8S, TGLS ,TG9S, use Coil Only Ratings.

— = Not Applicable.

HEATING CAPACITY - With Upflow, Downflow, & Horizontal Furnaces and Coils (Coil Only Ratings)

UNIT MODEL*	COIL[1] MODEL	HEATING[2]					
		STAGE	RATED CFM	NET MBH		HSPF	COP @ 47
				47 OD	17 OD		
14.5 SEER HP COIL ONLY RATINGS							
THGF60S41S3	FC/MC62	1	1350	43.5	–	–	3.42
		2	1800	60	40.5	8.4	3.58
		2*	1350	57	40.0	8.6	3.36

1. Rated CFM same as for cooling.
2. Heating MBH based on AHRI standards of 70° DB (Dry Bulb) entering indoor air, 72% RH (Relative Humidity) outdoor air with 25 feet of interconnecting piping and no supplemental electric heat operation.

* Notates “Hot Heat Pump” performance. These ratings are not AHRI Listed.

COP equals MBH output divided by (total KW input x 3.412).

HSPF (Heating Seasonal Performance Factor) is the total heating output during a normal annual usage period for heating divided by the total electric power input during the same period.

MA Modular Air Handlers use Coil Only Ratings.

PSC furnaces, such as the TG8S, TGLS, and TG9S, use Coil Only Ratings.

— = Not Applicable.

HEATING CAPACITY - With High Efficiency Motor Furnaces

MODEL	FURNACE MODEL	COIL[1] MODEL	HEATING[2]						
			47°F			17°F			HSPF
			MBH	COP	KW	MBH	COP	KW	STD
14.5 SEER HP WITH HIGH EFFICIENCY MOTOR FURNACES[3]									
THGF18S41S3	T*(8,L)V*A12	FC/MC/PC32A	18.0	3.76	1.40	11.0	2.48	1.30	8.50
	T*(8,L)V*A12	FC/MC/PC37A	18.0	3.90	1.35	10.9	2.58	1.24	8.50
	T*(8,L)V*B12	FC/MC/PC35B	18.0	3.84	1.37	10.9	2.50	1.28	8.50
	T*(8,L)V*B12	FC/MC/PC43B	18.0	3.80	1.39	10.8	2.52	1.26	8.50
	T*(8,L)V*C16	FC/MC/PC35C	18.0	3.82	1.38	10.9	2.52	1.27	8.50
	T*(8,L)X*A12	FC/MC/PC32A	17.9	3.84	1.37	10.8	2.54	1.25	9.00
	T*(8,L)X*B12	FC/MC/PC35B	18.0	3.90	1.35	10.8	2.54	1.25	9.00
	T*(8,L)X*C16	FC/MC/PC35C	18.0	3.82	1.38	10.9	2.50	1.28	8.50
	T*(8,L)X*A12	FC/MC/PC37A	18.0	4.04	1.31	10.8	2.64	1.20	9.00
	T*(8,L)X*B12	FC/MC/PC43B	18.0	4.06	1.31	10.8	2.64	1.20	9.00
	T*9V*A10	FC/MC/PC32A	17.9	3.74	1.43	11.1	2.46	1.32	8.20
	T*9V*A10	FC/MC/PC37A	18.0	3.76	1.42	11.0	2.50	1.29	8.25
	T*9(C,V)*B12	FC/MC/PC35B	18.0	3.80	1.39	10.9	2.50	1.28	8.50
	T*9(C,V)*C16	FC/MC/PC35C	18.0	3.84	1.37	10.9	2.50	1.28	8.50
	T*9X*A10	FC/MC/PC32A	17.8	3.76	1.41	11.0	2.48	1.30	8.20
	T*9X*A10	FC/MC/PC37A	17.9	3.84	1.39	11.0	2.54	1.27	8.35
	T*9X*B12	FC/MC/PC35B	18.0	3.90	1.35	10.8	2.54	1.25	9.00
	Y*(8,L)C*A12	FC/MC/PC32A	18.0	3.76	1.40	11.0	2.48	1.30	8.50
	Y*(8,L)C*A12	FC/MC/PC37A	18.0	3.90	1.35	10.9	2.58	1.24	8.50
	Y*(8,L)C*B12	FC/MC/PC35B	18.0	3.84	1.37	10.9	2.50	1.28	8.50
	Y*(8,L)C*B12	FC/MC/PC43B	18.0	3.80	1.39	10.8	2.52	1.26	8.50
	Y*(8,L)C*C16	FC/MC/PC35C	18.0	3.82	1.38	10.9	2.52	1.27	8.50
	Y*9C*B12	FC/MC/PC35B	18.0	3.80	1.39	10.9	2.50	1.28	8.50
	Y*9C*C16	FC/MC/PC35C	18.0	3.84	1.37	10.9	2.50	1.28	8.50
THGF24S41S3	T*(8,L)V*A12	FC/MC/PC32A	22.2	3.62	1.80	15.0	2.42	1.82	8.50
	T*(8,L)V*A12	FC/MC/PC37A	22.4	3.76	1.75	15.0	2.50	1.76	8.50
	T*(8,L)V*B12	FC/MC/PC35B	22.0	3.56	1.81	14.9	2.40	1.82	8.50
	T*(8,L)V*B12	FC/MC/PC43B	22.0	3.68	1.75	14.9	2.46	1.77	8.50
	T*(8,L)V*C16	FC/MC/PC35C	22.2	3.68	1.77	14.9	2.44	1.79	8.50
	T*(8,L)V*C16	FC/MC/PC43C	22.2	3.84	1.69	14.9	2.52	1.73	8.50
	T*(8,L)V*C20	FC/MC/PC35C	21.8	3.60	1.77	14.8	2.42	1.79	8.50
	T*(8,L)V*C20	FC/MC/PC43C	22.0	3.72	1.73	14.8	2.50	1.73	8.50
	T*(8,L)X*A12	FC/MC/PC32A	22.0	3.72	1.73	14.8	2.48	1.75	8.50
	T*(8,L)X*A12	FC/MC/PC37A	22.2	3.88	1.68	14.8	2.56	1.69	8.50
	T*(8,L)X*B12	FC/MC/PC35B	22.0	3.74	1.72	14.8	2.48	1.75	8.50
	T*(8,L)X*B12	FC/MC/PC43B	22.0	3.88	1.66	14.8	2.58	1.68	8.50
	T*(8,L)X*C16	FC/MC/PC35C	22.0	3.76	1.71	14.8	2.50	1.73	8.50
	T*(8,L)X*C16	FC/MC/PC43C	22.0	3.88	1.66	14.8	2.58	1.68	8.50
	T*(8,L)X*C20	FC/MC/PC35C	22.0	3.76	1.71	14.8	2.48	1.75	8.50
	T*(8,L)X*C20	FC/MC/PC43C	22.0	3.74	1.74	13.6	2.48	1.61	8.50
	T*9V*A10	FC/MC/PC32A	22.4	3.50	1.88	13.9	2.34	1.74	8.10
	T*9V*A10	FC/MC/PC37A	22.6	3.58	1.85	13.9	2.38	1.71	8.10
	T*9(C,V)*B12	FC/MC/PC35B	22.2	3.64	1.79	15.0	2.42	1.82	8.50
	T*9(C,V)*B12	FC/MC/PC43B	22.2	3.78	1.72	15.0	2.52	1.74	8.50
	T*9(C,V)*C16	FC/MC/PC35C	22.2	3.70	1.76	15.0	2.44	1.80	8.50
	T*9(C,V)*C16	FC/MC/PC43C	22.2	3.82	1.70	14.9	2.52	1.73	8.50
	T*9(C,V)*C20	FC/MC/PC35C	22.0	3.58	1.80	14.8	2.42	1.79	8.50
	T*9(C,V)*C20	FC/MC/PC43C	22.4	3.82	1.72	14.9	2.52	1.73	8.50
	T*9X*A10	FC/MC/PC32A	22.2	3.48	1.87	13.8	2.34	1.73	8.25
	T*9X*A10	FC/MC/PC37A	22.4	3.56	1.84	13.8	2.40	1.68	8.25

For notes, see Page 19.

HEATING CAPACITY - With High Efficiency Motor Furnaces (Continued)

MODEL	FURNACE MODEL	COIL[1] MODEL	HEATING[2]						
			47°F			17°F			HSPF
			MBH	COP	KW	MBH	COP	KW	STD
14.5 SEER HP WITH HIGH EFFICIENCY MOTOR FURNACES[3]									
THGF24S41S3	T*9X*B12	FC/MC/PC35B	22.0	3.72	1.73	14.8	2.48	1.75	8.50
	T*9X*B12	FC/MC/PC43B	22.2	3.88	1.68	14.8	2.56	1.69	8.50
	T*9X*C16	FC/MC/PC35C	22.0	3.78	1.71	14.7	2.50	1.72	9.00
	T*9X*C16	FC/MC/PC43C	22.0	3.80	1.70	14.8	2.54	1.71	9.00
	T*9X*C20	FC/MC/PC35C	22.2	3.72	1.75	14.9	2.48	1.76	8.50
	T*9X*C20	FC/MC/PC43C	22.0	3.74	1.72	14.9	2.50	1.75	8.50
	Y*(8,L)C*A12	FC/MC/PC32A	22.2	3.62	1.80	15.0	2.42	1.82	8.50
	Y*(8,L)C*A12	FC/MC/PC37A	22.4	3.76	1.75	15.0	2.50	1.76	8.50
	Y*(8,L)C*B12	FC/MC/PC35B	22.0	3.56	1.81	14.9	2.40	1.82	8.50
	Y*(8,L)C*B12	FC/MC/PC43B	22.0	3.68	1.75	14.9	2.46	1.77	8.50
	Y*(8,L)C*C16	FC/MC/PC35C	22.2	3.68	1.77	14.9	2.44	1.79	8.50
	Y*(8,L)C*C16	FC/MC/PC43C	22.2	3.84	1.69	14.9	2.52	1.73	8.50
	Y*(8,L)C*C20	FC/MC/PC35C	21.8	3.60	1.77	14.8	2.42	1.79	8.50
	Y*(8,L)C*C20	FC/MC/PC43C	22.0	3.72	1.73	14.8	2.50	1.73	8.50
	Y*9C*B12	FC/MC/PC35B	22.2	3.64	1.79	15.0	2.42	1.82	8.50
	Y*9C*B12	FC/MC/PC43B	22.2	3.78	1.72	15.0	2.52	1.74	8.50
	Y*9C*C16	FC/MC/PC35C	22.2	3.70	1.76	15.0	2.44	1.80	8.50
	Y*9C*C16	FC/MC/PC43C	22.2	3.82	1.70	14.9	2.52	1.73	8.50
	Y*9C*C20	FC/MC/PC35C	22.0	3.58	1.80	14.8	2.42	1.79	8.50
	Y*9C*C20	FC/MC/PC43C	22.4	3.82	1.72	14.9	2.52	1.73	8.50
THGF30S41S3	T*(8,L)V*A12	FC/MC/PC37A	30.0	3.80	2.31	19.1	2.62	2.14	8.50
	T*(8,L)V*B12	FC/MC/PC43B	30.0	3.86	2.28	18.9	2.66	2.08	8.50
	T*(8,L)V*C16	FC/MC/PC43C	30.0	3.92	2.24	18.7	2.70	2.03	9.00
	T*(8,L)V*C20	FC/MC/PC43C	30.0	3.94	2.23	18.7	2.72	2.01	9.00
	T*(8,L)X*A12	FC/MC/PC37A	30.0	4.02	2.19	18.9	2.74	2.02	9.00
	T*(8,L)X*B12	FC/MC/PC43B	30.0	4.00	2.20	18.9	2.72	2.04	9.00
	T*(8,L)X*C16	FC/MC/PC43C	30.0	3.96	2.22	18.6	2.74	1.99	9.00
	T*9(C,V)*B12	FC/MC/PC43B	30.0	3.84	2.29	19.0	2.64	2.11	8.50
	T*9(C,V)*C16	FC/MC/PC43C	30.0	3.90	2.25	18.9	2.68	2.07	9.00
	T*9(C,V)*C20	FC/MC/PC43C	30.0	3.90	2.25	18.8	2.70	2.04	9.00
	T*9X*B12	FC/MC/PC43B	30.0	3.98	2.21	18.8	2.72	2.03	9.00
	T*9X*C16	FC/MC/PC43C	30.0	3.96	2.22	18.8	2.72	2.03	9.00
	Y*(8,L)C*A12	FC/MC/PC37A	30.0	3.80	2.31	19.1	2.62	2.14	8.50
	Y*(8,L)C*B12	FC/MC/PC43B	30.0	3.86	2.28	18.9	2.66	2.08	8.50
	Y*(8,L)C*C16	FC/MC/PC43C	30.0	3.92	2.24	18.7	2.70	2.03	9.00
	Y*(8,L)C*C20	FC/MC/PC43C	30.0	3.94	2.23	18.7	2.72	2.01	9.00
	Y*9C*B12	FC/MC/PC43B	30.0	3.84	2.29	19.0	2.64	2.11	8.50
	Y*9C*C16	FC/MC/PC43C	30.0	3.90	2.25	18.9	2.68	2.07	9.00
	Y*9C*C20	FC/MC/PC43C	30.0	3.90	2.25	18.8	2.70	2.04	9.00
THGF36S41S4	T*(8,L)V*B12	FC/MC/PC43B	35.4	3.64	2.85	21.0	2.64	2.33	8.20
	T*(8,L)V*C16	FC/MC/PC43C	35.0	3.76	2.73	20.6	2.76	2.19	8.50
	T*(8,L)V*C16	FC/MC/PC48C	34.6	3.78	2.68	20.4	2.78	2.15	8.50
	T*(8,L)V*C16	FC/PC60C	35.2	3.96	2.60	20.8	2.88	2.12	8.50
	T*(8,L)V*C16	UC48C	35.4	3.90	2.66	20.8	2.82	2.16	9.00
	T*(8,L)V*C16	UC60C	35.2	3.90	2.64	20.2	2.78	2.13	9.00
	T*(8,L)V*C20	FC/MC/PC43C	35.0	3.78	2.71	20.4	2.76	2.17	8.50
	T*(8,L)V*C20	FC/MC/PC48C	34.6	3.80	2.67	20.4	2.80	2.13	8.50
	T*(8,L)V*C20	FC/PC60C	35.4	3.92	2.65	20.8	2.84	2.15	8.50
	T*(8,L)V*C20	UC48C	35.4	3.92	2.65	20.6	2.86	2.11	9.00
	T*(8,L)V*C20	UC60C	35.2	3.88	2.66	20.2	2.76	2.14	9.00

For notes, see Page 19.

HEATING CAPACITY - With High Efficiency Motor Furnaces (Continued)

MODEL	FURNACE MODEL	COIL[1] MODEL	HEATING[2]						
			47°F			17°F			HSPF
			MBH	COP	KW	MBH	COP	KW	STD
14.5 SEER HP WITH HIGH EFFICIENCY MOTOR FURNACES[3]									
THGF36S41S4	T*(8,L)X*A12	FC/MC/PC37A	35.2	3.78	2.73	20.8	2.76	2.21	8.20
	T*(8,L)X*B12	FC/MC/PC43B	35.2	3.78	2.73	20.6	2.74	2.20	8.50
	T*(8,L)X*C16	FC/MC/PC43C	34.8	3.88	2.63	20.2	2.84	2.08	9.00
	T*(8,L)X*C16	FC/MC/PC48C	34.4	3.86	2.61	20.2	2.84	2.08	9.00
	T*(8,L)X*C16	FC/PC60C	35.2	4.00	2.58	20.6	2.92	2.07	9.00
	T*(8,L)X*C16	UC48C	35.2	3.98	2.59	20.6	2.90	2.08	9.00
	T*(8,L)X*C16	UC60C	35.0	3.96	2.59	20.0	2.82	2.08	9.00
	T*(8,L)X*C20	FC/MC/PC43C	35.0	3.82	2.68	20.4	2.80	2.13	8.50
	T*(8,L)X*C20	FC/MC/PC48C	35.2	3.88	2.66	20.4	2.82	2.12	9.00
	T*(8,L)X*C20	FC/PC60C	35.6	4.02	2.59	20.8	2.90	2.10	9.00
	T*(8,L)X*C20	UC48C	35.6	3.98	2.62	20.8	2.88	2.12	9.00
	T*(8,L)X*C20	UC60C	35.4	3.96	2.62	20.2	2.80	2.11	9.00
	T*9(C,V)*B12	FC/MC/PC43B	35.4	3.66	2.83	20.8	2.66	2.29	8.20
	T*9(C,V)*C16	FC/MC/PC43C	35.2	3.70	2.79	20.8	2.70	2.26	8.20
	T*9(C,V)*C16	FC/MC/PC48C	34.8	3.74	2.73	20.6	2.74	2.20	8.50
	T*9(C,V)*C16	FC/PC60C	35.6	3.84	2.72	21.0	2.78	2.21	8.20
	T*9(C,V)*C16	UC48C	35.6	3.86	2.70	20.8	2.80	2.18	8.50
	T*9(C,V)*C16	UC60C	35.6	3.80	2.74	20.4	2.70	2.21	8.20
	T*9(C,V)*C20	FC/MC/PC43C	35.2	3.76	2.74	20.6	2.74	2.20	8.20
	T*9(C,V)*C20	FC/MC/PC48C	35.6	3.76	2.77	21.0	2.72	2.26	8.20
	T*9(C,V)*C20	FC/PC60C	36.2	3.92	2.71	21.4	2.80	2.24	8.50
	T*9(C,V)*C20	UC48C	36.4	3.88	2.75	21.4	2.76	2.27	8.50
	T*9(C,V)*C20	UC60C	36.0	3.86	2.73	20.8	2.72	2.24	8.50
	T*9(C,V)*D20	FC/MC/PC48D	34.8	3.76	2.71	20.6	2.76	2.19	8.50
	T*9(C,V)*D20	FC/MC/PC60D	35.4	3.90	2.66	21.0	2.82	2.18	8.50
	T*9(C,V)*D20	UC48D	35.4	3.88	2.67	20.8	2.80	2.18	9.00
	T*9(C,V)*D20	UC60D	35.4	3.86	2.69	20.2	2.74	2.16	8.50
	T*9X*B12	FC/MC/PC43B	35.0	3.74	2.74	20.6	2.72	2.22	8.20
	T*9X*C16	FC/MC/PC43C	35.0	3.76	2.73	20.4	2.74	2.18	8.50
	T*9X*C16	FC/MC/PC48C	35.0	3.82	2.68	20.6	2.78	2.17	8.50
	T*9X*C16	FC/PC60C	35.8	3.98	2.64	21.0	2.86	2.15	8.50
	T*9X*C16	UC48C	35.8	3.94	2.66	21.0	2.84	2.17	9.00
	T*9X*C16	UC60C	35.8	3.94	2.66	20.4	2.78	2.15	9.00
	T*9X*C20	FC/MC/PC43C	35.0	3.80	2.70	20.4	2.78	2.15	8.50
	T*9X*C20	FC/MC/PC48C	34.6	3.78	2.68	20.4	2.78	2.15	8.50
	T*9X*C20	FC/PC60C	35.4	3.94	2.63	20.8	2.86	2.13	8.50
	T*9X*C20	UC48C	35.4	3.92	2.65	20.8	2.84	2.15	9.00
	T*9X*C20	UC60C	35.2	3.90	2.64	20.2	2.78	2.13	9.00
	T*9X*D20	FC/MC/PC48D	34.6	3.80	2.67	20.4	2.80	2.13	8.50
	T*9X*D20	FC/MC/PC60D	35.8	4.06	2.58	21.0	2.92	2.11	9.00
	T*9X*D20	UC48D	35.4	3.92	2.65	20.6	2.86	2.11	9.00
	T*9X*D20	UC60D	35.6	4.00	2.61	20.2	2.82	2.10	9.00
	Y*(8,L)C*A12	FC/MC/PC37A	35.4	3.66	2.83	20.8	2.66	2.29	8.20
	Y*(8,L)C*B12	FC/MC/PC43B	35.4	3.64	2.85	21.0	2.64	2.33	8.20
	Y*(8,L)C*C16	FC/MC/PC43C	35.0	3.76	2.73	20.6	2.76	2.19	8.50
	Y*(8,L)C*C16	FC/MC/PC48C	34.6	3.78	2.68	20.4	2.78	2.15	8.50
	Y*(8,L)C*C16	FC/PC60C	35.2	3.96	2.60	20.8	2.88	2.12	8.50
	Y*(8,L)C*C16	UC48C	35.4	3.90	2.66	20.8	2.82	2.16	9.00
	Y*(8,L)C*C16	UC60C	35.2	3.90	2.64	20.2	2.78	2.13	9.00
	Y*(8,L)C*C20	FC/MC/PC43C	35.0	3.78	2.71	20.4	2.76	2.17	8.50

For notes, see Page 19.

HEATING CAPACITY - With High Efficiency Motor Furnaces (Continued)

MODEL	FURNACE MODEL	COIL[1] MODEL	HEATING[2]						
			47°F			17°F			HSPF
			MBH	COP	KW	MBH	COP	KW	STD
14.5 SEER HP WITH HIGH EFFICIENCY MOTOR FURNACES[3]									
THGF36S41S4	Y*(8,L)C*C20	FC/MC/PC48C	34.6	3.80	2.67	20.4	2.80	2.13	8.50
	Y*(8,L)C*C20	FC/PC60C	35.4	3.92	2.65	20.8	2.84	2.15	8.50
	Y*(8,L)C*C20	UC48C	35.4	3.92	2.65	20.6	2.86	2.11	9.00
	Y*(8,L)C*C20	UC60C	35.2	3.88	2.66	20.2	2.76	2.14	9.00
	Y*9C*B12	FC/MC/PC43B	35.4	3.66	2.83	20.8	2.66	2.29	8.20
	Y*9C*C16	FC/MC/PC43C	35.2	3.70	2.79	20.8	2.70	2.26	8.20
	Y*9C*C16	FC/MC/PC48C	34.8	3.74	2.73	20.6	2.74	2.20	8.50
	Y*9C*C16	FC/PC60C	35.6	3.84	2.72	21.0	2.78	2.21	8.20
	Y*9C*C16	UC48C	35.6	3.86	2.70	20.8	2.80	2.18	8.50
	Y*9C*C16	UC60C	35.6	3.80	2.74	20.4	2.70	2.21	8.20
	Y*9C*C20	FC/MC/PC43C	35.2	3.76	2.74	20.6	2.74	2.20	8.20
	Y*9C*C20	FC/MC/PC48C	35.6	3.76	2.77	21.0	2.72	2.26	8.20
	Y*9C*C20	FC/PC60C	36.2	3.92	2.71	21.4	2.80	2.24	8.50
	Y*9C*C20	UC48C	36.4	3.88	2.75	21.4	2.76	2.27	8.50
	Y*9C*C20	UC60C	36.0	3.86	2.73	20.8	2.72	2.24	8.50
	Y*9C*D20	FC/MC/PC48D	34.8	3.76	2.71	20.6	2.76	2.19	8.50
	Y*9C*D20	FC/MC/PC60D	35.4	3.90	2.66	21.0	2.82	2.18	8.50
	Y*9C*D20	UC48D	35.4	3.88	2.67	20.8	2.80	2.18	9.00
	Y*9C*D20	UC60D	35.4	3.86	2.69	20.2	2.74	2.16	8.50
THGF42S41S3	T*(8,L)V*C16	FC/MC/PC48C	38.5	3.70	3.05	26.4	2.58	3.00	8.50
	T*(8,L)V*C16	FC/MC62D	39.0	3.84	2.98	25.8	2.60	2.91	9.00
	T*(8,L)V*C16	FC/PC60C	39.0	3.90	2.93	29.0	2.90	2.93	8.50
	T*(8,L)V*C20	FC/MC/PC48C	38.5	3.76	3.00	26.4	2.62	2.95	8.50
	T*(8,L)V*C20	FC/MC62D	38.5	3.88	2.91	25.6	2.62	2.86	9.00
	T*(8,L)V*C20	FC/PC60C	38.5	3.96	2.85	28.8	2.94	2.87	8.50
	T*(8,L)X*C16	FC/MC/PC48C	38.0	3.86	2.88	26.0	2.68	2.84	9.00
	T*(8,L)X*C16	FC/MC62D	38.5	3.94	2.86	25.4	2.66	2.80	9.00
	T*(8,L)X*C16	FC/PC60C	38.5	4.04	2.79	28.6	3.00	2.79	9.00
	T*(8,L)X*C20	FC/MC/PC48C	38.5	3.88	2.91	26.2	2.70	2.84	9.00
	T*(8,L)X*C20	FC/MC62D	38.5	3.96	2.85	25.6	2.68	2.80	9.00
	T*(8,L)X*C20	FC/PC60C	38.5	4.04	2.79	28.8	3.00	2.81	9.00
	T*9(C,V)*C16	FC/MC/PC48C	38.5	3.72	3.03	26.6	2.60	3.00	8.50
	T*9(C,V)*C16	FC/MC62D	39.0	3.74	3.06	26.2	2.54	3.02	8.50
	T*9(C,V)*C16	FC/PC60C	39.0	3.82	2.99	29.2	2.84	3.01	8.20
	T*9(C,V)*C20	FC/MC/PC48C	38.5	3.70	3.05	26.6	2.58	3.02	8.20
	T*9(C,V)*C20	FC/MC62D	39.0	3.78	3.02	26.0	2.56	2.98	8.50
	T*9(C,V)*C20	FC/PC60C	39.0	3.88	2.95	29.0	2.88	2.95	8.20
	T*9(C,V)*D20	FC/MC/PC48D	38.5	3.74	3.02	26.4	2.60	2.98	8.50
	T*9(C,V)*D20	FC/MC/PC60D	39.0	3.90	2.93	29.0	2.90	2.93	8.50
	T*9(C,V)*D20	FC/MC62D	39.0	3.82	2.99	25.8	2.58	2.93	9.00
	T*9X*C16	FC/MC/PC48C	38.5	3.78	2.98	26.4	2.62	2.95	8.50
	T*9X*C16	FC/MC62D	38.5	3.86	2.92	25.8	2.60	2.91	9.00
	T*9X*C16	FC/PC60C	39.0	3.94	2.90	28.8	2.94	2.87	8.50
	T*9X*C20	FC/MC/PC48C	38.5	3.80	2.97	26.2	2.64	2.91	9.00
	T*9X*C20	FC/MC62D	38.5	3.90	2.89	25.6	2.64	2.84	9.00
	T*9X*C20	FC/PC60C	38.5	3.98	2.83	28.6	2.96	2.83	9.00
	T*9X*D20	FC/MC/PC48D	38.5	3.82	2.95	26.2	2.66	2.89	9.00
	T*9X*D20	FC/MC/PC60D	38.5	4.08	2.76	28.6	3.02	2.77	9.00
	T*9X*D20	FC/MC62D	38.5	3.90	2.89	25.6	2.64	2.84	9.00
	Y*(8,L)C*C16	FC/MC/PC48C	38.5	3.70	3.05	26.4	2.58	3.00	8.50

For notes, see Page 19.

HEATING CAPACITY - With High Efficiency Motor Furnaces (Continued)

MODEL	FURNACE MODEL	COIL[1] MODEL	HEATING[2]						
			47°F			17°F			HSPF
			MBH	COP	KW	MBH	COP	KW	STD
14.5 SEER HP WITH HIGH EFFICIENCY MOTOR FURNACES[3]									
THGF42S41S3	Y*(8,L)C*C16	FC/MC62D	39.0	3.84	2.98	25.8	2.60	2.91	9.00
	Y*(8,L)C*C16	FC/PC60C	39.0	3.90	2.93	29.0	2.90	2.93	8.50
	Y*(8,L)C*C20	FC/MC/PC48C	38.5	3.76	3.00	26.4	2.62	2.95	8.50
	Y*(8,L)C*C20	FC/MC62D	38.5	3.88	2.91	25.6	2.62	2.86	9.00
	Y*(8,L)C*C20	FC/PC60C	38.5	3.96	2.85	28.8	2.94	2.87	8.50
	Y*9C*C16	FC/MC/PC48C	38.5	3.72	3.03	26.6	2.60	3.00	8.50
	Y*9C*C16	FC/MC62D	39.0	3.74	3.06	26.2	2.54	3.02	8.50
	Y*9C*C16	FC/PC60C	39.0	3.82	2.99	29.2	2.84	3.01	8.20
	Y*9C*C20	FC/MC/PC48C	38.5	3.70	3.05	26.6	2.58	3.02	8.20
	Y*9C*C20	FC/MC62D	39.0	3.78	3.02	26.0	2.56	2.98	8.50
	Y*9C*C20	FC/PC60C	39.0	3.88	2.95	29.0	2.88	2.95	8.20
	Y*9C*D20	FC/MC/PC48D	38.5	3.74	3.02	26.4	2.60	2.98	8.50
	Y*9C*D20	FC/MC/PC60D	39.0	3.90	2.93	29.0	2.90	2.93	8.50
	Y*9C*D20	FC/MC62D	39.0	3.82	2.99	25.8	2.58	2.93	9.00
THGF48S41S3	T*(8,L)V*C16	FC/MC62D	48.0	3.68	4.06	32.8	2.54	3.78	9.00
	T*(8,L)V*C16	FC64D	48.0	3.82	3.95	33.2	2.64	3.68	9.00
	T*(8,L)V*C20	FC/MC62D	48.0	3.76	3.74	32.0	2.56	3.66	9.00
	T*(8,L)V*C20	FC64D	48.0	3.80	3.70	32.4	2.62	3.62	9.00
	T*(8,L)X*C16	FC/MC62D	48.0	3.78	3.72	32.0	2.56	3.66	9.00
	T*(8,L)X*C16	FC64D	48.0	3.82	3.68	32.4	2.64	3.60	9.00
	T*(8,L)X*C20	FC/MC62D	48.0	3.80	3.70	31.8	2.58	3.61	9.00
	T*(8,L)X*C20	FC64D	48.0	3.84	3.66	32.2	2.66	3.55	9.00
	T*9(C,V)*C16	FC/MC62D	48.0	3.72	3.78	32.2	2.54	3.71	9.00
	T*9(C,V)*C16	FC64D	48.0	3.76	3.74	32.6	2.60	3.67	9.00
	T*9(C,V)*C20	FC/MC62D	48.0	3.68	3.82	32.4	2.50	3.80	9.00
	T*9(C,V)*C20	FC64D	48.0	3.72	3.78	32.8	2.58	3.73	8.50
	T*9(C,V)*D20	FC/MC62D	48.0	3.72	3.78	32.2	2.52	3.74	9.00
	T*9(C,V)*D20	FC64D	48.0	3.76	3.74	32.6	2.60	3.67	9.00
	T*9X*C16	FC/MC62D	48.0	3.76	3.74	32.0	2.56	3.66	9.00
	T*9X*C16	FC64D	48.0	3.82	3.68	32.4	2.62	3.62	9.00
	T*9X*C20	FC/MC62D	48.0	3.80	3.70	32.0	2.58	3.63	9.00
	T*9X*C20	FC64D	48.0	3.84	3.66	32.2	2.64	3.57	9.00
	T*9X*D20	FC/MC62D	48.0	3.76	3.74	32.0	2.56	3.66	9.00
	T*9X*D20	FC64D	48.0	3.80	3.70	32.4	2.62	3.62	9.00
	Y*(8,L)C*C16	FC/MC62D	0.0	0.00	0.00	0.0	0.00	0.00	0.00
	Y*(8,L)C*C16	FC64D	0.0	0.00	0.00	0.0	0.00	0.00	0.00
	Y*(8,L)C*C20	FC/MC62D	48.0	3.76	3.74	32.0	2.56	3.66	9.00
	Y*(8,L)C*C20	FC64D	48.0	3.80	3.70	32.4	2.62	3.62	9.00
	Y*9C*C16	FC/MC62D	48.0	3.72	3.78	32.2	2.54	3.71	9.00
	Y*9C*C16	FC64D	48.0	3.76	3.74	32.6	2.60	3.67	9.00
	Y*9C*C20	FC/MC62D	48.0	3.68	3.82	32.4	2.50	3.80	9.00
	Y*9C*C20	FC64D	48.0	3.72	3.78	32.8	2.58	3.73	8.50
	Y*9C*D20	FC/MC62D	48.0	3.72	3.78	32.2	2.52	3.74	9.00
	Y*9C*D20	FC64D	48.0	3.76	3.74	32.6	2.60	3.67	9.00

1. MC coils available with a factory installed horizontal drain pan. See price pages for specific model number.
2. Heating MBH based on AHRI standards of 70 °F DB (Dry Bulb) entering indoor air, 72% RH (Relative Humidity) outdoor air with 25 feet of interconnecting piping and no supplemental electric heat operation.
3. High Efficiency Motor Furnaces have B.O.D (Blower on Delay) standard.

COP equals MBH output divided by (total KW input x 3.412).

HSPF (Heating Seasonal Performance Factor) is the total heating output during a normal annual usage period for heating divided by the total electric power input during the same period.

PSC furnaces, such as the TG8S, TGLS, and TG9S, use Coil Only Ratings.

— = Not Applicable.

HEATING CAPACITY - With High Efficiency Motor Furnaces

UNIT MODEL	FURNACE MODEL	COIL[1] MODEL	HEATING[2]					
			STAGE	RATED CFM	NET MBH 47 OD	NET MBH 17 OD	HSPF	COP @ 47
14.5 SEER HP WITH HIGH EFFICIENCY MOTOR FURNACES[3]								
THGF60S41S3	T*(8,L)V*C20	FC/MC62D	1	1015	42.5	–	–	3.20
			2	1615	57.0	40.0	9.00	3.58
			2*	1015	55.6	39.0	8.75	2.86
	T*(8,L)V*C20	FC64D	1	1015	42.5	–	–	3.26
			2	1615	60.0	40.0	9.00	3.66
			2*	1015	57.0	39.0	8.70	2.92
	T*(8,L)X*C20	FC/MC62D	1	835	42.0	–	–	2.98
			2	1665	57.0	39.5	9.00	3.64
			2*	835	56.5	38.5	8.85	2.62
	T*(8,L)X*C20	FC64D	1	835	42.0	–	–	3.06
			2	1665	60.0	40.0	9.00	3.74
			2*	835	56.0	39.5	8.85	2.66
	T*9(C,V)*C20	FC/MC62D	1	1040	43.0	–	–	3.20
			2	1655	57.0	40.5	9.00	3.54
			2*	1040	54.9	39.0	8.70	2.88
	T*9(C,V)*C20	FC64D	1	1040	42.5	–	–	3.26
			2	1655	60.0	40.5	9.00	3.62
			2*	1040	57.5	39.0	8.60	2.94
	T*9(C,V)*D20	FC/MC62D	1	1085	43.0	–	–	3.26
			2	1630	57.0	40.0	9.00	3.54
			2*	1085	55.6	39.0	8.65	2.94
	T*9(C,V)*D20	FC64D	1	1085	43.0	–	–	3.32
			2	1630	60.0	40.5	9.00	3.66
			2*	1085	58.0	39.5	8.65	3.00
	T*9X*C20	FC/MC62D	1	1220	43.5	–	–	3.38
			2	1595	57.0	40.0	9.00	3.58
			2*	1220	55.6	39.0	8.60	3.08
	T*9X*C20	FC64D	1	1220	43.5	–	–	3.48
			2	1595	60.0	40.0	9.00	3.66
			2*	1220	58.5	39.0	8.65	3.16
	T*9X*D20	FC/MC62D	1	1240	43.5	–	–	3.42
			2	1645	57.0	40.0	9.00	3.60
			2*	1240	55.6	39.0	8.65	3.10
	T*9X*D20	FC64D	1	1240	43.5	–	–	3.50
			2	1645	60.0	40.0	9.00	3.70
			2*	1240	58.5	39.0	8.70	3.18
	Y*(8,L)C*C20	FC/MC62D	1	1015	42.5	–	–	3.20
			2	1615	57.0	40.0	9.00	3.58
			2*	1015	55.6	39.0	8.75	2.86
	Y*(8,L)C*C20	FC64D	1	1015	42.5	–	–	3.26
			2	1615	60.0	40.0	9.00	3.66
			2*	1015	57.0	39.0	8.70	2.92
	Y*9C*C20	FC/MC62D	1	1040	43.0	–	–	3.20
			2	1655	57.0	40.5	9.00	3.54
			2*	1040	54.9	39.0	8.70	2.88
	Y*9C*C20	FC64D	1	1040	42.5	–	–	3.26
			2	1655	60.0	40.5	9.00	3.62
			2*	1040	57.5	39.0	8.60	2.94
	Y*9C*D20	FC/MC62D	1	1085	43.0	–	–	3.26
			2	1630	57.0	40.0	9.00	3.54
			2*	1085	55.6	39.0	8.65	2.94
	Y*9C*D20	FC64D	1	1085	43.0	–	–	3.32
			2	1630	60.0	40.5	9.00	3.66
			2*	1085	58.0	39.5	8.65	3.00

1. MC coils available with a factory installed horizontal drain pan. See price pages for specific model number.
2. Heating MBH based on AHRI standards of 70 °F DB (Dry Bulb) entering indoor air, 72% RH (Relative Humidity) outdoor air with 25 feet of interconnecting piping and no supplemental electric heat operation.
3. High Efficiency Motor Furnaces have B.O.D (Blower on Delay) standard.

* Notates “Hot Heat Pump” performance. These ratings are not AHRI Listed.

COP equals MBH output divided by (total KW input x 3.412).

HSPF (Heating Seasonal Performance Factor) is the total heating output during a normal annual usage period for heating divided by the total electric power input during the same period.

— = Not Applicable.

PSC furnaces, such as the TG8S, TGLS, and TG9S, use Coil Only Ratings.

ACCESSORIES

Refer to Price Manual for specific model numbers.

Start Assist Kit - Provides increased starting torque for areas with low voltage. See Hard Start Kit Accessory Installation Manual for Hard Start Kit part number for each model.

Blower Time Delay - Available to increase efficiency when installed. Installs on indoor section and maintains blower for approximately one minute after cooling thermostat has been satisfied.

Low Temperature Cutout (S1-2LT06700224) - Prevents heat pump operation below -10°F ambient temperature.

TXV Kits - S1-1TVM series thermal expansion valves precisely meter refrigerant for optimum performance over a wide range of conditions. See System Charge table for TXV part number for each model.

Outdoor Thermostat (S1-2TD06700124) - Provides additional staging of supplemental electric heat.

Thermostats - Compatible thermostat controls are available through accessory sourcing. For optimum performance and installation, refer to the UPGNET “Low Voltage Wiring Diagram” document to select and apply controls.

SOUND LEVEL - TYPICAL OCTAVE BAND SPECTRUM (without tone adjustment)

Size	Test Condition	63	125	250	500	1000	2000	4000	8000	dBA	SQI
18	Cooling Mode	67	71	67	69	65	59	58	55	70	19.2
	Heating Mode	68	70	66	68	67	61	60	57	71	19.2
24	Cooling Mode	69	73	64	67	68	64	61	57	71	19.0
	Heating Mode	71	72	65	70	65	64	62	58	73	19.0
30	Cooling Mode	72	70	68	67	67	63	59	55	71	19.0
	Heating Mode	74	72	73	68	70	64	61	57	74	19.0
36	Cooling Mode	73	70	72	70	68	63	60	57	73	19.1
	Heating Mode	75	73	71	70	70	65	63	61	74	19.1
42	Cooling Mode	70	71	67	70	73	65	61	59	75	19.0
	Heating Mode	73	72	71	72	72	66	62	61	75	19.0
48	Cooling Mode	71	71	69	70	71	63	60	57	73	19.1
	Heating Mode	73	75	74	75	78	66	65	61	79	19.1
60	Cooling Mode - High Stage	73	70	69	72	75	65	62	59	77	19.1
	Heating Mode - High Stage	74	75	72	73	76	68	66	63	79	19.0

Rated in accordance with ARI Standard 270.

TYPICAL INSTALLATION

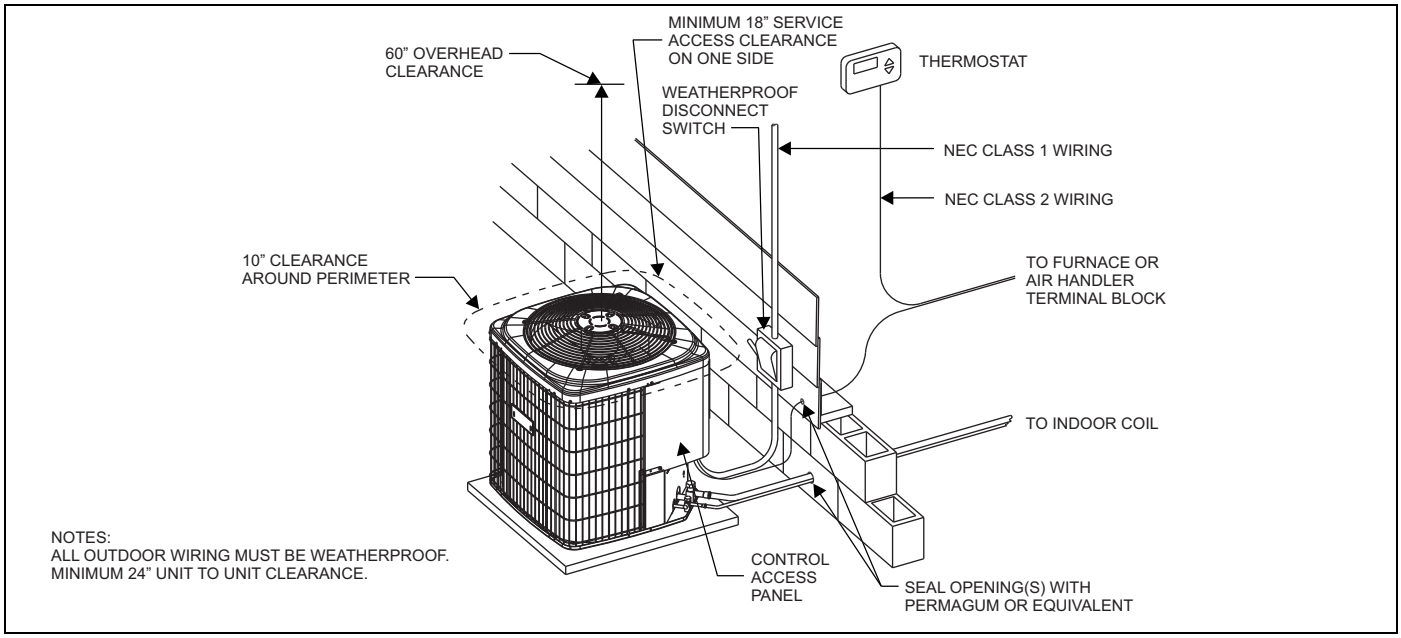

TYPICAL FIELD WIRING

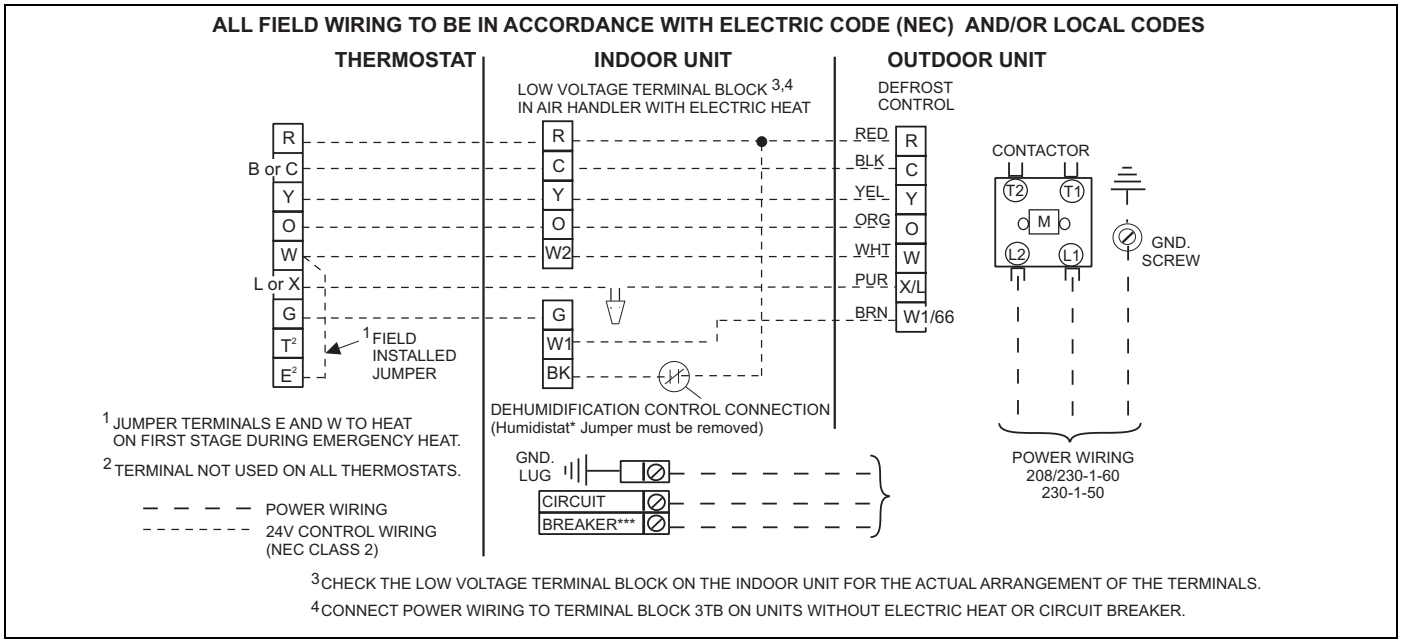

COOLING PERFORMANCE DATA																
CONDENSING UNIT MODEL NO.		THGF18S41S3														
INDOOR COIL MODEL NO.		AHX30														
CONDENSING ENTERING AIR TEMPERATURE	IDCFM	400					600					800				
	ID DB (°F)	80	80	75	80	80	80	80	75	80	80	80	80	75	80	80
	ID WB (°F)	57	62	62	67	72	57	62	62	67	72	57	62	62	67	72
65	T.C.	17.2	18.8	18.8	20.5	22.2	19.2	19.9	20.1	21.7	22.9	21.2	20.9	21.3	22.8	23.6
	S.C.	16.8	14.9	12.9	12.9	11.0	18.8	17.7	15.2	14.7	11.7	20.8	20.5	17.4	16.5	12.5
	KW	0.86	0.89	0.89	0.88	0.88	0.94	0.96	0.96	0.95	0.95	1.02	1.02	1.02	1.02	1.02
75	T.C.	16.4	17.9	17.9	19.7	21.3	18.4	19.1	19.0	20.8	22.1	20.4	20.2	20.2	21.8	22.9
	S.C.	16.1	14.5	12.5	12.5	10.5	18.0	17.1	14.8	14.4	11.5	20.0	19.8	17.0	16.3	12.4
	KW	0.99	1.02	1.02	1.02	1.02	1.08	1.09	1.09	1.09	1.10	1.17	1.16	1.17	1.17	1.18
85	T.C.	15.7	17.0	17.0	18.9	20.4	17.7	18.3	18.0	19.9	21.3	19.6	19.5	19.1	20.8	22.1
	S.C.	15.4	14.1	12.1	12.1	10.1	17.3	16.6	14.3	14.2	11.2	19.2	19.1	16.6	16.2	12.2
	KW	1.12	1.14	1.14	1.15	1.17	1.22	1.23	1.22	1.24	1.25	1.31	1.31	1.31	1.32	1.33
95	T.C.	15.0	16.1	16.1	18.1	19.6	16.9	17.4	17.0	19.0	20.4	18.8	18.8	18.0	19.8	21.3
	S.C.	14.7	13.7	11.6	11.8	9.7	16.5	16.0	13.9	13.9	10.9	18.4	18.4	16.2	16.0	12.1
	KW	1.25	1.26	1.26	1.29	1.31	1.36	1.36	1.36	1.38	1.40	1.46	1.46	1.45	1.46	1.49
105	T.C.	14.0	14.7	14.8	16.7	18.4	15.9	16.2	15.7	17.6	19.2	17.7	17.7	16.6	18.5	20.1
	S.C.	13.7	13.1	11.0	11.2	9.2	15.5	15.2	13.3	13.4	10.4	17.3	17.3	15.6	15.6	11.6
	KW	1.41	1.42	1.42	1.45	1.48	1.52	1.52	1.51	1.54	1.57	1.63	1.63	1.61	1.63	1.65
115	T.C.	13.1	13.4	13.4	15.4	17.2	14.8	15.0	14.4	16.2	18.0	16.6	16.6	15.3	17.1	18.8
	S.C.	12.8	12.5	10.5	10.6	8.7	14.5	14.4	12.7	12.9	9.9	16.2	16.2	15.0	15.1	11.2
	KW	1.56	1.57	1.57	1.60	1.65	1.68	1.68	1.67	1.70	1.74	1.80	1.80	1.77	1.80	1.82
125	T.C.	12.2	12.1	12.1	14.0	16.1	13.8	13.8	13.0	14.9	16.8	15.5	15.5	14.0	15.7	17.5
	S.C.	11.9	11.9	9.9	10.1	8.2	13.5	13.5	12.1	12.3	9.5	15.1	15.1	14.0	14.6	10.7
	KW	1.72	1.72	1.72	1.76	1.82	1.84	1.84	1.82	1.87	1.90	1.97	1.97	1.92	1.97	1.99
NOTE: ALL CAPACITIES INCLUDE INDOOR FAN HEAT. KW VALUES ARE FOR THE SYSTEM (OUTDOOR + INDOOR).																

Multipliers for determining the performance with other indoor sections.

NOTE: For dry bulb temperatures different than those listed (between 73-87 °F), sensible capacity increases by 1060 BTUH per 1000 CFM per degree above the listed temperature and decreases by 1060 BTUH per 1000 CFM per degree below the listed temperature.

Air Handler	Coil	T.C.	S.C.	KW
–	FC/MC/PC32	0.96	0.94	1.11
–	FC/MC/PC35	0.96	0.94	1.11
–	FC/MC/PC37	0.96	0.95	1.11
–	FC/MC/PC43	0.96	0.95	1.11
AHE24B	–	0.98	0.96	1.00
AHE30B	–	0.98	0.96	1.01
AHR24B	–	0.96	0.94	1.11
AHV24B	–	0.98	0.96	1.01
AHV30B	–	1.01	1.05	1.04
AHV36C	–	1.01	1.04	1.02
AV*36	–	1.00	1.01	1.00
MV12B	FC/MC35B	0.98	0.96	1.02
MV12B	FC/MC43B	0.98	0.97	1.02
MX12B	FC/MC35B	1.01	1.03	0.99
MX12B	FC/MC43B	0.99	0.98	1.00

Furnace	Coil	T.C.	S.C.	KW
T*(8,L)V*A12	FC/MC/PC32A	0.98	0.96	1.02
T*(8,L)V*A12	FC/MC/PC37A	0.99	1.01	1.02
T*(8,L)V*B12	FC/MC/PC35B	0.99	0.99	1.02
T*(8,L)V*B12	FC/MC/PC43B	0.97	0.96	1.01
T*(8,L)V*C16	FC/MC/PC35C	0.99	1.01	1.01
T*(8,L)X*A12	FC/MC/PC32A	0.98	0.97	0.99
T*(8,L)X*A12	FC/MC/PC37A	1.01	1.03	0.99
T*(8,L)X*B12	FC/MC/PC35B	1.00	1.01	0.99
T*(8,L)X*B12	FC/MC/PC43B	1.01	1.05	0.99
T*(8,L)X*C16	FC/MC/PC35C	0.98	0.96	1.00
T*9V*A10	FC/MC/PC32A	0.98	0.96	1.03
T*9V*A10	FC/MC/PC37A	0.97	0.95	1.03
T*9(C,V)*B12	FC/MC/PC35B	0.97	0.95	1.01
T*9(C,V)*C16	FC/MC/PC35C	0.99	1.01	1.01
T*9X*A10	FC/MC/PC32A	0.98	0.96	1.02
T*9X*A10	FC/MC/PC37A	0.98	0.97	1.02
T*9X*B12	FC/MC/PC35B	1.00	1.02	0.99
Y*(8,L)C*A12	FC/MC/PC32A	0.98	0.96	1.02
Y*(8,L)C*A12	FC/MC/PC37A	0.99	1.01	1.02
Y*(8,L)C*B12	FC/MC/PC35B	0.99	0.99	1.02
Y*(8,L)C*B12	FC/MC/PC43B	0.97	0.96	1.01
Y*(8,L)C*C16	FC/MC/PC35C	0.99	1.01	1.01
Y*9C*B12	FC/MC/PC35B	0.97	0.95	1.01
Y*9C*C16	FC/MC/PC35C	0.99	1.01	1.01

COOLING PERFORMANCE DATA																
CONDENSING UNIT MODEL NO.		**THGF24S41S3**														
INDOOR COIL MODEL NO.		**AHX30**														
CONDENSING ENTERING AIR TEMPERATURE	**IDCFM**	600					800					1000				
	ID DB (°F)	80	80	75	80	80	80	80	75	80	80	80	80	75	80	80
	ID WB (°F)	57	62	62	67	72	57	62	62	67	72	57	62	62	67	72
65	T.C.	21.7	23.6	23.5	25.2	26.6	23.4	24.1	24.3	26.0	27.2	25.1	24.6	25.1	26.9	27.8
	S.C.	21.4	19.4	16.6	16.2	13.7	23.1	21.8	18.5	17.9	14.3	24.8	24.3	20.5	19.5	15.0
	KW	1.20	1.22	1.22	1.23	1.21	1.28	1.29	1.31	1.29	1.28	1.36	1.35	1.39	1.35	1.35
75	T.C.	20.8	22.3	22.2	24.0	25.7	22.4	23.0	23.0	24.8	26.3	24.1	23.8	23.8	25.7	26.9
	S.C.	20.5	18.8	16.0	15.7	13.1	22.1	21.1	18.0	17.5	13.9	23.8	23.5	19.9	19.2	14.6
	KW	1.36	1.37	1.37	1.38	1.39	1.45	1.45	1.45	1.46	1.47	1.53	1.53	1.53	1.53	1.54
85	T.C.	19.8	20.9	20.9	22.9	24.8	21.4	21.9	21.6	23.7	25.5	23.1	22.9	22.4	24.5	26.1
	S.C.	19.5	18.2	15.4	15.3	12.5	21.2	20.4	17.4	17.1	13.4	22.8	22.6	19.4	18.9	14.3
	KW	1.52	1.53	1.53	1.54	1.57	1.61	1.61	1.59	1.62	1.65	1.70	1.70	1.66	1.71	1.73
95	T.C.	18.8	19.5	19.6	21.8	23.9	20.5	20.8	20.3	22.5	24.6	22.1	22.1	21.1	23.2	25.3
	S.C.	18.6	17.5	14.8	14.8	11.9	20.2	19.7	16.8	16.7	12.9	21.8	21.8	18.8	18.7	14.0
	KW	1.67	1.68	1.68	1.69	1.75	1.77	1.78	1.74	1.79	1.83	1.87	1.87	1.79	1.89	1.92
105	T.C.	17.7	18.0	18.0	20.2	22.4	19.2	19.3	18.7	20.9	23.1	20.7	20.7	19.4	21.6	23.7
	S.C.	17.4	16.8	14.1	14.2	11.3	18.9	18.7	16.1	16.1	12.4	20.5	20.5	18.2	18.1	13.5
	KW	1.86	1.87	1.87	1.90	1.96	1.97	1.97	1.94	2.00	2.04	2.07	2.07	2.02	2.09	2.12
115	T.C.	16.5	16.4	16.4	18.7	20.9	17.9	17.9	17.0	19.3	21.6	19.4	19.4	17.7	20.0	22.2
	S.C.	16.3	16.1	13.4	13.5	10.8	17.7	17.6	15.4	15.5	11.9	19.2	19.2	17.5	17.5	13.0
	KW	2.05	2.05	2.05	2.11	2.16	2.16	2.16	2.15	2.21	2.24	2.26	2.26	2.24	2.30	2.32
125	T.C.	15.3	14.8	14.8	17.1	19.4	16.7	16.4	15.4	17.7	20.0	18.1	18.1	16.1	18.3	20.6
	S.C.	15.1	14.8	12.7	12.9	10.2	16.5	16.4	14.7	14.9	11.3	17.8	17.8	16.1	16.9	12.5
	KW	2.25	2.24	2.24	2.33	2.37	2.35	2.35	2.35	2.42	2.45	2.46	2.46	2.46	2.51	2.52
NOTE: ALL CAPACITIES INCLUDE INDOOR FAN HEAT. KW VALUES ARE FOR THE SYSTEM (OUTDOOR + INDOOR).																

Multipliers for determining the performance with other indoor sections.

NOTE: For dry bulb temperatures different than those listed (between 73-87 °F), sensible capacity increases by 1060 BTUH per 1000 CFM per degree above the listed temperature and decreases by 1060 BTUH per 1000 CFM per degree below the listed temperature.

Air Handler	Coil	T.C.	S.C.	KW
–	FC/MC/PC32	0.99	0.98	1.09
–	FC/MC/PC35	0.99	0.98	1.09
–	FC/MC/PC37	1.00	0.99	1.09
–	FC/MC/PC43	1.00	0.99	1.09
AHE24B	–	1.00	1.01	1.00
AHE30B	–	1.00	1.01	1.00
AHR24B	–	0.99	0.96	1.04
AHV24B	–	1.00	0.96	0.99
AHV30B	–	1.00	0.99	1.00
AHV36C	–	1.01	1.01	0.98
AV*36	–	1.01	0.99	0.97
MV12B	FC/MC35B	1.01	1.01	1.00
MV12B	FC/MC43B	1.01	1.02	0.99
MX12B	FC/MC35B	1.01	1.01	0.96
MX12B	FC/MC43B	1.01	0.99	0.97

Continued on next page.

Furnace	Coil	T.C.	S.C.	KW
T*(8,L)V*A12	FC/MC/PC32A	1.00	0.98	1.00
T*(8,L)V*A12	FC/MC/PC37A	1.01	1.02	1.00
T*(8,L)V*B12	FC/MC/PC35B	1.00	1.00	0.99
T*(8,L)V*B12	FC/MC/PC43B	1.01	1.02	0.99
T*(8,L)V*C16	FC/MC/PC35C	1.01	1.01	0.99
T*(8,L)V*C16	FC/MC/PC43C	1.02	1.02	0.98
T*(8,L)V*C20	FC/MC/PC35C	1.00	0.99	0.98
T*(8,L)V*C20	FC/MC/PC43C	1.01	0.99	0.98
T*(8,L)X*A12	FC/MC/PC32A	1.01	1.01	0.98
T*(8,L)X*A12	FC/MC/PC37A	1.03	1.06	0.97
T*(8,L)X*B12	FC/MC/PC35B	1.02	1.05	0.97
T*(8,L)X*B12	FC/MC/PC43B	1.04	1.08	0.98
T*(8,L)X*C16	FC/MC/PC35C	1.03	1.06	0.98
T*(8,L)X*C16	FC/MC/PC43C	1.03	1.07	0.97
T*(8,L)X*C20	FC/MC/PC35C	1.02	1.06	1.00
T*(8,L)X*C20	FC/MC/PC43C	1.02	1.02	0.98
T*9V*A10	FC/MC/PC32A	1.00	0.99	1.04
T*9V*A10	FC/MC/PC37A	1.00	1.01	1.04
T*9(C,V)*B12	FC/MC/PC35B	1.00	1.00	1.01
T*9(C,V)*B12	FC/MC/PC43B	1.01	1.02	1.01
T*9(C,V)*C16	FC/MC/PC35C	1.02	1.07	1.01
T*9(C,V)*C16	FC/MC/PC43C	1.01	1.02	1.00
T*9(C,V)*C20	FC/MC/PC35C	1.00	0.98	0.98

Furnace	Coil	T.C.	S.C.	KW
T*9(C,V)*C20	FC/MC/PC43C	1.03	1.08	1.01
T*9X*A10	FC/MC/PC32A	1.00	0.97	1.02
T*9X*A10	FC/MC/PC37A	1.00	0.98	1.02
T*9X*B12	FC/MC/PC35B	1.01	1.01	0.98
T*9X*B12	FC/MC/PC43B	1.02	1.02	0.98
T*9X*C16	FC/MC/PC35C	1.01	1.01	0.98
T*9X*C16	FC/MC/PC43C	1.02	1.02	0.98
T*9X*C20	FC/MC/PC35C	1.01	1.01	0.98
T*9X*C20	FC/MC/PC43C	1.02	1.02	0.99
Y*(8,L)C*A12	FC/MC/PC32A	1.00	0.98	1.00
Y*(8,L)C*A12	FC/MC/PC37A	1.01	1.02	1.00
Y*(8,L)C*B12	FC/MC/PC35B	1.00	1.00	0.99
Y*(8,L)C*B12	FC/MC/PC43B	1.01	1.02	0.99
Y*(8,L)C*C16	FC/MC/PC35C	1.01	1.01	0.99
Y*(8,L)C*C16	FC/MC/PC43C	1.02	1.02	0.98
Y*(8,L)C*C20	FC/MC/PC35C	1.00	0.99	0.98
Y*(8,L)C*C20	FC/MC/PC43C	1.01	0.99	0.98
Y*9C*B12	FC/MC/PC35B	1.00	1.00	1.01
Y*9C*B12	FC/MC/PC43B	1.01	1.02	1.01
Y*9C*C16	FC/MC/PC35C	1.02	1.07	1.01
Y*9C*C16	FC/MC/PC43C	1.01	1.02	1.00
Y*9C*C20	FC/MC/PC35C	1.00	0.98	0.98
Y*9C*C20	FC/MC/PC43C	1.03	1.08	1.01

COOLING PERFORMANCE DATA																
CONDENSING UNIT MODEL NO.		THGF30S41S3														
INDOOR COIL MODEL NO.		AHX36														
CONDENSING ENTERING AIR TEMPERATURE	IDCFM	800					1000					1200				
	ID DB (°F)	80	80	75	80	80	80	80	75	80	80	80	80	75	80	80
	ID WB (°F)	57	62	62	67	72	57	62	62	67	72	57	62	62	67	72
65	T.C.	28.4	30.2	30.1	33.0	34.3	30.2	31.2	31.2	33.5	34.8	32.0	32.2	32.2	34.0	35.3
	S.C.	28.4	26.3	22.5	22.3	18.2	30.2	29.6	24.6	23.7	18.7	32.0	32.2	26.8	25.1	19.1
	KW	1.49	1.53	1.53	1.55	1.52	1.60	1.63	1.63	1.60	1.59	1.70	1.74	1.74	1.65	1.66
75	T.C.	27.3	28.7	28.7	31.5	33.2	29.0	29.7	29.6	32.1	33.7	30.7	30.6	30.6	32.7	34.2
	S.C.	27.3	25.7	21.8	21.6	17.7	29.0	28.4	23.9	23.2	18.2	30.7	30.6	26.1	24.8	18.7
	KW	1.67	1.69	1.69	1.72	1.70	1.76	1.78	1.78	1.78	1.77	1.86	1.86	1.86	1.84	1.85
85	T.C.	26.2	27.2	27.2	30.0	32.2	27.8	28.1	28.1	30.7	32.6	29.5	29.0	29.0	31.4	33.1
	S.C.	26.2	25.0	21.1	21.0	17.1	27.8	27.3	23.3	22.8	17.7	29.5	29.0	25.4	24.6	18.4
	KW	1.84	1.86	1.86	1.88	1.88	1.93	1.92	1.92	1.95	1.96	2.03	1.99	1.99	2.02	2.03
95	T.C.	25.1	25.8	25.8	28.6	31.1	26.7	26.6	26.6	29.3	31.5	28.2	27.3	27.3	30.1	32.0
	S.C.	25.1	24.4	20.4	20.4	16.5	26.7	26.1	22.6	22.4	17.3	28.2	27.3	24.7	24.4	18.1
	KW	2.01	2.02	2.02	2.05	2.06	2.10	2.07	2.06	2.13	2.14	2.19	2.11	2.11	2.20	2.21
105	T.C.	23.7	23.8	23.9	26.9	29.5	25.2	25.1	24.6	27.6	29.9	26.7	26.3	25.4	28.2	30.3
	S.C.	23.7	23.4	19.6	19.7	15.7	25.2	25.1	21.7	21.7	16.6	26.7	26.3	23.9	23.7	17.5
	KW	2.22	2.23	2.23	2.27	2.30	2.31	2.29	2.29	2.35	2.37	2.40	2.36	2.36	2.43	2.44
115	T.C.	22.2	21.9	21.9	25.2	27.8	23.7	23.6	22.7	25.8	28.3	25.2	25.2	23.4	26.4	28.7
	S.C.	22.2	21.9	18.7	19.0	15.0	23.7	23.6	20.9	21.0	16.0	25.2	25.2	23.1	23.0	17.0
	KW	2.44	2.43	2.43	2.50	2.53	2.52	2.52	2.52	2.57	2.60	2.61	2.61	2.61	2.65	2.67
125	T.C.	20.8	19.9	20.0	23.5	26.2	22.2	22.1	20.7	24.0	26.7	23.7	24.2	21.5	24.5	27.1
	S.C.	20.8	19.9	17.8	18.3	14.2	22.2	22.1	20.1	20.3	15.3	23.7	24.2	21.5	22.3	16.4
	KW	2.65	2.64	2.64	2.72	2.76	2.74	2.75	2.75	2.80	2.83	2.82	2.86	2.85	2.88	2.90
NOTE: ALL CAPACITIES INCLUDE INDOOR FAN HEAT. KW VALUES ARE FOR THE SYSTEM (OUTDOOR + INDOOR).																

Multipliers for determining the performance with other indoor sections.

NOTE: For dry bulb temperatures different than those listed (between 73-87 °F), sensible capacity increases by 1060 BTUH per 1000 CFM per degree above the listed temperature and decreases by 1060 BTUH per 1000 CFM per degree below the listed temperature.

Air Handler	Coil	T.C.	S.C.	KW
–	FC/MC/PC37	0.98	0.96	1.10
–	FC/MC/PC43	0.98	0.96	1.10
AHE36C	–	1.00	0.98	1.00
AHR36B	–	0.98	0.98	1.11
AHV36C	–	0.98	0.93	1.00
AV*36	–	1.00	0.98	0.99
MV12B	FC/MC43B	1.00	0.98	1.02
MV16C	FC/MC43C	1.00	0.98	1.01
MX12B	FC/MC43B	1.01	1.03	1.03
MX16C	FC/MC43C	1.00	0.99	0.99

Furnace	Coil	T.C.	S.C.	KW
T*(8,L)V*A12	FC/MC/PC37A	1.00	0.96	1.05
T*(8,L)V*B12	FC/MC/PC43B	1.01	0.97	1.05
T*(8,L)V*C16	FC/MC/PC43C	1.00	0.99	1.02
T*(8,L)V*C20	FC/MC/PC43C	1.00	1.00	1.00
T*(8,L)X*A12	FC/MC/PC37A	1.01	1.01	1.01
T*(8,L)X*B12	FC/MC/PC43B	1.01	1.00	1.01
T*(8,L)X*C16	FC/MC/PC43C	1.00	1.00	1.00
T*9(C,V)*B12	FC/MC/PC43B	1.01	0.96	1.05
T*9(C,V)*C16	FC/MC/PC43C	1.00	0.97	1.04
T*9(C,V)*C20	FC/MC/PC43C	1.00	0.99	1.02
T*9X*B12	FC/MC/PC43B	1.01	1.00	1.02
T*9X*C16	FC/MC/PC43C	1.00	0.99	1.02
Y*(8,L)C*A12	FC/MC/PC37A	1.00	0.96	1.05
Y*(8,L)C*B12	FC/MC/PC43B	1.01	0.97	1.05
Y*(8,L)C*C16	FC/MC/PC43C	1.00	0.99	1.02
Y*(8,L)C*C20	FC/MC/PC43C	1.00	1.00	1.00
Y*9C*B12	FC/MC/PC43B	1.01	0.96	1.05
Y*9C*C16	FC/MC/PC43C	1.00	0.97	1.04
Y*9C*C20	FC/MC/PC43C	1.00	0.99	1.02

COOLING PERFORMANCE DATA

CONDENSING UNIT MODEL NO.	THGF36S41S4														
INDOOR COIL MODEL NO.	AHE42D														
CONDENSING ENTERING AIR TEMPERATURE	IDCFM	1000					1200					1400				
	ID DB (°F)	80	80	75	80	80	80	80	75	80	80	80	80	75	80	80
	ID WB (°F)	57	62	62	67	72	57	62	62	67	72	57	62	62	67	72
65	T.C.	37.2	39.5	39.5	43.2	45.5	39.3	41.1	41.0	44.1	46.4	41.4	42.7	42.5	45.1	47.3
	S.C.	36.9	32.5	27.9	27.8	23.2	39.0	36.0	30.2	29.8	24.2	41.0	39.6	32.5	31.8	25.3
	KW	2.11	2.18	2.18	2.19	2.19	2.22	2.27	2.26	2.27	2.30	2.32	2.36	2.34	2.35	2.40
75	T.C.	34.9	36.8	36.8	40.6	43.4	37.0	38.1	38.2	41.5	44.2	39.0	39.5	39.5	42.5	44.9
	S.C.	34.7	31.3	26.7	26.6	22.0	36.7	34.3	28.9	28.7	23.1	38.7	37.3	31.2	30.7	24.2
	KW	2.29	2.34	2.34	2.38	2.41	2.40	2.43	2.43	2.46	2.49	2.51	2.52	2.52	2.55	2.58
85	T.C.	32.7	34.0	34.1	38.0	41.3	34.7	35.2	35.3	39.0	41.9	36.7	36.3	36.4	39.9	42.4
	S.C.	32.4	30.0	25.5	25.5	20.8	34.4	32.5	27.7	27.5	21.9	36.4	35.0	29.9	29.5	23.0
	KW	2.47	2.50	2.50	2.56	2.62	2.58	2.59	2.60	2.66	2.69	2.70	2.67	2.69	2.75	2.75
95	T.C.	30.5	31.3	31.4	35.4	39.2	32.4	32.2	32.4	36.4	39.6	34.3	33.0	33.4	37.4	40.0
	S.C.	30.2	28.8	24.3	24.3	19.6	32.2	30.8	26.4	26.4	20.7	34.1	32.8	28.5	28.4	21.9
	KW	2.65	2.67	2.67	2.74	2.83	2.77	2.75	2.77	2.85	2.88	2.89	2.83	2.87	2.95	2.93
105	T.C.	27.5	28.4	28.2	32.2	36.2	29.6	29.7	28.9	33.1	36.8	31.7	31.0	29.5	34.0	37.4
	S.C.	27.3	27.1	22.9	23.0	18.4	29.4	28.9	24.9	25.1	19.6	31.5	30.8	27.0	27.1	20.8
	KW	2.80	2.81	2.80	2.92	3.01	2.92	2.90	2.91	3.02	3.09	3.03	2.99	3.02	3.13	3.16
115	T.C.	24.6	25.5	25.0	29.0	33.2	26.9	27.3	25.4	29.8	34.0	29.1	29.0	25.7	30.6	34.9
	S.C.	24.4	25.3	21.5	21.7	17.3	26.6	27.1	23.5	23.8	18.5	28.9	28.8	25.4	25.8	19.7
	KW	2.96	2.95	2.93	3.10	3.20	3.07	3.05	3.04	3.20	3.29	3.18	3.15	3.16	3.30	3.39
125	T.C.	21.7	22.6	21.8	25.8	30.1	24.1	24.8	21.9	26.5	31.2	26.5	27.0	21.9	27.2	32.3
	S.C.	21.5	22.6	20.1	20.4	16.1	23.9	24.8	21.9	22.5	17.4	26.3	26.8	21.9	24.5	18.7
	KW	3.11	3.09	3.06	3.28	3.38	3.22	3.20	3.18	3.38	3.50	3.33	3.31	3.31	3.48	3.61

NOTE: ALL CAPACITIES INCLUDE INDOOR FAN HEAT. KW VALUES ARE FOR THE SYSTEM (OUTDOOR + INDOOR).

Multipliers for determining the performance with other indoor sections.

NOTE: For dry bulb temperatures different than those listed (between 73-87 °F), sensible capacity increases by 1060 BTUH per 1000 CFM per degree above the listed temperature and decreases by 1060 BTUH per 1000 CFM per degree below the listed temperature.

Air Handler	Coil	T.C.	S.C.	KW
–	FC/MC/PC37	0.98	0.98	1.09
–	FC/MC/PC43	0.98	0.98	1.09
–	FC/MC/PC48	0.99	0.99	1.10
–	FC/MC/PC60	1.00	0.99	1.09
–	UC48	1.00	0.99	1.09
–	UC60	0.98	0.97	1.09
AHE36C	–	1.02	1.04	1.01
AHE42D	–	1.00	1.00	1.00
AHE48D	–	1.00	1.00	1.00
AHR36B	–	1.00	0.99	1.10
AHR42C	–	1.00	1.00	1.08
AHV36C	–	1.02	1.02	1.00
AHV42D	–	1.02	1.03	0.99
AHV48D	–	1.02	1.03	0.99

Air Handler	Coil	T.C.	S.C.	KW
AV*36	–	1.01	0.99	1.03
AV*48	–	1.03	1.04	1.01
MV12B	FC/MC43B	1.00	0.99	1.03
MV12D	FC/MC48D	1.02	1.01	1.00
MV12D	FC/MC60D	1.01	0.99	1.02
MV16C	FC/MC43C	1.01	0.99	1.02
MV16C	FC/MC48C	1.01	1.00	1.02
MV16C	FC60C	1.03	1.02	1.01
MX12B	FC/MC43B	1.00	0.99	1.04
MX12D	FC/MC48D	1.01	1.00	1.03
MX12D	FC/MC60D	1.03	1.05	1.02
MX16C	FC/MC43C	1.00	0.98	1.00
MX16C	FC/MC48C	1.02	1.01	1.00
MX16C	FC60C	1.03	1.02	0.99

Continued on next page.

Furnace	Coil	T.C.	S.C.	KW
T*(8,L)V*B12	FC/MC/PC43B	1.00	1.01	1.08
T*(8,L)V*C16	FC/MC/PC43C	1.00	0.99	1.03
T*(8,L)V*C16	FC/MC/PC48C	1.01	1.00	1.03
T*(8,L)V*C16	FC/PC60C	1.02	1.02	1.01
T*(8,L)V*C16	UC48C	1.02	1.01	1.03
T*(8,L)V*C16	UC60C	1.00	0.99	1.01
T*(8,L)V*C20	FC/MC/PC43C	1.00	0.99	1.03
T*(8,L)V*C20	FC/MC/PC48C	1.01	1.00	1.02
T*(8,L)V*C20	FC/PC60C	1.02	1.02	1.02
T*(8,L)V*C20	UC48C	1.02	1.01	1.01
T*(8,L)V*C20	UC60C	1.00	0.99	1.01
T*(8,L)X*A12	FC/MC/PC37A	1.02	1.03	1.04
T*(8,L)X*B12	FC/MC/PC43B	1.01	1.04	1.04
T*(8,L)X*C16	FC/MC/PC43C	1.01	1.00	1.00
T*(8,L)X*C16	FC/MC/PC48C	1.02	1.01	1.00
T*(8,L)X*C16	FC/PC60C	1.03	1.02	0.99
T*(8,L)X*C16	UC48C	1.02	1.02	1.00
T*(8,L)X*C16	UC60C	1.01	1.00	0.99
T*(8,L)X*C20	FC/MC/PC43C	1.01	0.99	1.02
T*(8,L)X*C20	FC/MC/PC48C	1.02	1.05	1.01
T*(8,L)X*C20	FC/PC60C	1.03	1.05	1.01
T*(8,L)X*C20	UC48C	1.04	1.05	1.01
T*(8,L)X*C20	UC60C	1.02	1.04	1.02
T*9(C,V)*B12	FC/MC/PC43B	0.99	0.98	1.07
T*9(C,V)*C16	FC/MC/PC43C	1.00	0.99	1.06
T*9(C,V)*C16	FC/MC/PC48C	1.01	1.00	1.04
T*9(C,V)*C16	FC/PC60C	1.02	1.01	1.05
T*9(C,V)*C16	UC48C	1.01	1.00	1.04
T*9(C,V)*C16	UC60C	1.00	0.99	1.05
T*9(C,V)*C20	FC/MC/PC43C	1.00	0.99	1.04
T*9(C,V)*C20	FC/MC/PC48C	1.02	1.05	1.06
T*9(C,V)*C20	FC/PC60C	1.03	1.06	1.05
T*9(C,V)*C20	UC48C	1.03	1.06	1.06
T*9(C,V)*C20	UC60C	1.02	1.05	1.06
T*9(C,V)*D20	FC/MC/PC48D	1.01	1.00	1.04
T*9(C,V)*D20	FC/MC/PC60D	1.02	1.01	1.03
T*9(C,V)*D20	UC48D	1.01	1.01	1.03
T*9(C,V)*D20	UC60D	1.00	0.99	1.03
T*9X*B12	FC/MC/PC43B	1.01	1.02	1.05
T*9X*C16	FC/MC/PC43C	1.01	1.02	1.04

Furnace	Coil	T.C.	S.C.	KW
T*9X*C16	FC/MC/PC48C	1.02	1.04	1.03
T*9X*C16	FC/PC60C	1.03	1.07	1.03
T*9X*C16	UC48C	1.03	1.05	1.03
T*9X*C16	UC60C	1.02	1.05	1.02
T*9X*C20	FC/MC/PC43C	1.01	0.99	1.02
T*9X*C20	FC/MC/PC48C	1.01	1.00	1.03
T*9X*C20	FC/PC60C	1.02	1.02	1.02
T*9X*C20	UC48C	1.02	1.01	1.02
T*9X*C20	UC60C	1.01	0.99	1.02
T*9X*D20	FC/MC/PC48D	1.01	1.01	1.02
T*9X*D20	FC/MC/PC60D	1.04	1.07	1.01
T*9X*D20	UC48D	1.02	1.01	1.01
T*9X*D20	UC60D	1.03	1.05	1.00
Y*(8,L)C*A12	FC/MC/PC37A	0.99	0.98	1.07
Y*(8,L)C*B12	FC/MC/PC43B	1.00	1.01	1.08
Y*(8,L)C*C16	FC/MC/PC43C	1.00	0.99	1.03
Y*(8,L)C*C16	FC/MC/PC48C	1.01	1.00	1.03
Y*(8,L)C*C16	FC/PC60C	1.02	1.02	1.01
Y*(8,L)C*C16	UC48C	1.02	1.01	1.03
Y*(8,L)C*C16	UC60C	1.00	0.99	1.01
Y*(8,L)C*C20	FC/MC/PC43C	1.00	0.99	1.03
Y*(8,L)C*C20	FC/MC/PC48C	1.01	1.00	1.02
Y*(8,L)C*C20	FC/PC60C	1.02	1.02	1.02
Y*(8,L)C*C20	UC48C	1.02	1.01	1.01
Y*(8,L)C*C20	UC60C	1.00	0.99	1.01
Y*9C*B12	FC/MC/PC43B	0.99	0.98	1.07
Y*9C*C16	FC/MC/PC43C	1.00	0.99	1.06
Y*9C*C16	FC/MC/PC48C	1.01	1.00	1.04
Y*9C*C16	FC/PC60C	1.02	1.01	1.05
Y*9C*C16	UC48C	1.01	1.00	1.04
Y*9C*C16	UC60C	1.00	0.99	1.05
Y*9C*C20	FC/MC/PC43C	1.00	0.99	1.04
Y*9C*C20	FC/MC/PC48C	1.02	1.05	1.06
Y*9C*C20	FC/PC60C	1.03	1.06	1.05
Y*9C*C20	UC48C	1.03	1.06	1.06
Y*9C*C20	UC60C	1.02	1.05	1.06
Y*9C*D20	FC/MC/PC48D	1.01	1.00	1.04
Y*9C*D20	FC/MC/PC60D	1.02	1.01	1.03
Y*9C*D20	UC48D	1.01	1.01	1.03
Y*9C*D20	UC60D	1.00	0.99	1.03

COOLING PERFORMANCE DATA																
CONDENSING UNIT MODEL NO.		**THGF42S41S3**														
INDOOR COIL MODEL NO.		**AHX60**														
CONDENSING ENTERING AIR TEMPERATURE	**IDCFM**	1155					1355					1555				
	ID DB (°F)	80	80	75	80	80	80	80	75	80	80	80	80	75	80	80
	ID WB (°F)	57	62	62	67	72	57	62	62	67	72	57	62	62	67	72
65	T.C.	38.5	40.6	41.2	44.8	48.2	40.3	41.9	41.0	45.8	49.3	42.2	43.3	40.7	46.7	50.4
	S.C.	38.5	35.5	30.5	30.2	24.7	40.3	39.2	32.0	32.1	25.8	42.2	42.9	33.6	33.9	26.8
	KW	2.20	2.21	2.21	2.23	2.36	2.27	2.28	2.28	2.35	2.44	2.34	2.35	2.34	2.47	2.52
75	T.C.	36.9	38.6	39.0	42.8	46.3	38.7	39.7	39.1	43.7	47.3	40.6	40.8	39.2	44.6	48.3
	S.C.	36.9	34.8	29.6	29.4	23.8	38.7	37.7	31.3	31.3	24.9	40.6	40.6	33.0	33.2	26.0
	KW	2.48	2.49	2.49	2.53	2.62	2.57	2.57	2.57	2.64	2.71	2.65	2.65	2.64	2.74	2.80
85	T.C.	35.3	36.7	36.9	40.8	44.3	37.2	37.5	37.2	41.6	45.3	39.0	38.3	37.6	42.4	46.2
	S.C.	35.3	34.0	28.6	28.6	23.0	37.2	36.2	30.5	30.5	24.1	39.0	38.3	32.5	32.4	25.1
	KW	2.76	2.78	2.78	2.84	2.88	2.86	2.86	2.86	2.92	2.98	2.96	2.95	2.94	3.01	3.08
95	T.C.	33.7	34.8	34.7	38.8	42.3	35.6	35.3	35.4	39.6	43.2	37.4	35.8	36.1	40.3	44.1
	S.C.	33.7	33.3	27.7	27.7	22.2	35.6	34.7	29.8	29.7	23.2	37.4	35.8	31.9	31.6	24.3
	KW	3.04	3.06	3.06	3.14	3.14	3.15	3.16	3.15	3.21	3.25	3.26	3.25	3.24	3.29	3.36
105	T.C.	31.7	32.2	31.4	35.9	39.8	33.4	33.3	32.3	36.7	40.5	35.1	34.3	33.1	37.5	41.3
	S.C.	31.7	31.6	26.3	26.6	21.1	33.4	33.1	28.5	28.6	22.2	35.1	34.3	30.7	30.6	23.3
	KW	3.35	3.36	3.37	3.40	3.47	3.46	3.46	3.46	3.50	3.57	3.58	3.55	3.54	3.60	3.67
115	T.C.	29.7	29.7	28.2	33.0	37.2	31.2	31.2	29.2	33.8	37.8	32.7	32.7	30.2	34.7	38.5
	S.C.	29.7	29.7	24.9	25.4	20.1	31.2	31.2	27.2	27.5	21.2	32.7	32.7	29.5	29.6	22.3
	KW	3.66	3.67	3.69	3.66	3.80	3.78	3.75	3.76	3.79	3.89	3.89	3.84	3.83	3.92	3.98
125	T.C.	27.6	27.1	25.0	30.1	34.6	29.0	29.2	26.1	31.0	35.1	30.4	31.2	27.2	31.9	35.6
	S.C.	27.6	27.1	23.6	24.3	19.1	29.0	29.2	25.9	26.4	20.2	30.4	31.2	27.2	28.6	21.4
	KW	3.97	3.97	4.01	3.92	4.13	4.09	4.05	4.07	4.08	4.21	4.21	4.13	4.13	4.23	4.29
NOTE: ALL CAPACITIES INCLUDE INDOOR FAN HEAT. KW VALUES ARE FOR THE SYSTEM (OUTDOOR + INDOOR).																

Multipliers for determining the performance with other indoor sections.

NOTE: For dry bulb temperatures different than those listed (between 73-87 °F), sensible capacity increases by 1060 BTUH per 1000 CFM per degree above the listed temperature and decreases by 1060 BTUH per 1000 CFM per degree below the listed temperature.

Air Handler	Coil	T.C.	S.C.	KW
–	FC/MC/PC48	1.00	0.99	1.07
–	FC/MC/PC60	1.01	1.00	1.08
–	FC/MC62	1.00	1.01	1.07
AHE42D	–	1.02	1.02	1.00
AHE48D	–	1.02	1.01	1.00
AHE60D	–	1.02	1.04	0.99
AHR42C	–	1.01	1.02	1.07
AHR48D	–	0.98	0.96	1.07
AHR60D	–	1.00	1.00	1.06
AHV48D	–	1.00	0.94	0.97
AHV60D	–	1.01	1.01	1.00
MV16C	FC/MC48C	1.02	1.01	1.02
MV16C	FC60C	1.02	1.02	1.02
MV20D	FC/MC48D	1.02	1.04	1.00
MV20D	FC/MC60D	1.02	1.02	1.00
MV20D	FC/MC62D	1.02	1.03	1.01
MX16C	FC/MC48C	1.02	1.02	0.99
MX16C	FC60C	1.02	1.02	0.99
MX20D	FC/MC48D	1.02	1.02	0.99
MX20D	FC/MC60D	1.04	1.06	0.98
MX20D	FC/MC62D	1.04	1.06	0.99

Continued on next page.

Furnace	Coil	T.C.	S.C.	KW
T*(8,L)V*C16	FC/MC/PC48C	1.01	0.98	1.03
T*(8,L)V*C16	FC/MC62D	1.01	1.02	1.03
T*(8,L)V*C16	FC/PC60C	1.02	1.01	1.03
T*(8,L)V*C20	FC/MC/PC48C	1.01	1.00	1.03
T*(8,L)V*C20	FC/MC62D	1.01	1.02	1.01
T*(8,L)V*C20	FC/PC60C	1.02	1.02	1.01
T*(8,L)X*C16	FC/MC/PC48C	1.02	1.02	0.99
T*(8,L)X*C16	FC/MC62D	1.02	1.03	0.99
T*(8,L)X*C16	FC/PC60C	1.02	1.02	0.99
T*(8,L)X*C20	FC/MC/PC48C	1.02	1.04	1.00
T*(8,L)X*C20	FC/MC62D	1.04	1.06	1.01
T*(8,L)X*C20	FC/PC60C	1.04	1.06	1.00
T*9(C,V)*C16	FC/MC/PC48C	1.01	1.00	1.04
T*9(C,V)*C16	FC/MC62D	1.00	1.02	1.05
T*9(C,V)*C16	FC/PC60C	1.01	1.00	1.06
T*9(C,V)*C20	FC/MC/PC48C	1.01	1.00	1.05
T*9(C,V)*C20	FC/MC62D	1.01	1.02	1.04
T*9(C,V)*C20	FC/PC60C	1.01	1.01	1.04
T*9(C,V)*D20	FC/MC/PC48D	1.01	1.00	1.03
T*9(C,V)*D20	FC/MC/PC60D	1.02	1.01	1.03
T*9(C,V)*D20	FC/MC62D	1.01	1.02	1.03
T*9X*C16	FC/MC/PC48C	1.01	1.00	1.01
T*9X*C16	FC/MC62D	1.01	1.02	1.01

Furnace	Coil	T.C.	S.C.	KW
T*9X*C16	FC/PC60C	1.02	1.02	1.02
T*9X*C20	FC/MC/PC48C	1.02	1.01	1.01
T*9X*C20	FC/MC62D	1.02	1.03	1.01
T*9X*C20	FC/PC60C	1.02	1.02	1.01
T*9X*D20	FC/MC/PC48D	1.02	1.01	1.01
T*9X*D20	FC/MC/PC60D	1.04	1.07	0.99
T*9X*D20	FC/MC62D	1.02	1.03	1.01
Y*(8,L)C*C16	FC/MC/PC48C	1.01	0.98	1.03
Y*(8,L)C*C16	FC/MC62D	1.01	1.02	1.03
Y*(8,L)C*C16	FC/PC60C	1.02	1.01	1.03
Y*(8,L)C*C20	FC/MC/PC48C	1.01	1.00	1.03
Y*(8,L)C*C20	FC/MC62D	1.01	1.02	1.01
Y*(8,L)C*C20	FC/PC60C	1.02	1.02	1.01
Y*9C*C16	FC/MC/PC48C	1.01	1.00	1.04
Y*9C*C16	FC/MC62D	1.00	1.02	1.05
Y*9C*C16	FC/PC60C	1.01	1.00	1.06
Y*9C*C20	FC/MC/PC48C	1.01	1.00	1.05
Y*9C*C20	FC/MC62D	1.01	1.02	1.04
Y*9C*C20	FC/PC60C	1.01	1.01	1.04
Y*9C*D20	FC/MC/PC48D	1.01	1.00	1.03
Y*9C*D20	FC/MC/PC60D	1.02	1.01	1.03
Y*9C*D20	FC/MC62D	1.01	1.02	1.03

COOLING PERFORMANCE DATA

CONDENSING UNIT MODEL NO.	THGF48S41S3														
INDOOR COIL MODEL NO.	F6FP060														
CONDENSING ENTERING AIR TEMPERATURE	IDCFM	1400					1600					1800				
	ID DB (°F)	80	80	75	80	80	80	80	75	80	80	80	80	75	80	80
	ID WB (°F)	57	62	62	67	72	57	62	62	67	72	57	62	62	67	72
65	T.C.	46.3	48.5	48.5	53.1	57.3	48.0	50.1	49.9	53.5	58.0	49.8	51.6	51.4	53.9	58.7
	S.C.	46.3	42.2	35.8	35.4	29.2	48.0	45.7	38.1	36.7	29.9	49.8	49.3	40.4	38.0	30.6
	KW	2.67	2.73	2.72	2.76	2.74	2.77	2.80	2.80	2.81	2.80	2.87	2.87	2.87	2.86	2.87
75	T.C.	44.4	46.1	46.1	50.7	55.0	46.2	47.4	47.3	51.3	55.8	48.0	48.7	48.5	51.8	56.5
	S.C.	44.4	41.2	34.8	34.4	28.2	46.2	44.2	37.0	36.0	29.0	48.0	47.1	39.2	37.5	29.8
	KW	3.00	3.04	3.04	3.05	3.09	3.10	3.12	3.12	3.13	3.16	3.20	3.20	3.20	3.21	3.23
85	T.C.	42.4	43.6	43.6	48.3	52.7	44.3	44.7	44.7	49.0	53.5	46.2	45.7	45.7	49.8	54.3
	S.C.	42.4	40.2	33.7	33.5	27.1	44.3	42.6	35.8	35.3	28.0	46.2	45.0	38.0	37.0	29.0
	KW	3.33	3.35	3.35	3.34	3.44	3.43	3.44	3.44	3.45	3.52	3.54	3.53	3.53	3.56	3.60
95	T.C.	40.5	41.1	41.2	45.9	50.5	42.5	42.0	42.0	46.8	51.3	44.4	42.8	42.8	47.7	52.1
	S.C.	40.5	39.2	32.7	32.6	26.0	42.5	41.0	34.7	34.6	27.1	44.4	42.8	36.8	36.5	28.2
	KW	3.66	3.66	3.66	3.63	3.80	3.76	3.76	3.76	3.77	3.88	3.87	3.86	3.86	3.91	3.97
105	T.C.	37.9	38.3	37.6	42.7	47.5	39.7	39.5	38.5	43.5	48.2	41.5	40.7	39.3	44.3	48.8
	S.C.	37.9	37.4	31.1	31.4	24.8	39.7	39.1	33.2	33.3	25.9	41.5	40.7	35.3	35.3	26.9
	KW	4.05	4.05	4.04	4.10	4.22	4.17	4.17	4.13	4.21	4.30	4.29	4.28	4.23	4.33	4.38
115	T.C.	35.2	35.5	34.0	39.5	44.6	36.9	37.1	34.9	40.2	45.1	38.7	38.7	35.8	41.0	45.5
	S.C.	35.2	35.5	29.6	30.1	23.6	36.9	37.1	31.7	32.1	24.7	38.7	38.7	33.9	34.1	25.7
	KW	4.44	4.44	4.42	4.57	4.64	4.57	4.58	4.51	4.66	4.71	4.70	4.71	4.60	4.75	4.78
125	T.C.	32.6	32.7	30.4	36.3	41.7	34.2	34.7	31.3	37.0	42.0	35.8	36.6	32.2	37.7	42.3
	S.C.	32.6	32.7	28.0	28.8	22.4	34.2	34.7	30.2	30.9	23.5	35.8	36.6	32.2	32.9	24.5
	KW	4.83	4.83	4.80	5.05	5.06	4.98	4.98	4.88	5.11	5.12	5.12	5.14	4.97	5.17	5.19

NOTE: ALL CAPACITIES INCLUDE INDOOR FAN HEAT. KW VALUES ARE FOR THE SYSTEM (OUTDOOR + INDOOR).

Multipliers for determining the performance with other indoor sections.

NOTE: For dry bulb temperatures different than those listed (between 73-87 °F), sensible capacity increases by 1060 BTUH per 1000 CFM per degree above the listed temperature and decreases by 1060 BTUH per 1000 CFM per degree below the listed temperature.

Air Handler	Coil	T.C.	S.C.	KW
–	FC/MC62	1.00	1.01	1.04
AHE60D	–	1.01	1.03	0.97
AHR60D	–	1.01	1.03	1.03
AHV60D	–	1.01	1.02	1.00
MV20D	FC/MC62D	1.01	1.03	0.98
MV20D	FC64D	1.05	1.07	0.98
MX20D	FC/MC62D	1.03	1.03	0.96
MX20D	FC64D	1.06	1.08	0.97

Furnace	Coil	T.C.	S.C.	KW
T*(8,L)V*C16	FC/MC62D	1.00	1.02	1.01
T*(8,L)V*C16	FC64D	1.05	1.06	1.02
T*(8,L)V*C20	FC/MC62D	1.01	1.02	1.00
T*(8,L)V*C20	FC64D	1.05	1.06	1.00
T*(8,L)X*C16	FC/MC62D	1.01	1.02	1.00
T*(8,L)X*C16	FC64D	1.05	1.06	1.00
T*(8,L)X*C20	FC/MC62D	1.04	1.06	0.99
T*(8,L)X*C20	FC64D	1.05	1.06	0.99
T*9(C,V)*C16	FC/MC62D	1.00	1.02	1.01
T*9(C,V)*C16	FC64D	1.05	1.06	1.02

Furnace	Coil	T.C.	S.C.	KW
T*9(C,V)*C20	FC/MC62D	1.01	1.05	1.02
T*9(C,V)*C20	FC64D	1.04	1.05	1.03
T*9(C,V)*D20	FC/MC62D	1.00	1.02	1.02
T*9(C,V)*D20	FC64D	1.04	1.06	1.02
T*9X*C16	FC/MC62D	1.01	1.02	1.00
T*9X*C16	FC64D	1.05	1.06	1.00
T*9X*C20	FC/MC62D	1.01	1.02	1.00
T*9X*C20	FC64D	1.05	1.06	0.99
T*9X*D20	FC/MC62D	1.00	1.02	1.00
T*9X*D20	FC64D	1.05	1.06	1.01
Y*(8,L)C*C16	FC/MC62D	1.00	1.02	1.01
Y*(8,L)C*C16	FC64D	1.05	1.06	1.02
Y*(8,L)C*C20	FC/MC62D	1.01	1.02	1.00
Y*(8,L)C*C20	FC64D	1.05	1.06	1.00
Y*9C*C16	FC/MC62D	1.00	1.02	1.01
Y*9C*C16	FC64D	1.05	1.06	1.02
Y*9C*C20	FC/MC62D	1.01	1.05	1.02
Y*9C*C20	FC64D	1.04	1.05	1.03
Y*9C*D20	FC/MC62D	1.00	1.02	1.02
Y*9C*D20	FC64D	1.04	1.06	1.02

COOLING PERFORMANCE DATA - HIGH CFM 2-STAGE OPERATION																
CONDENSING UNIT MODEL NO.		**THGF60S41S3**														
INDOOR COIL MODEL NO.		**AHX60**														
CONDENSING ENTERING AIR TEMPERATURE	**IDCFM**	1650					1850					2050				
	ID DB (°F)	80	80	75	80	80	80	80	75	80	80	80	80	75	80	80
	ID WB (°F)	57	62	62	67	72	57	62	62	67	72	57	62	62	67	72
65	T.C.	56.5	60.0	59.6	65.6	70.6	58.5	61.2	60.8	66.7	72.5	60.5	62.3	62.0	67.8	74.4
	S.C.	55.7	50.3	42.9	42.5	34.9	57.7	53.1	44.9	44.5	36.0	59.6	55.9	47.0	46.5	37.1
	KW	3.43	3.47	3.46	3.53	3.61	3.52	3.56	3.55	3.62	3.70	3.61	3.64	3.64	3.71	3.80
75	T.C.	54.4	57.2	56.8	62.6	67.6	56.3	58.2	57.9	63.6	69.1	58.1	59.2	59.0	64.6	70.6
	S.C.	53.6	49.1	41.6	41.3	33.5	55.4	51.9	43.7	43.2	34.6	57.3	54.7	45.7	45.2	35.7
	KW	3.81	3.85	3.85	3.92	4.00	3.91	3.94	3.93	4.01	4.09	4.00	4.02	4.02	4.09	4.19
85	T.C.	52.3	54.4	54.0	59.6	64.6	54.0	55.2	55.0	60.5	65.8	55.7	56.1	56.0	61.3	66.9
	S.C.	51.5	48.0	40.3	40.1	32.2	53.2	50.7	42.4	42.0	33.2	54.9	53.4	44.4	43.9	34.3
	KW	4.20	4.23	4.23	4.31	4.39	4.30	4.32	4.32	4.39	4.48	4.40	4.40	4.40	4.48	4.57
95	T.C.	50.2	51.6	51.2	56.5	61.7	51.8	52.3	52.1	57.3	62.4	53.3	52.9	53.0	58.1	63.2
	S.C.	49.5	46.8	39.1	38.9	30.8	51.0	49.5	41.1	40.8	31.8	52.5	52.1	43.1	42.6	32.9
	KW	4.59	4.62	4.62	4.70	4.78	4.69	4.70	4.70	4.78	4.87	4.79	4.78	4.79	4.87	4.96
105	T.C.	47.5	48.0	47.8	52.6	57.5	48.8	49.0	48.4	53.3	58.1	50.2	50.0	49.1	54.0	58.8
	S.C.	46.8	45.2	37.6	37.4	29.2	48.1	47.3	39.6	39.2	30.2	49.5	49.3	41.5	41.1	31.3
	KW	5.11	5.12	5.12	5.20	5.28	5.21	5.21	5.20	5.28	5.37	5.30	5.30	5.28	5.36	5.46
115	T.C.	44.7	44.4	44.4	48.7	53.3	45.9	45.7	44.8	49.3	53.9	47.1	47.1	45.2	49.8	54.4
	S.C.	44.1	43.7	36.1	35.8	27.6	45.2	45.0	38.0	37.7	28.6	46.4	46.4	39.9	39.5	29.7
	KW	5.63	5.62	5.62	5.70	5.79	5.72	5.72	5.70	5.78	5.88	5.82	5.82	5.78	5.86	5.96
125	T.C.	42.0	40.7	41.0	44.8	49.2	43.0	42.5	41.1	45.3	49.6	44.0	44.2	41.3	45.7	50.0
	S.C.	41.4	40.7	34.6	34.3	26.0	42.3	42.5	36.5	36.2	27.0	43.3	43.5	38.4	38.0	28.1
	KW	6.15	6.12	6.12	6.20	6.29	6.24	6.23	6.20	6.28	6.38	6.34	6.34	6.27	6.36	6.47
NOTE: ALL CAPACITIES INCLUDE INDOOR FAN HEAT. KW VALUES ARE FOR THE SYSTEM (OUTDOOR + INDOOR).																

Multipliers for determining the performance with other indoor sections.

NOTE: For dry bulb temperatures different than those listed (between 73-87 °F), sensible capacity increases by 1060 BTUH per 1000 CFM per degree above the listed temperature and decreases by 1060 BTUH per 1000 CFM per degree below the listed temperature.

HIGH CFM

Air Handler	Coil	T.C.	S.C.	KW
–	FC/MC62	0.99	0.99	1.01
AHE60D	–	1.00	1.00	0.98
AHV60D	–	0.99	0.96	0.97
MV20D	FC/MC62D	1.00	1.00	1.00
MV20D	FC64D	1.02	1.04	0.99
MX20D	FC/MC62D	1.00	1.00	0.96
MX20D	FC64D	1.02	1.03	0.97

Furnace	Coil	T.C.	S.C.	KW
T*(8,L)V*C20	FC/MC62D	0.99	0.94	0.99
T*(8,L)V*C20	FC64D	1.00	0.98	0.97
T*(8,L)X*C20	FC/MC62D	1.02	1.04	1.01
T*(8,L)X*C20	FC64D	0.99	0.96	0.97
T*9(C,V)*C20	FC/MC62D	0.99	0.97	0.96
T*9(C,V)*C20	FC64D	1.00	0.99	0.97
T*9(C,V)*D20	FC/MC62D	1.01	0.99	0.97
T*9(C,V)*D20	FC64D	0.99	0.94	0.99
T*9X*C20	FC/MC62D	0.98	0.96	0.99
T*9X*C20	FC64D	1.02	1.04	1.01
T*9X*D20	FC/MC62D	1.00	0.98	1.00
T*9X*D20	FC64D	0.98	0.96	0.99
Y*(8,L)C*C20	FC/MC62D	0.98	0.96	0.98
Y*(8,L)C*C20	FC64D	1.00	0.98	1.00
Y*9C*C20	FC/MC62D	1.00	0.98	0.99
Y*9C*C20	FC64D	0.98	0.96	0.98
Y*9C*D20	FC/MC62D	0.99	0.96	0.96
Y*9C*D20	FC64D	1.00	0.98	0.99

HEATING PERFORMANCE DATA										
CONDENSING UNIT MODEL NO		**THGF18S41S3**								
EVAPORATOR COIL MODEL NO		**AHX30**								
AIR TEMP. ENTERING OUTDOOR UNIT	**AIR TEMP. ENTERING INDOOR COIL**	ID CFM								
		450			600			750		
		MBH	COP	KW	MBH	COP	KW	MBH	COP	KW
60	60	20.9	4.6	1.34	22.0	5.0	1.30	23.0	5.4	1.25
	70	20.3	4.0	1.48	21.3	4.3	1.44	22.3	4.7	1.39
	80	19.7	3.5	1.63	20.7	3.8	1.58	21.6	4.2	1.52
47	60	18.4	4.2	1.29	18.9	4.4	1.27	19.5	4.6	1.24
	70	17.5	3.6	1.43	18.1	3.9	1.37	18.8	4.2	1.31
	80	16.6	3.1	1.57	17.3	3.3	1.54	18.0	3.5	1.50
40	60	16.4	3.8	1.27	17.0	4.0	1.25	17.5	4.2	1.23
	70	15.9	3.3	1.40	16.5	3.5	1.38	17.1	3.7	1.36
	80	15.4	3.0	1.53	16.0	3.1	1.51	16.6	3.3	1.48
30	60	14.4	3.4	1.23	14.8	3.5	1.23	15.2	3.6	1.22
	70	13.9	3.0	1.36	14.3	3.1	1.35	14.6	3.2	1.34
	80	13.5	2.7	1.49	13.8	2.7	1.48	14.1	2.8	1.47
17	60	11.4	2.8	1.18	11.7	2.9	1.19	11.9	2.9	1.20
	70	10.6	2.4	1.29	10.9	2.5	1.27	11.2	2.6	1.24
	80	10.2	2.1	1.42	10.5	2.2	1.39	10.8	2.3	1.35
10	60	9.5	2.5	1.13	9.6	2.5	1.12	9.7	2.6	1.11
	70	9.1	2.1	1.26	9.3	2.2	1.24	9.5	2.3	1.22
	80	8.6	1.8	1.39	8.9	1.9	1.37	9.3	2.0	1.34
NOTE: ALL CAPACITIES ARE NET, WITH INDOOR FAN HEAT ALREADY DEDUCTED. KW VALUES ARE FOR THE SYSTEM (OUTDOOR + INDOOR).										

Multipliers for determining the performance with other indoor sections.

Air Handler	Coil	MBH	COP	KW
–	FC/MC/PC32	1.02	0.91	1.11
–	FC/MC/PC35	1.02	0.91	1.11
–	FC/MC/PC37	1.02	0.93	1.09
–	FC/MC/PC43	1.02	0.93	1.09
AHE24B	–	0.99	0.97	1.02
AHE30B	–	1.00	0.97	1.02
AHR24B	–	1.02	0.91	1.11
AHV24B	–	0.99	0.96	1.02
AHV30B	–	1.01	1.01	1.00
AHV36C	–	1.01	1.03	0.98
AV*36	–	1.00	1.03	0.97
MV12B	FC/MC35B	1.00	0.97	1.02
MV12B	FC/MC43B	1.01	0.99	1.01
MX12B	FC/MC35B	0.99	1.01	0.98
MX12B	FC/MC43B	1.00	1.01	0.98

Furnace	Coil	MBH	COP	KW
T*(8,L)V*A12	FC/MC/PC32A	1.00	0.97	1.02
T*(8,L)V*A12	FC/MC/PC37A	1.01	1.01	0.99
T*(8,L)V*B12	FC/MC/PC35B	1.00	0.97	1.02
T*(8,L)V*B12	FC/MC/PC43B	1.00	0.97	1.02
T*(8,L)V*C16	FC/MC/PC35C	1.00	0.98	1.01
T*(8,L)X*A12	FC/MC/PC32A	0.99	0.99	1.00
T*(8,L)X*A12	FC/MC/PC37A	1.00	1.04	0.96
T*(8,L)X*B12	FC/MC/PC35B	0.99	1.00	0.99
T*(8,L)X*B12	FC/MC/PC43B	1.00	1.04	0.95
T*(8,L)X*C16	FC/MC/PC35C	0.99	0.98	1.01
T*9(C,V)*A10	FC/MC/PC32A	1.01	0.96	1.04
T*9(C,V)*A10	FC/MC/PC37A	1.01	0.96	1.04
T*9(C,V)*B12	FC/MC/PC35B	0.99	0.95	1.03
T*9(C,V)*C16	FC/MC/PC35C	1.00	0.99	1.00
T*9X*A10	FC/MC/PC32A	1.00	0.96	1.03
T*9X*A10	FC/MC/PC37A	1.01	0.98	1.01
T*9X*B12	FC/MC/PC35B	0.99	1.00	0.99
Y*(8,L)C*A12	FC/MC/PC32A	1.00	0.97	1.02
Y*(8,L)C*A12	FC/MC/PC37A	1.01	1.01	0.99
Y*(8,L)C*B12	FC/MC/PC35B	1.00	0.97	1.02
Y*(8,L)C*B12	FC/MC/PC43B	1.00	0.97	1.02
Y*(8,L)C*C16	FC/MC/PC35C	1.00	0.98	1.01
Y*9C*B12	FC/MC/PC35B	0.99	0.95	1.03
Y*9C*C16	FC/MC/PC35C	1.00	0.99	1.00

HEATING PERFORMANCE DATA										
CONDENSING UNIT MODEL NO		THGF24S41S3								
EVAPORATOR COIL MODEL NO		AHX30								
AIR TEMP. ENTERING OUTDOOR UNIT	AIR TEMP. ENTERING INDOOR COIL	ID CFM								
		600			800			1000		
		MBH	COP	KW	MBH	COP	KW	MBH	COP	KW
60	60	25.7	4.3	1.74	26.5	4.5	1.72	27.2	4.7	1.70
	70	24.0	3.7	1.91	25.1	3.9	1.89	26.1	4.1	1.87
	80	22.3	3.1	2.08	23.6	3.4	2.06	25.0	3.6	2.04
47	60	23.7	4.1	1.68	23.9	4.2	1.67	24.2	4.3	1.66
	70	21.7	3.5	1.84	22.2	3.7	1.78	22.7	3.9	1.72
	80	19.8	2.9	2.00	20.5	3.0	1.99	21.2	3.1	1.98
40	60	19.8	3.6	1.61	20.6	3.7	1.62	21.3	3.8	1.63
	70	18.6	3.1	1.78	19.4	3.2	1.79	20.2	3.3	1.79
	80	17.3	2.6	1.95	18.2	2.7	1.95	19.1	2.9	1.95
30	60	17.7	3.3	1.57	17.9	3.3	1.59	18.0	3.3	1.62
	70	16.6	2.8	1.72	16.9	2.8	1.74	17.2	2.9	1.77
	80	15.4	2.4	1.88	15.9	2.5	1.90	16.4	2.5	1.92
17	60	14.6	2.9	1.50	15.0	2.9	1.54	15.3	2.8	1.58
	70	13.0	2.3	1.66	13.7	2.4	1.66	14.4	2.5	1.66
	80	10.6	1.7	1.80	11.6	1.9	1.80	12.6	2.1	1.80
10	60	13.5	2.7	1.48	13.7	2.7	1.49	13.9	2.7	1.50
	70	12.1	2.2	1.64	12.4	2.2	1.64	12.7	2.3	1.64
	80	10.7	1.8	1.78	11.1	1.8	1.79	11.4	1.9	1.79
NOTE: ALL CAPACITIES ARE NET, WITH INDOOR FAN HEAT ALREADY DEDUCTED. KW VALUES ARE FOR THE SYSTEM (OUTDOOR + INDOOR).										

Multipliers for determining the performance with other indoor sections.

Air Handler	Coil	MBH	COP	KW
–	FC/MC/PC32	1.03	0.92	1.10
–	FC/MC/PC35	1.03	0.91	1.11
–	FC/MC/PC37	1.03	0.94	1.08
–	FC/MC/PC43	1.03	0.94	1.08
AHE24B	–	1.00	0.97	1.02
AHE30B	–	1.00	0.97	1.02
AHR24B	–	1.01	0.92	1.08
AHV24B	–	1.00	0.95	1.04
AHV30B	–	1.00	0.96	1.03
AHV36C	–	1.00	0.99	0.99
AV*36	–	0.99	0.99	0.98
MV12B	FC/MC35B	1.00	0.98	1.00
MV12B	FC/MC43B	1.00	1.01	0.98
MX12B	FC/MC35B	0.99	1.00	0.98
MX12B	FC/MC43B	1.00	0.99	1.00

Furnace	Coil	MBH	COP	KW
T*(8,L)V*A12	FC/MC/PC32A	1.00	0.96	1.03
T*(8,L)V*A12	FC/MC/PC37A	1.00	1.00	0.99
T*(8,L)V*B12	FC/MC/PC35B	1.00	0.98	1.01
T*(8,L)V*B12	FC/MC/PC43B	1.00	1.01	0.98
T*(8,L)V*C16	FC/MC/PC35C	1.00	0.99	1.00
T*(8,L)V*C16	FC/MC/PC43C	1.00	1.01	0.98
T*(8,L)V*C20	FC/MC/PC35C	0.99	0.96	1.02
T*(8,L)V*C20	FC/MC/PC43C	0.99	0.98	0.99
T*(8,L)X*A12	FC/MC/PC32A	1.00	0.99	0.99
T*(8,L)X*A12	FC/MC/PC37A	1.00	1.03	0.96
T*(8,L)X*B12	FC/MC/PC35B	0.99	1.00	0.98
T*(8,L)X*B12	FC/MC/PC43B	1.00	1.03	0.96
T*(8,L)X*C16	FC/MC/PC35C	0.99	1.01	0.97
T*(8,L)X*C16	FC/MC/PC43C	1.00	1.03	0.96

Furnace	Coil	MBH	COP	KW
T*(8,L)X*C20	FC/MC/PC35C	1.00	0.99	0.99
T*(8,L)X*C20	FC/MC/PC43C	1.00	1.01	0.98
T*9V*A10	FC/MC/PC32A	1.01	0.95	1.05
T*9V*A10	FC/MC/PC37A	1.02	0.97	1.04
T*9(C,V)*B12	FC/MC/PC35B	1.00	0.97	1.02
T*9(C,V)*B12	FC/MC/PC43B	1.01	0.99	1.00
T*9(C,V)*C16	FC/MC/PC35C	1.01	0.99	1.01
T*9(C,V)*C16	FC/MC/PC43C	1.00	1.01	0.98
T*9(C,V)*C20	FC/MC/PC35C	0.99	0.96	1.02
T*9(C,V)*C20	FC/MC/PC43C	1.01	1.02	0.98
T*9X*A10	FC/MC/PC32A	1.00	0.94	1.05
T*9X*A10	FC/MC/PC37A	1.01	0.96	1.04
T*9X*B12	FC/MC/PC35B	1.00	0.99	0.99
T*9X*B12	FC/MC/PC43B	1.00	1.02	0.97
T*9X*C16	FC/MC/PC35C	1.00	0.99	0.99
T*9X*C16	FC/MC/PC43C	1.00	1.02	0.97
T*9X*C20	FC/MC/PC35C	1.00	0.99	1.00
T*9X*C20	FC/MC/PC43C	1.00	1.01	0.98
Y*(8,L)C*A12	FC/MC/PC32A	1.00	0.96	1.03
Y*(8,L)C*A12	FC/MC/PC37A	1.00	1.00	0.99
Y*(8,L)C*B12	FC/MC/PC35B	1.00	0.98	1.01
Y*(8,L)C*B12	FC/MC/PC43B	1.00	1.01	0.98
Y*(8,L)C*C16	FC/MC/PC35C	1.00	0.99	1.00
Y*(8,L)C*C16	FC/MC/PC43C	1.00	1.01	0.98
Y*(8,L)C*C20	FC/MC/PC35C	0.99	0.96	1.02
Y*(8,L)C*C20	FC/MC/PC43C	0.99	0.98	0.99
Y*9C*B12	FC/MC/PC35B	1.00	0.97	1.02
Y*9C*B12	FC/MC/PC43B	1.01	0.99	1.00
Y*9C*C16	FC/MC/PC35C	1.01	0.99	1.01
Y*9C*C16	FC/MC/PC43C	1.00	1.01	0.98
Y*9C*C20	FC/MC/PC35C	0.99	0.96	1.02
Y*9C*C20	FC/MC/PC43C	1.01	1.02	0.98

HEATING PERFORMANCE DATA										
CONDENSING UNIT MODEL NO		**THGF30S41S3**								
EVAPORATOR COIL MODEL NO		**AHX36**								
AIR TEMP. ENTERING OUTDOOR UNIT	**AIR TEMP. ENTERING INDOOR COIL**	ID CFM								
		800			1000			1200		
		MBH	COP	KW	MBH	COP	KW	MBH	COP	KW
60	60	36.1	4.9	2.14	36.5	5.2	2.06	36.9	5.5	1.98
	70	35.0	4.3	2.40	35.5	4.5	2.30	36.0	4.8	2.20
	80	34.0	3.7	2.67	34.6	4.0	2.54	35.1	4.3	2.41
47	60	30.5	4.4	2.03	30.9	4.6	1.97	31.3	4.8	1.91
	70	29.7	3.8	2.30	30.1	4.0	2.20	30.5	4.2	2.10
	80	29.0	3.3	2.56	29.3	3.5	2.46	29.7	3.7	2.35
40	60	27.7	4.0	2.02	28.0	4.2	1.96	28.3	4.4	1.90
	70	26.9	3.5	2.25	27.2	3.7	2.18	27.6	3.8	2.11
	80	26.1	3.1	2.48	26.5	3.2	2.40	26.9	3.4	2.32
30	60	24.0	3.6	1.96	24.2	3.7	1.92	24.4	3.8	1.87
	70	23.1	3.1	2.19	23.4	3.2	2.14	23.6	3.3	2.09
	80	22.3	2.7	2.42	22.6	2.8	2.36	22.9	2.9	2.30
17	60	19.1	3.0	1.89	19.3	3.0	1.87	19.5	3.1	1.85
	70	18.4	2.6	2.03	18.7	2.8	1.99	18.9	2.9	1.94
	80	17.3	2.3	2.25	17.7	2.4	2.20	18.1	2.5	2.14
10	60	16.7	2.7	1.80	16.8	2.8	1.77	16.9	2.9	1.74
	70	15.3	2.3	1.99	15.7	2.3	1.96	16.0	2.4	1.93
	80	13.9	1.9	2.19	14.5	2.0	2.15	15.1	2.1	2.10
NOTE: ALL CAPACITIES ARE NET, WITH INDOOR FAN HEAT ALREADY DEDUCTED. KW VALUES ARE FOR THE SYSTEM (OUTDOOR + INDOOR).										

Multipliers for determining the performance with other indoor sections.

Air Handler	Coil	MBH	COP	KW
–	FC/MC/PC37	1.02	0.93	1.10
–	FC/MC/PC43	1.02	0.93	1.10
AHE36C	–	1.00	1.00	1.00
AHR36B	–	1.03	0.94	1.10
AHV36C	–	1.04	0.94	1.11
AV*36	–	1.00	1.01	0.99
MV12B	FC/MC43B	1.00	0.98	1.03
MV16C	FC/MC43C	1.00	0.99	1.02
MX12B	FC/MC43B	1.01	1.00	1.01
MX16C	FC/MC43C	1.00	1.01	0.99

Furnace	Coil	MBH	COP	KW
T*(8,L)V*A12	FC/MC/PC37A	1.00	0.96	1.05
T*(8,L)V*B12	FC/MC/PC43B	1.01	0.97	1.05
T*(8,L)V*C16	FC/MC/PC43C	1.00	0.99	1.02
T*(8,L)V*C20	FC/MC/PC43C	1.00	1.00	1.00
T*(8,L)X*A12	FC/MC/PC37A	1.01	1.01	1.01
T*(8,L)X*B12	FC/MC/PC43B	1.01	1.00	1.01
T*(8,L)X*C16	FC/MC/PC43C	1.00	1.00	1.00
T*9(C,V)*B12	FC/MC/PC43B	1.01	0.96	1.05
T*9(C,V)*C16	FC/MC/PC43C	1.00	0.97	1.04
T*9(C,V)*C20	FC/MC/PC43C	1.00	0.99	1.02
T*9X*B12	FC/MC/PC43B	1.01	1.00	1.02
T*9X*C16	FC/MC/PC43C	1.00	0.99	1.02
Y*(8,L)C*A12	FC/MC/PC37A	1.00	0.96	1.05
Y*(8,L)C*B12	FC/MC/PC43B	1.01	0.97	1.05
Y*(8,L)C*C16	FC/MC/PC43C	1.00	0.99	1.02
Y*(8,L)C*C20	FC/MC/PC43C	1.00	1.00	1.00
Y*9C*B12	FC/MC/PC43B	1.01	0.96	1.05
Y*9C*C16	FC/MC/PC43C	1.00	0.97	1.04
Y*9C*C20	FC/MC/PC43C	1.00	0.99	1.02

HEATING PERFORMANCE DATA										
CONDENSING UNIT MODEL NO		**THGF36S41S4**								
EVAPORATOR COIL MODEL NO		**FC/MC/PC48**								
AIR TEMP. ENTERING OUTDOOR UNIT	**AIR TEMP. ENTERING INDOOR COIL**	ID CFM								
		1000			1200			1400		
		MBH	COP	KW	MBH	COP	KW	MBH	COP	KW
60	60	43.1	4.23	2.99	44.0	4.34	2.97	44.9	4.46	2.95
	70	42.3	3.94	3.14	43.1	4.04	3.13	44.0	4.13	3.12
	80	38.9	3.45	3.30	39.8	3.53	3.30	40.7	3.62	3.29
47	60	35.6	3.78	2.76	36.4	3.86	2.76	37.2	3.93	2.77
	70	34.6	3.49	2.90	35.3	3.57	2.90	36.0	3.63	2.91
	80	31.8	3.07	3.03	32.4	3.12	3.04	33.0	3.16	3.06
40	60	31.3	3.44	2.66	31.9	3.50	2.67	32.5	3.56	2.68
	70	30.4	3.20	2.79	31.0	3.24	2.80	31.6	3.28	2.82
	80	28.6	2.87	2.92	29.1	2.90	2.94	29.5	2.92	2.96
30	60	27.0	3.12	2.54	27.4	3.14	2.56	27.8	3.17	2.57
	70	26.0	2.88	2.64	26.3	2.89	2.67	26.7	2.90	2.70
	80	24.2	2.58	2.74	24.5	2.58	2.78	24.8	2.58	2.82
17	60	21.6	2.69	2.35	21.7	2.65	2.40	21.8	2.61	2.45
	70	20.1	2.41	2.45	20.2	2.41	2.45	20.3	2.41	2.45
	80	18.2	2.19	2.44	18.3	2.14	2.50	18.3	2.10	2.56
10	60	18.2	2.41	2.21	18.4	2.38	2.26	18.6	2.35	2.32
	70	16.7	2.19	2.23	16.8	2.14	2.30	17.0	2.11	2.36
	80	15.0	1.95	2.26	15.1	1.90	2.33	15.2	1.85	2.40
NOTE: ALL CAPACITIES ARE NET, WITH INDOOR FAN HEAT ALREADY DEDUCTED. KW VALUES ARE FOR THE SYSTEM (OUTDOOR + INDOOR).										

Multipliers for determining the performance with other indoor sections.

Air Handler	Coil	MBH	COP	KW
–	FC/MC/PC37	1.01	1.01	1.00
–	FC/MC/PC43	1.01	1.01	1.00
–	FC/MC/PC48	1.00	1.00	1.00
–	FC/MC/PC60	1.02	1.04	0.98
–	UC48	1.02	1.04	0.98
–	UC60	1.02	1.03	0.99
AHE36C	–	0.99	1.09	0.91
AHE42D	–	0.98	1.07	0.92
AHE48D	–	0.97	1.07	0.91
AHR36B	–	1.01	1.01	1.00
AHR42C	–	1.00	1.02	0.98
AHV36C	–	1.02	1.02	1.00
AHV42D	–	1.02	1.03	0.99
AHV48D	–	1.02	1.03	0.99

Air Handler	Coil	MBH	COP	KW
AV*36	–	0.99	1.07	0.93
AV*48	–	1.00	1.12	0.89
MV12B	FC/MC43B	0.99	1.05	0.94
MV12D	FC/MC48D	0.97	1.08	0.90
MV12D	FC/MC60D	0.99	1.09	0.91
MV16C	FC/MC43C	0.99	1.07	0.93
MV16C	FC/MC48C	0.98	1.07	0.92
MV16C	FC60C	1.00	1.11	0.90
MX12B	FC/MC43B	1.00	1.05	0.95
MX12D	FC/MC48D	0.98	1.07	0.92
MX12D	FC/MC60D	1.01	1.12	0.90
MX16C	FC/MC43C	0.97	1.07	0.91
MX16C	FC/MC48C	0.97	1.08	0.90
MX16C	FC60C	0.99	1.12	0.89

Continued on next page.

Furnace	Coil	MBH	COP	KW
T*(8,L)V*B12	FC/MC/PC43B	1.00	1.02	0.98
T*(8,L)V*C16	FC/MC/PC43C	0.99	1.05	0.94
T*(8,L)V*C16	FC/MC/PC48C	0.98	1.06	0.92
T*(8,L)V*C16	FC/PC60C	1.00	1.11	0.90
T*(8,L)V*C16	UC48C	1.00	1.09	0.92
T*(8,L)V*C16	UC60C	1.00	1.09	0.91
T*(8,L)V*C20	FC/MC/PC43C	0.99	1.06	0.94
T*(8,L)V*C20	FC/MC/PC48C	0.98	1.07	0.92
T*(8,L)V*C20	FC/PC60C	1.00	1.10	0.91
T*(8,L)V*C20	UC48C	1.00	1.10	0.91
T*(8,L)V*C20	UC60C	1.00	1.09	0.92
T*(8,L)X*A12	FC/MC/PC37A	1.00	1.06	0.94
T*(8,L)X*B12	FC/MC/PC43B	1.00	1.06	0.94
T*(8,L)X*C16	FC/MC/PC43C	0.99	1.09	0.91
T*(8,L)X*C16	FC/MC/PC48C	0.97	1.08	0.90
T*(8,L)X*C16	FC/PC60C	1.00	1.12	0.89
T*(8,L)X*C16	UC48C	1.00	1.12	0.89
T*(8,L)X*C16	UC60C	0.99	1.11	0.89
T*(8,L)X*C20	FC/MC/PC43C	0.99	1.07	0.93
T*(8,L)X*C20	FC/MC/PC48C	1.00	1.09	0.92
T*(8,L)X*C20	FC/PC60C	1.01	1.13	0.89
T*(8,L)X*C20	UC48C	1.01	1.12	0.90
T*(8,L)X*C20	UC60C	1.00	1.11	0.90
T*9(C,V)*B12	FC/MC/PC43B	1.00	1.03	0.98
T*9(C,V)*C16	FC/MC/PC43C	1.00	1.04	0.96
T*9(C,V)*C16	FC/MC/PC48C	0.99	1.05	0.94
T*9(C,V)*C16	FC/PC60C	1.01	1.08	0.94
T*9(C,V)*C16	UC48C	1.01	1.08	0.93
T*9(C,V)*C16	UC60C	1.01	1.07	0.95
T*9(C,V)*C20	FC/MC/PC43C	1.00	1.05	0.95
T*9(C,V)*C20	FC/MC/PC48C	1.01	1.05	0.96
T*9(C,V)*C20	FC/PC60C	1.03	1.10	0.93
T*9(C,V)*C20	UC48C	1.03	1.09	0.95
T*9(C,V)*C20	UC60C	1.02	1.08	0.94
T*9(C,V)*D20	FC/MC/PC48D	0.99	1.05	0.94
T*9(C,V)*D20	FC/MC/PC60D	1.00	1.09	0.92
T*9(C,V)*D20	UC48D	1.00	1.09	0.92
T*9(C,V)*D20	UC60D	1.00	1.08	0.93
T*9X*B12	FC/MC/PC43B	0.99	1.05	0.95
T*9X*C16	FC/MC/PC43C	0.99	1.05	0.94

Furnace	Coil	MBH	COP	KW
T*9X*C16	FC/MC/PC48C	0.99	1.07	0.93
T*9X*C16	FC/PC60C	1.01	1.12	0.91
T*9X*C16	UC48C	1.01	1.10	0.92
T*9X*C16	UC60C	1.01	1.10	0.92
T*9X*C20	FC/MC/PC43C	0.99	1.07	0.93
T*9X*C20	FC/MC/PC48C	0.98	1.06	0.92
T*9X*C20	FC/PC60C	1.00	1.10	0.91
T*9X*C20	UC48C	1.00	1.10	0.91
T*9X*C20	UC60C	1.00	1.09	0.91
T*9X*D20	FC/MC/PC48D	0.98	1.07	0.92
T*9X*D20	FC/MC/PC60D	1.01	1.14	0.89
T*9X*D20	UC48D	1.00	1.10	0.91
T*9X*D20	UC60D	1.01	1.12	0.90
Y*(8,L)C*A12	FC/MC/PC37A	1.00	1.03	0.98
Y*(8,L)C*B12	FC/MC/PC43B	1.00	1.02	0.98
Y*(8,L)C*C16	FC/MC/PC43C	0.99	1.05	0.94
Y*(8,L)C*C16	FC/MC/PC48C	0.98	1.06	0.92
Y*(8,L)C*C16	FC/PC60C	1.00	1.11	0.90
Y*(8,L)C*C16	UC48C	1.00	1.09	0.92
Y*(8,L)C*C16	UC60C	1.00	1.09	0.91
Y*(8,L)C*C20	FC/MC/PC43C	0.99	1.06	0.94
Y*(8,L)C*C20	FC/MC/PC48C	0.98	1.07	0.92
Y*(8,L)C*C20	FC/PC60C	1.00	1.10	0.91
Y*(8,L)C*C20	UC48C	1.00	1.10	0.91
Y*(8,L)C*C20	UC60C	1.00	1.09	0.92
Y*9C*B12	FC/MC/PC43B	1.00	1.03	0.98
Y*9C*C16	FC/MC/PC43C	1.00	1.04	0.96
Y*9C*C16	FC/MC/PC48C	0.99	1.05	0.94
Y*9C*C16	FC/PC60C	1.01	1.08	0.94
Y*9C*C16	UC48C	1.01	1.08	0.93
Y*9C*C16	UC60C	1.01	1.07	0.95
Y*9C*C20	FC/MC/PC43C	1.00	1.05	0.95
Y*9C*C20	FC/MC/PC48C	1.01	1.05	0.96
Y*9C*C20	FC/PC60C	1.03	1.10	0.93
Y*9C*C20	UC48C	1.03	1.09	0.95
Y*9C*C20	UC60C	1.02	1.08	0.94
Y*9C*D20	FC/MC/PC48D	0.99	1.05	0.94
Y*9C*D20	FC/MC/PC60D	1.00	1.09	0.92
Y*9C*D20	UC48D	1.00	1.09	0.92
Y*9C*D20	UC60D	1.00	1.08	0.93

HEATING PERFORMANCE DATA										
CONDENSING UNIT MODEL NO		THGF42S41S3								
EVAPORATOR COIL MODEL NO		AHX60								
AIR TEMP. ENTERING OUTDOOR UNIT	AIR TEMP. ENTERING INDOOR COIL	ID CFM								
		1200			1400			1600		
		MBH	COP	KW	MBH	COP	KW	MBH	COP	KW
60	60	42.9	4.5	2.82	42.7	4.4	2.87	42.4	4.3	2.92
	70	42.7	4.1	3.07	42.6	4.0	3.11	42.4	3.9	3.15
	80	42.5	3.8	3.31	42.5	3.7	3.35	42.4	3.7	3.38
47	60	39.0	4.4	2.61	39.0	4.3	2.67	39.0	4.2	2.73
	70	38.4	3.9	2.88	38.5	3.9	2.88	38.6	3.9	2.88
	80	37.8	3.5	3.16	38.0	3.5	3.21	38.3	3.4	3.27
40	60	36.1	4.1	2.55	36.3	4.1	2.62	36.5	4.0	2.68
	70	35.3	3.7	2.82	35.7	3.6	2.89	36.1	3.6	2.96
	80	34.5	3.3	3.09	35.1	3.3	3.16	35.7	3.2	3.23
30	60	31.3	3.7	2.49	31.5	3.6	2.57	31.6	3.5	2.64
	70	30.7	3.3	2.76	30.9	3.2	2.83	31.0	3.1	2.90
	80	30.1	2.9	3.04	30.3	2.9	3.10	30.5	2.8	3.16
17	60	24.9	3.2	2.30	25.2	3.0	2.45	25.5	2.9	2.59
	70	24.7	2.6	2.74	25.5	2.7	2.82	26.4	2.7	2.90
	80	23.1	2.2	3.05	24.5	2.3	3.11	25.9	2.4	3.16
10	60	22.3	2.6	2.51	22.9	2.6	2.55	23.4	2.6	2.60
	70	22.3	2.3	2.79	22.7	2.4	2.82	23.2	2.4	2.85
	80	22.4	2.2	3.04	22.6	2.2	3.07	22.9	2.2	3.11
NOTE: ALL CAPACITIES ARE NET, WITH INDOOR FAN HEAT ALREADY DEDUCTED. KW VALUES ARE FOR THE SYSTEM (OUTDOOR + INDOOR).										

Multipliers for determining the performance with other indoor sections.

Air Handler	Coil	MBH	COP	KW
–	FC/MC/PC48	1.01	0.93	1.09
–	FC/MC/PC60	1.03	0.97	1.06
–	FC/MC62	1.01	0.95	1.07
AHE42D	–	0.99	0.98	1.01
AHE48D	–	0.99	0.98	1.01
AHE60D	–	0.99	1.01	0.99
AHR42C	–	1.06	0.99	1.08
AHR48D	–	1.05	0.95	1.11
AHR60D	–	1.06	0.99	1.08
AHV48D	–	0.97	0.94	1.03
AHV60D	–	1.00	0.98	1.02
MV16C	FC/MC48C	1.00	0.97	1.03
MV16C	FC60C	1.00	1.01	0.99
MV20D	FC/MC48D	1.00	0.99	1.01
MV20D	FC/MC60D	1.00	1.02	0.98
MV20D	FC/MC62D	1.00	1.00	1.00
MX16C	FC/MC48C	0.99	0.99	1.00
MX16C	FC60C	1.00	1.03	0.98
MX20D	FC/MC48D	0.99	0.99	1.00
MX20D	FC/MC60D	1.00	1.05	0.96
MX20D	FC/MC62D	1.00	1.03	0.98

Furnace	Coil	MBH	COP	KW
T*(8,L)V*C16	FC/MC/PC48C	1.00	0.95	1.06
T*(8,L)V*C16	FC/MC62D	1.00	0.97	1.03
T*(8,L)V*C16	FC/PC60C	1.01	1.00	1.02
T*(8,L)V*C20	FC/MC/PC48C	1.00	0.96	1.04
T*(8,L)V*C20	FC/MC62D	1.00	0.99	1.01
T*(8,L)V*C20	FC/PC60C	1.00	1.02	0.99
T*(8,L)X*C16	FC/MC/PC48C	0.99	0.99	1.00
T*(8,L)X*C16	FC/MC62D	1.00	1.01	1.00
T*(8,L)X*C16	FC/PC60C	1.00	1.03	0.97
T*(8,L)X*C20	FC/MC/PC48C	1.00	0.99	1.01
T*(8,L)X*C20	FC/MC62D	1.00	1.02	0.99

Furnace	Coil	MBH	COP	KW
T*(8,L)X*C20	FC/PC60C	1.00	1.04	0.96
T*9(C,V)*C16	FC/MC/PC48C	1.00	0.95	1.05
T*9(C,V)*C16	FC/MC62D	1.01	0.96	1.06
T*9(C,V)*C16	FC/PC60C	1.01	0.98	1.04
T*9(C,V)*C20	FC/MC/PC48C	1.00	0.95	1.05
T*9(C,V)*C20	FC/MC62D	1.01	0.97	1.05
T*9(C,V)*C20	FC/PC60C	1.01	0.99	1.03
T*9(C,V)*D20	FC/MC/PC48D	1.00	0.96	1.05
T*9(C,V)*D20	FC/MC/PC60D	1.01	1.00	1.02
T*9(C,V)*D20	FC/MC62D	1.00	0.97	1.03
T*9X*C16	FC/MC/PC48C	1.00	0.97	1.04
T*9X*C16	FC/MC62D	1.00	0.98	1.02
T*9X*C16	FC/PC60C	1.01	1.01	1.01
T*9X*C20	FC/MC/PC48C	1.00	0.98	1.03
T*9X*C20	FC/MC62D	1.00	0.99	1.01
T*9X*C20	FC/PC60C	1.00	1.02	0.98
T*9X*D20	FC/MC/PC48D	1.00	0.98	1.02
T*9X*D20	FC/MC/PC60D	1.00	1.05	0.96
T*9X*D20	FC/MC62D	1.00	1.00	1.00
Y*(8,L)C*C16	FC/MC/PC48C	1.00	0.95	1.06
Y*(8,L)C*C16	FC/MC62D	1.00	0.97	1.03
Y*(8,L)C*C16	FC/PC60C	1.01	1.00	1.02
Y*(8,L)C*C20	FC/MC/PC48C	1.00	0.96	1.04
Y*(8,L)C*C20	FC/MC62D	1.00	0.99	1.01
Y*(8,L)C*C20	FC/PC60C	1.00	1.02	0.99
Y*9C*C16	FC/MC/PC48C	1.00	0.95	1.05
Y*9C*C16	FC/MC62D	1.01	0.96	1.06
Y*9C*C16	FC/PC60C	1.01	0.98	1.04
Y*9C*C20	FC/MC/PC48C	1.00	0.95	1.05
Y*9C*C20	FC/MC62D	1.01	0.97	1.05
Y*9C*C20	FC/PC60C	1.01	0.99	1.03
Y*9C*D20	FC/MC/PC48D	1.00	0.96	1.05
Y*9C*D20	FC/MC/PC60D	1.01	1.00	1.02
Y*9C*D20	FC/MC62D	1.00	0.97	1.03

HEATING PERFORMANCE DATA										
CONDENSING UNIT MODEL NO		THGF48S41S3								
EVAPORATOR COIL MODEL NO		F6FP060								
AIR TEMP. ENTERING OUTDOOR UNIT	AIR TEMP. ENTERING INDOOR COIL	ID CFM								
		1400			1600			1800		
		MBH	COP	KW	MBH	COP	KW	MBH	COP	KW
60	60	60.5	5.2	3.41	61.2	4.9	3.64	61.9	4.7	3.88
	70	59.2	4.5	3.87	59.8	4.3	4.08	60.4	4.1	4.29
	80	57.9	3.9	4.33	58.4	3.8	4.51	58.9	3.7	4.69
47	60	51.6	4.3	3.48	51.8	4.1	3.70	52.0	3.9	3.92
	70	50.5	3.8	3.92	50.7	3.8	3.88	51.0	3.9	3.85
	80	49.4	3.3	4.34	49.7	3.1	4.68	50.0	2.9	5.02
40	60	46.4	3.9	3.50	46.6	3.7	3.73	46.8	3.5	3.96
	70	45.7	3.4	4.00	45.8	3.2	4.23	45.8	3.0	4.47
	80	45.0	2.9	4.50	44.9	2.8	4.74	44.9	2.6	4.98
30	60	38.7	3.4	3.31	39.0	3.2	3.59	39.4	3.0	3.88
	70	37.6	3.2	3.48	38.1	2.9	3.87	38.6	2.7	4.25
	80	36.4	2.9	3.65	37.2	2.6	4.14	37.9	2.4	4.62
17	60	28.9	3.2	2.66	30.2	3.0	2.93	31.6	2.9	3.20
	70	31.2	2.6	3.52	32.2	2.6	3.59	33.2	2.7	3.66
	80	29.6	2.3	3.71	30.2	2.3	3.80	30.8	2.3	3.89
10	60	27.3	2.6	3.05	27.0	2.5	3.14	26.7	2.4	3.23
	70	26.5	2.3	3.36	27.5	2.2	3.67	28.5	2.1	3.99
	80	25.7	2.1	3.66	28.0	2.0	4.21	30.4	1.9	4.75
NOTE: ALL CAPACITIES ARE NET, WITH INDOOR FAN HEAT ALREADY DEDUCTED. KW VALUES ARE FOR THE SYSTEM (OUTDOOR + INDOOR).										

Multipliers for determining the performance with other indoor sections.

Air Handler	Coil	MBH	COP	KW
–	FC/MC62	1.02	0.95	1.07
AHE60D	–	1.00	1.00	1.00
AHR60D	–	1.02	0.97	1.05
AHV60D	–	1.01	0.98	1.03
MV20D	FC/MC62D	1.01	0.99	1.02
MV20D	FC64D	1.01	1.03	0.98
MX20D	FC/MC62D	1.00	1.01	1.00
MX20D	FC64D	1.01	1.05	0.97

Furnace	Coil	MBH	COP	KW
T*(8,L)V*C16	FC/MC62D	1.01	0.97	1.05
T*(8,L)V*C16	FC64D	1.02	1.01	1.02
T*(8,L)V*C20	FC/MC62D	1.01	0.98	1.04
T*(8,L)V*C20	FC64D	1.02	1.02	1.01
T*(8,L)X*C16	FC/MC62D	1.01	0.98	1.04
T*(8,L)X*C16	FC64D	1.02	1.02	1.01
T*(8,L)X*C20	FC/MC62D	1.01	1.01	1.00
T*(8,L)X*C20	FC64D	1.01	1.03	0.99
T*9(C,V)*C16	FC/MC62D	1.02	0.97	1.06
T*9(C,V)*C16	FC64D	1.02	1.01	1.02

Furnace	Coil	MBH	COP	KW
T*9(C,V)*C20	FC/MC62D	1.02	0.98	1.05
T*9(C,V)*C20	FC64D	1.03	0.99	1.04
T*9(C,V)*D20	FC/MC62D	1.02	0.96	1.06
T*9(C,V)*D20	FC64D	1.02	1.00	1.02
T*9X*C16	FC/MC62D	1.01	0.98	1.04
T*9X*C16	FC64D	1.02	1.02	1.01
T*9X*C20	FC/MC62D	1.01	0.98	1.03
T*9X*C20	FC64D	1.02	1.02	1.00
T*9X*D20	FC/MC62D	1.01	0.97	1.04
T*9X*D20	FC64D	1.02	1.01	1.01
Y*(8,L)C*C16	FC/MC62D	1.01	0.97	1.05
Y*(8,L)C*C16	FC64D	1.02	1.01	1.02
Y*(8,L)C*C20	FC/MC62D	1.01	0.98	1.04
Y*(8,L)C*C20	FC64D	1.02	1.02	1.01
Y*9C*C16	FC/MC62D	1.02	0.97	1.06
Y*9C*C16	FC64D	1.02	1.01	1.02
Y*9C*C20	FC/MC62D	1.02	0.98	1.05
Y*9C*C20	FC64D	1.03	0.99	1.04
Y*9C*D20	FC/MC62D	1.02	0.96	1.06
Y*9C*D20	FC64D	1.02	1.00	1.02

HEATING PERFORMANCE DATA - HIGH CFM 2-STAGE OPERATION										
CONDENSING UNIT MODEL NO		**THGF60S41S3**								
EVAPORATOR COIL MODEL NO		**AHX60**								
AIR TEMP. ENTERING OUTDOOR UNIT	**AIR TEMP. ENTERING INDOOR COIL**	ID CFM								
		1600			1800			2000		
		MBH	COP	KW	MBH	COP	KW	MBH	COP	KW
60	60	71.2	4.5	4.60	72.4	4.7	4.56	73.6	4.8	4.52
	70	70.3	4.1	5.07	71.3	4.2	5.02	72.3	4.3	4.97
	80	69.4	3.7	5.56	70.1	3.7	5.49	70.9	3.8	5.42
47	60	62.1	4.1	4.41	62.6	4.2	4.38	63.1	4.3	4.35
	70	61.2	3.7	4.90	61.6	3.7	4.86	62.1	3.8	4.81
	80	60.2	3.3	5.37	60.6	3.3	5.31	61.1	3.4	5.25
40	60	56.4	3.9	4.29	56.8	3.9	4.27	57.2	4.0	4.25
	70	55.7	3.4	4.78	56.0	3.5	4.74	56.2	3.5	4.70
	80	55.0	3.1	5.26	55.1	3.1	5.20	55.2	3.1	5.14
30	60	49.4	3.5	4.14	49.8	3.5	4.16	50.1	3.5	4.19
	70	47.9	3.0	4.72	47.9	3.0	4.67	47.8	3.0	4.63
	80	46.4	2.6	5.31	46.0	2.6	5.19	45.6	2.6	5.07
17	60	40.1	2.9	4.00	37.4	2.9	3.73	34.8	2.9	3.46
	70	41.4	2.6	4.64	40.1	2.6	4.49	38.9	2.6	4.34
	80	41.2	2.3	5.15	41.5	2.4	5.15	41.7	2.4	5.15
10	60	36.1	2.6	3.99	36.5	2.7	4.03	37.0	2.7	4.07
	70	34.7	2.3	4.47	35.8	2.3	4.50	36.8	2.4	4.53
	80	33.4	2.0	4.94	35.0	2.1	4.96	36.6	2.2	4.98
NOTE: ALL CAPACITIES ARE NET, WITH INDOOR FAN HEAT ALREADY DEDUCTED. KW VALUES ARE FOR THE SYSTEM (OUTDOOR + INDOOR).										

Multipliers for determining the performance with other indoor sections.

Air Handler	Coil	MBH	COP	KW
–	FC/MC62	1.01	0.97	1.04
AHE60D	–	1.00	1.00	1.00
AHV60D	–	0.99	0.97	1.03
MV20D	FC/MC62D	1.00	0.99	1.01
MV20D	FC64D	1.00	1.02	0.99
MX20D	FC/MC62D	0.99	1.01	0.98
MX20D	FC64D	1.00	1.04	0.97

Furnace	Coil	MBH	COP	KW
T*(8,L)V*C20	FC/MC62D	0.99	0.96	1.04
T*(8,L)V*C20	FC64D	1.01	1.01	1.00
T*(8,L)X*C20	FC/MC62D	0.99	0.99	1.00
T*(8,L)X*C20	FC64D	0.99	1.02	0.98
T*9(C,V)*C20	FC/MC62D	1.00	0.96	1.04
T*9(C,V)*C20	FC64D	1.00	0.99	1.01
T*9(C,V)*D20	FC/MC62D	0.99	0.96	1.03
T*9(C,V)*D20	FC64D	1.00	0.99	1.01
T*9X*C20	FC/MC62D	0.98	0.97	1.02
T*9X*C20	FC64D	0.99	0.99	1.00
T*9X*D20	FC/MC62D	0.99	0.98	1.02
T*9X*D20	FC64D	0.99	1.01	0.99
Y*(8,L)C*C20	FC/MC62D	0.99	0.96	1.04
Y*(8,L)C*C20	FC64D	1.01	1.01	1.00
Y*9C*C20	FC/MC62D	1.00	0.96	1.04
Y*9C*C20	FC64D	1.00	0.99	1.01
Y*9C*D20	FC/MC62D	0.99	0.96	1.03
Y*9C*D20	FC64D	1.00	0.99	1.01

Subject to change without notice. Published in U.S.A.
Copyright © 2012 by Johnson Controls, Inc. All rights reserved.

560593-YTG-C-1012
Supersedes: 560593-YTG-B-1211

York International Corp.
5005 York Drive
Norman, OK 73069