YORK®
Heating and Air Conditioning

TECHNICAL GUIDE

SPLIT-SYSTEM HEAT PUMPS

14.5 SEER – R-410A – Single Phase

MODELS:
THGF18 THRU 60
(1.5 THRU 5 NOMINAL TONS)

AHRI CERTIFIED™ www.ahridirectory.org Unitary Small HP AHRI Standard 210/240 Certification applies only when the complete system is listed with AHRI.

Good Housekeeping Promises — Limited Warranty to Consumers — Replacement or Refund if Defective

CSA® C US

Energy Star — ENERGY STAR

ISO 9000 Registration — ISO 9001 Certified Quality Management System

Due to continuous product improvement, specifications are subject to change without notice.

Visit us on the web at
www.upgnet.com and www.york.com

Additional rating information can be found at
www.ahridirectory.org

WARRANTY

Standard 5-year limited parts warranty.
10-year limited compressor warranty.

Extended 10-year limited parts warranty when product is registered online within 90 days of purchase for replacement or closing for new home construction.

DESCRIPTION

The 14.5 SEER Series unit is the outdoor part of a versatile climate system. It is designed with a matching indoor coil component from Johnson Controls Unitary Products. Available for typical applications this climate system is supported with accessories and documents to serve specific functions.

FEATURES

- **Quality Condenser Coils -** The coil is constructed of copper tubing and enhanced aluminum fins for increased efficiency and corrosion protection.
- **Protected Compressor -** The complete scroll compressor line is internally protected against high pressure, temperature, and externally by a factory installed high pressure switch. This is accomplished by the simultaneous operation of high pressure relief valve and a temperature sensor which protects the compressor if undesirable operating conditions occur. A liquid line filter-drier further protects the compressor. The 5-ton system utilizes a two-stage compressor.
- **Durable Finish -** The cabinet is made of pre-painted steel. The pre-treated galvanized steel provides a better paint-to-steel bond, which resists corrosion and rust creep. Special primer formulas and matted-textured finish insure less fading when exposed to sunlight.
- **Lower Installed Cost -** Installation time and costs are reduced by easy power and control wiring connections. Available in sweat connect models only. The unit contains enough refrigerant for matching indoor coils and 15 feet of interconnecting piping. The small base dimension means less space is required on the ground or roof.
- **Top Discharge -** The warm air from the top mounted fan is blown up, away from the structure and any landscaping. This allows compact location on multi-unit applications.
- **Low Operating Sound Level -** The upward air flow carries the normal operating noise away from the living area. The rigid top panel effectively isolates any motor sound. Isolator mounted compressor and the rippled fins of the condenser coil muffle the normal fan motor and compressor operating sounds.
- **Low Maintenance -** Long life permanently lubricated motor-bearings need no annual servicing.
- **Easy Service Access -** Fully exposed refrigerant connections and a single panel covering the electrical controls make for easy servicing of the unit.
- **Secured Service Valves -** Secured, re-usable service valves are provided on both the liquid and vapor sweat connections for ease of evacuating and charging.
- **Agency Listed -** U.L. and C.U.L. listed - approved for outdoor application. The unit is certified in accordance with the Unitary Small Equipment certification program, which is based on AHRI Standard 210/240.

Physical and Electrical Data

MODEL		THGF18 S41S3	THGF24 S41S3	THGF30 S41S3	THGF36 S41S3	THGF42 S41S3	THGF48 S41S3	THGF60 S41S3
Unit Supply Voltage		208-230V, 1ϕ, 60Hz						
Normal Voltage Range [1]		187 to 252						
Minimum Circuit Ampacity		11.9	17.6	17.3	23.7	26.1	28.8	35.3
Max. Overcurrent Device Amps [2]		20	30	30	40	45	50	60
Min. Overcurrent Device Amps [3]		15	20	20	25	30	30	40
Compressor Type		Scroll	Scroll	Scroll	Scroll	Scroll	Scroll	2-Stage Scroll
Compressor Amps	Rated Load	9.0	13.4	12.8	17.9	19.8	28.8	35.3
	Locked Rotor	48.0	58.3	64.0	96.7	115.0	115.0	118.0
Crankcase Heater		No	No	No	No	No	No	No
Factory External Discharge Muffler		Yes	Yes	Yes	Yes	Yes	Yes	Yes
Factory External Check Valve		No	No	No	No	No	No	No
HS Kit Required with TXV [4]		No	No	No	No	No	No	No
Fan Motor Amps	Rated Load	0.7	0.8	1.3	1.3	1.3	1.3	1.3
Fan Diameter Inches		24	22	24	24	24	24	24
Fan Motor	Rated HP	1/10	1/8	1/4	1/4	1/4	1/4	1/4
	Nominal RPM	825	1075	850	850	850	850	850
	Nominal CFM	2000	2000	3900	3900	3900	3800	3800
Coil	Face Area Sq. Ft.	15.72	19.17	23.58	23.58	23.58	23.58	23.58
	Rows Deep	1	1	1	1	1	2	2
	Fin / Inches	22	22	22	22	22	18	18
Liquid Line Set OD (Field Installed)		3/8	3/8	3/8	3/8	3/8	3/8	3/8
Vapor Line Set OD (Field Installed)		3/4	3/4	3/4	3/4	7/8	7/8	1-1/8
Unit Charge (Lbs. - Oz.) [5]		6 - 15	7 - 14	9 - 14	10 - 9	10 - 14	14 - 2	14 - 2
Charge Per Foot, Oz.		0.62	0.62	0.62	0.62	0.67	0.67	0.75
Operating Weight Lbs.		145	145	176	193	198	248	290

1. Rated in accordance with ANSI/AHRI Standard 110-2002, utilization range “A”.
2. Dual element fuses or HACR circuit breaker. Maximum allowable overcurrent protection.
3. Dual element fuses or HACR circuit breaker. Minimum recommended overcurrent protection.
4. See Hard Start Kit Accessory Installation Manual for Hard Start Kit part number for each model.
5. The Unit Charge is correct for the outdoor unit, matched indoor coil, and 15 feet of refrigerant tubing. For tubing lengths other than 15 feet, add or subtract the amount of refrigerant, using the difference in length multiplied by the per foot value.

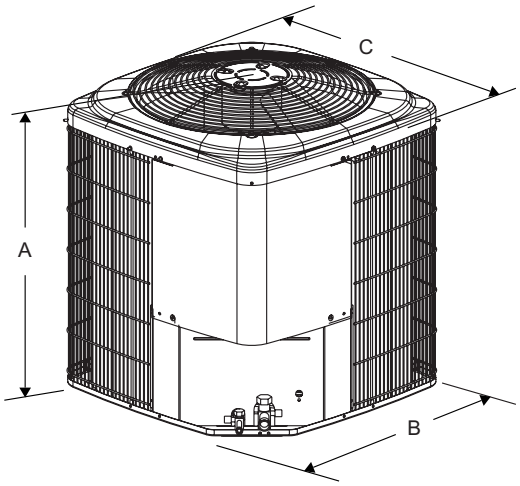

All dimensions are in inches. They are subject to change without notice. Certified dimensions will be provided upon request.

Unit Model	Dimensions (Inches)			Refrigerant Connection Service Valve Size	
	A[1]	B	C	Liquid	Vapor
18	28	34	34	3/8”	3/4”
24	40	29	29		
30	40	34	34		
36	40	34	34		
42	40	34	34		7/8”
48	40	34	34		
60	40	34	34		

1. Including Fan Guard.

System Charge for Various Matched Systems							
Outdoor Unit	THGF18S41S3	THGF24S41S3	THGF30S41S3	THGF36S41S3	THGF42S41S3	THGF48S41S3	THGF60S41S3
Required Orifice or TXV [1,2]	.051/4F1	.059/4G1	.063/4G1	.071/4H1	.075/4J1	4J1	4K1
Factory Charge, lbs-oz	6 - 15	7 - 14	9 - 14	10 - 9	10 - 14	15 - 14	14 - 2
Indoor Coil[3,4,5]	**Additional Charge, Oz**						
AHE24B	.051 / TXV + 0	.059 / TXV + 0	–	–	–	–	–
AHE30B	.051 / TXV + 0	.059 / TXV + 0	–	–	–	–	–
AHE36C	–	–	.063 / TXV + 0	.071 / TXV + 0	–	–	–
AHE42D	–	–	–	.071 / TXV + 11	.073 / TXV - 6	–	–
AHE48D	–	–	–	.071 / TXV + 31	.073 / TXV - 5	–	–
AHE60D	–	–	–	–	.075 / TXV + 0	TXV + 0	TXV + 0
AV*36	.051 / TXV + 13	.059 / TXV + 12	.063 / TXV + 0	.071 / TXV + 0	–	–	–
AV*48	–	–	–	TXV + 31	–	–	–
AHX30	.051 / TXV + 0	.059 / TXV + 0	–	–	–	–	–
AHX36	–	.059 / TXV + 12	.063 / TXV + 0	.071 / TXV + 0	–	–	–
AHX42	–	–	–	.071 / TXV + 11	–	–	–
AHX48	–	–	–	.071 / TXV + 31	–	–	–
AHX60	–	–	–	–	.075 / TXV + 0	TXV + 0	TXV + 0
FC/MC/PC/UC32	.051 / TXV + 0	.059 / TXV + 0	–	–	–	–	–
FC/MC/PC/UC35	.051 / TXV + 0	.059 / TXV + 0	–	–	–	–	–
FC/MC/PC/UC37	.051 / TXV + 13	.059 / TXV + 12	.063 / TXV + 0	.071 / TXV + 0	–	–	–
FC/MC/PC/UC43	.051 / TXV + 13	.059 / TXV + 12	.063 / TXV + 0	.071 / TXV + 0	–	–	–
FC/MC/PC/UC48	–	–	–	.071 / TXV + 11	.073 / TXV - 6	–	–
FC/MC/PC/UC60	–	–	–	–	.073 / TXV - 5	–	–
FC/PC62	–	–	–	–	.075 / TXV + 0	TXV + 0	TXV + 0
FC64	–	–	–	–	–	TXV + 8	TXV + 8
F6FP030H06	.051 / TXV + 0	.059 / TXV + 0	–	–	–	–	–
F6FP036H06	–	.059 / TXV + 0	–	–	–	–	–
F6FP042H06	–	–	.063 / TXV + 17	.071 / TXV + 11	–	–	–
F6FP060H06	–	–	–	–	.075 / TXV + 0	TXV + 0	–
Some of the combinations shown in the above System Charge table require Advanced Main Air Circulating Fan indoor product. For approved coil only matches, please see the “COOLING CAPACITY - Upflow, Downflow & Horizontal Furnaces and Coils” table.							

FOOTNOTES:

1. For applications requiring a TXV use S1-1TVM*** series kit.
2. Approved orifice shipped with outdoor unit.
3. Systems matched with furnace or air handlers not equipped with blower-off delays may require blower Time Delay Kit S1-2FD06700224.
4. PC coils cannot be used in downflow or horizontal applications. FC coils cannot be used in horizontal applications.
5. Refer to Cooling and Heating Performance Data tables for actual performance for specified system matches.

PROCEDURES:

1. Unit factory charge listed on the unit nameplate includes refrigerant for the condenser, the smallest evaporator, and 15 feet of interconnecting line tubing.
2. Verify the TXV or orifice and additional charge required for specific evaporator coil in the system using the above table.
3. Add additional charge for the amount of interconnecting line tubing greater than 15 feet at the rate specified in Physical and Electrical Data Table.
4. For TXV match charge weight needs to be weighed in for specific coil match and lineset length.
5. Permanently mark the unit nameplate with the total system charge. Total System Charge = Base Charge (as shipped) + charge adder for evaporator + charge adder for line set.

COOLING CAPACITY - With Air Handler Coils

UNIT MODEL	AIR HANDLER		COIL MODEL[1]	COOLING				
	MODEL	WIDTH		RATED CFM	NET MBH		SEER	EER
					TOTAL	SENS.		
14.5 SEER HP WITH AIR HANDLERS								
THGF18S41S3	AHE24B	17	–	585	18.0	13.3	14.50	12.00
	AHE30B	17	–	660	18.0	13.1	15.00	12.50
	AV*36	21	–	630	18.0	13.3	15.00	12.50
	AHX30	17	–	640	18.0	13.3	15.00	12.50
	F6FP030	17	–	640	18.0	13.3	15.00	12.50
	MV12B	17	FC/MC35B	600	18.0	13.0	15.00	12.50
	MV12B	17	FC/MC43B	600	18.0	13.3	15.00	12.50
	MX12B	17	FC/MC35B	660	18.0	13.8	15.00	12.50
	MX12B	17	FC/MC43B	620	18.0	13.6	15.00	12.50
THGF24S41S3	AHE24B	17	–	825	23.0	17.4	15.00	12.50
	AHE30B	17	–	800	23.0	17.4	15.00	12.50
	AV*36	21	–	725	22.8	16.8	15.00	12.50
	AHX30	17	–	800	22.8	17.1	15.00	12.50
	AHX36	21	–	820	23.0	17.4	15.00	12.50
	F6FP030	17	–	850	22.8	17.3	14.50	12.00
	F6FP036	21	–	855	22.8	17.4	15.00	12.50
	MV12B	17	FC/MC35B	800	22.8	17.2	15.00	12.50
	MV12B	17	FC/MC43B	800	23.4	18.0	15.00	12.50
	MX12B	17	FC/MC35B	815	23.2	17.5	15.00	12.50
	MX12B	17	FC/MC43B	735	23.0	16.9	15.00	12.50
THGF30S41S3	AHE36C	21	–	1000	30.0	21.7	15.00	12.50
	AV*36	21	–	960	29.2	21.8	15.00	12.50
	AHX36	21	–	1030	29.4	22.2	15.00	12.50
	F6FP042	21	–	1065	29.4	22.2	15.00	12.50
	MV12B	17	FC/MC43B	1000	29.0	21.6	15.00	12.50
	MV16C	21	FC/MC43C	1000	29.0	21.6	15.00	12.50
	MX12B	17	FC/MC43B	1095	30.0	22.3	15.00	12.50
	MX16C	21	FC/MC43C	970	30.0	21.5	15.00	12.50
THGF36S41S3	AHE36C	21	–	1190	35.2	26.2	14.50	12.00
	AHE42D	21	–	1180	35.6	26.4	15.00	12.50
	AHE48D	24	–	1195	35.8	26.6	15.00	12.50
	AV*36	21	–	1190	35.4	26.4	14.50	12.00
	AV*48	24	–	1220	36.0	26.8	15.00	12.50
	AHX36	21	–	1210	35.4	26.6	14.50	12.00
	AHX42	21	–	1190	35.8	26.4	15.00	12.50
	AHX48	24	–	1255	36.0	27.2	15.00	12.50
	F6FP042	24	–	1290	36.0	27.6	15.00	12.50
	MV12B	17	FC/MC43B	1225	35.4	26.6	14.35	12.00
	MV16C	21	FC/MC43C	1200	35.2	26.4	14.50	12.00
	MV12D	24	FC/MC48D	1160	35.6	26.0	15.00	12.50
	MX12B	17	FC/MC43B	1220	35.2	26.2	14.00	12.00
	MX16C	21	FC/MC43C	1140	35.6	26.6	15.00	12.50
	MX12D	24	FC/MC48D	1225	36.0	26.8	14.50	12.00
	MX16C	21	FC/MC48C	1150	35.6	26.2	15.00	12.50
THGF42S41S3	AHE42D	21	–	1385	40.5	30.2	15.00	12.50
	AHE48D	24	–	1385	40.5	30.0	15.00	12.50
	AHE60D	24	–	1390	40.0	30.8	15.00	12.50
	AHX60	24	–	1440	41.0	31.6	15.00	12.50
	F6FP060	24	–	1400	40.5	31.2	15.00	12.50
	MV16C	21	FC/MC48C	1400	40.5	30.0	14.50	12.00
	MV20D	24	FC/MC48D	1470	41.0	31.0	15.00	12.50

For notes, see Page 5.

COOLING CAPACITY - With Air Handler Coils (Continued)

UNIT MODEL	AIR HANDLER		COIL MODEL[1]	COOLING				
	MODEL	WIDTH		RATED CFM	NET MBH TOTAL	NET MBH SENS.	SEER	EER
THGF42S41S3	MV16C	21	FC/MC60C	1400	40.5	30.2	14.50	12.00
	MV20D	24	FC/MC60D	1400	40.5	30.2	15.00	12.50
	MV20D	24	FC/MC62D	1400	40.5	31.2	15.00	12.50
	MX16C	21	FC/MC48C	1390	40.5	30.2	15.00	12.50
	MX20D	24	FC/MC48D	1415	40.5	30.0	15.00	12.50
	MX16C	21	FC/MC60C	1420	40.5	30.4	15.00	12.50
	MX20D	24	FC/MC60D	1470	41.0	31.4	15.00	12.50
	MX20D	24	FC/MC62D	1470	40.5	31.8	15.00	12.50
THGF48S41S3	AHE60D	24	–	1565	47.0	35.4	15.00	12.50
	AHX60	24	–	1570	48.0	35.6	15.00	12.50
	F6FP060	24	–	1570	48.0	35.6	15.00	12.50
	MV20D	24	FC/MC62D	1630	48.0	36.2	15.00	12.50
	MV20D	24	FC64D	1630	48.0	36.2	15.00	12.50
	MX20D	24	FC/MC62D	1605	47.0	35.1	15.00	12.50
	MX20D	24	FC64D	1605	47.0	35.7	15.00	12.50

Rated in accordance with DOE test procedures (Federal Register 12-27-79 and 3-18-88) and AHRI Standard 210/240.
Cooling MBH based on 80 °F entering air temperature, 50% RH (Relative Humidity), and rated air flow.
EER (Energy Efficiency Ratio) is the total cooling output in BTUs at 95 °F outdoor ambient divided by the total electric power in watt-hours at those conditions.
SEER (Seasonal Energy Efficiency Ratio) is the total cooling output in BTUs during a normal annual usage period for cooling divided by the total electric power input in watt-hours during the same period.

1. MC coils available with a factory installed horizontal drain pan. See price pages for specific model number.

— = Not applicable.
MA Modular Air Handlers use Coil Only Ratings.

COOLING CAPACITY - With Air Handler Coils

UNIT MODEL	AIR HANDLER		COIL MODEL[1]	STAGE	COOLING				
	MODEL	WIDTH			RATED CFM	NET MBH TOTAL	NET MBH SENS.	SEER	EER
14.5 SEER HP WITH AIR HANDLERS									
THGF60S41S3	AHE60D	24	–	1	1160	46.0	29.8	15.00	12.20
				2	1835	57.0	41.0		
	AHX60	24	–	1	1160	47.5	30.5	14.50	12.00
				2	1855	57.0	40.5		
	MV20D	24	FC/MC62D	1	1160	48.0	31.0	14.50	12.00
				2	1855	57.0	40.5		
	MV20D	24	FC64D	1	1160	50.0	32.6	15.00	12.50
				2	1855	59.0	42.5		
	MX20D	24	FC/MC62D	1	1390	48.0	32.4	15.00	12.50
				2	1795	57.5	41.0		
	MX20D	24	FC64D	1	1390	49.5	33.8	15.00	12.50
				2	1795	58.0	42.0		

Rated in accordance with DOE test procedures (Federal Register 12-27-79 and 3-18-88) and AHRI Standard 210/240.
Cooling MBH based on 80 °F entering air temperature, 50% RH (Relative Humidity), and rated air flow.
EER (Energy Efficiency Ratio) is the total cooling output in BTUs at 95 °F outdoor ambient divided by the total electric power in watt-hours at those conditions.
SEER (Seasonal Energy Efficiency Ratio) is the total cooling output in BTUs during a normal annual usage period for cooling divided by the total electric power input in watt-hours during the same period.

1. MC coils available with a factory installed horizontal drain pan. See price pages for specific model number.

— = Not applicable.
MA Modular Air Handlers use Coil Only Ratings.

COOLING CAPACITY - Upflow, Downflow & Horizontal Furnaces and Coils (Coil Only Ratings)

UNIT MODEL	FURNACE		COIL MODEL	STAGE	COOLING				
	CFM RANGE (Min.-max.)	WIDTH			RATED CFM	NET MBH		SEER[1]	EER
						TOTAL	SENS.		
THGF18S41S3	450 - 750	17,21	FC/MC/PC35	–	600	18.0	12.6	13.20	11.35
THGF24S41S3	600 - 1000	17,21	FC/MC/PC35	–	800	22.2	16.3	13.20	11.35
THGF30S41S3	800 - 1200	17,21	FC/MC/PC43	–	1000	28.4	21.6	13.50	11.35
THGF36S41S3	1000 - 1400	21,24	FC/MC/PC48	–	1200	35.0	25.8	13.20	11.35
THGF42S41S3	1200 - 1600	21,24	FC/MC/PC48	–	1400	39.5	29.4	13.30	11.40
	1200 - 1600	–	FC/MC/PC60	–	1400	40.0	29.6	13.30	11.40
	1200 - 1600	24	FC/MC62	–	1400	37.2	30.0	13.30	11.35
THGF48S41S3	1400 - 1800	24	FC/MC62	–	1600	47.0	35.4	13.50	11.35
THGF60S41S3	1150 - 1550	24	FC/MC62	1	1350	48.0	31.8	13.30	11.35
	1600 - 2000	24	FC/MC62	2	1800	56.5	39.5	13.30	11.35

1. Requires a S1-2FD06700224 Blower Time Delay unless a standard furnace is equipped with one.
MA Modular Air Handlers use Coil Only Ratings.
PSC furnaces, such as the TG8S, TGLS ,TG9S, use Coil Only Ratings.

COOLING CAPACITY - With High Efficiency Motor Furnaces

UNIT MODEL	FURNACE MODEL	COIL MODEL[1]	WIDTH	COOLING				
				RATED CFM	NET MBH		SEER	EER
					TOTAL	SENS.		
14.5 SEER HP WITH HIGH EFFICIENCY MOTOR FURNACES[2]								
THGF18S41S3	T*(8,L)X*A12	FC/MC/PC32A	14	590	18.0	13.0	15.00	12.50
	(Y*LC/T*8V/T*LV)*A12	FC/MC/PC32A	14	590	18.0	13.0	15.00	12.50
	(Y*LC/T*8V/T*LV)*B12	FC/MC/PC35B	17	650	18.0	13.4	15.00	12.50
	(Y*LC/T*8V/T*LV)*C16	FC/MC/PC35C	21	600	18.0	13.0	15.00	12.50
	(Y*9C/T*9V)*B12	FC/MC/PC35B	17	570	18.0	13.0	15.00	12.50
	(Y*9C/T*9V)*C16	FC/MC/PC35C	21	645	18.0	13.4	15.00	12.50
	(Y*LC/T*8V/T*LV)*A12	FC/MC/PC37A	14	625	18.0	13.3	15.00	12.50
	(Y*LC/T*8V/T*LV)*B12	FC/MC/PC43B	17	560	18.0	12.8	15.00	12.50
THGF24S41S3	T*(8,L)X*A12	FC/MC/PC32A	14	800	23.0	17.3	15.00	12.50
	T*(8,L)X*B12	FC/MC/PC35B	17	850	23.0	17.8	15.00	12.50
	T*(8,L)X*C16	FC/MC/PC35C	21	865	23.2	18.0	15.00	12.50
	T*(8,L)X*C20	FC/MC/PC35C	21	865	23.2	18.1	15.00	12.50
	T*9X*B12	FC/MC/PC35B	17	785	23.0	17.3	15.00	12.50
	T*9X*C16	FC/MC/PC35C	21	765	23.0	17.3	15.00	12.50
	T*9X*C20	FC/MC/PC35C	21	825	23.0	17.2	15.00	12.50
	T*(8,L)X*A12	FC/MC/PC37A	14	840	23.4	18.0	15.00	12.50
	T*(8,L)X*B12	FC/MC/PC43B	17	865	23.4	18.1	15.00	12.50
	T*(8,L)X*C16	FC/MC/PC43C	21	855	23.4	18.1	15.00	12.50
	T*9X*B12	FC/MC/PC43B	17	800	23.4	18.0	15.00	12.50
	T*9X*C16	FC/MC/PC43C	21	785	23.2	17.5	15.00	12.50
	T*9X*C20	FC/MC/PC43C	21	790	23.2	17.4	15.00	12.50
	(Y*LC/T*8V/T*LV)*A12	FC/MC/PC32A	14	775	22.8	17.1	14.50	12.00
	(Y*LC/T*8V/T*LV)*B12	FC/MC/PC35B	17	760	22.6	16.7	15.00	12.50
	(Y*LC/T*8V/T*LV)*C16	FC/MC/PC35C	21	855	23.0	17.7	15.00	12.50
	(Y*LC/T*8V/T*LV)*C20	FC/MC/PC35C	21	740	22.6	16.6	15.00	12.50
	(Y*9C/T*9V)*B12	FC/MC/PC35B	17	815	22.8	17.1	14.50	12.00
	(Y*9C/T*9V)*C16	FC/MC/PC35C	21	865	23.2	18.2	15.00	12.50
	(Y*9C/T*9V)*C20	FC/MC/PC35C	21	755	22.6	16.7	15.00	12.50
	(Y*LC/T*8V/T*LV)*A12	FC/MC/PC37A	14	805	23.2	17.9	15.00	12.50
	(Y*LC/T*8V/T*LV)*B12	FC/MC/PC43B	17	760	22.8	17.0	15.00	12.50
	(Y*LC/T*8V/T*LV)*C16	FC/MC/PC43C	21	875	23.4	18.5	15.00	12.50
	(Y*LC/T*8V/T*LV)*C20	FC/MC/PC43C	21	760	23.0	17.1	15.00	12.50
	(Y*9C/T*9V)*B12	FC/MC/PC43B	17	800	23.2	17.9	15.00	12.50
	(Y*9C/T*9V)*C16	FC/MC/PC43C	21	810	23.4	18.0	15.00	12.50
	(Y*9C/T*9V)*C20	FC/MC/PC43C	21	875	23.4	18.4	15.00	12.50

For notes, see Page 8.

COOLING CAPACITY - With High Efficiency Motor Furnaces (Continued)

UNIT MODEL	FURNACE MODEL	COIL MODEL[1]	WIDTH	COOLING				
				RATED CFM	NET MBH		SEER	EER
					TOTAL	SENS.		
14.5 SEER HP WITH HIGH EFFICIENCY MOTOR FURNACES[2]								
THGF30S41S3	T*(8,L)X*A12	FC/MC/PC37A	14	1095	29.4	23.0	15.00	12.50
	T*(8,L)X*B12	FC/MC/PC43B	17	1105	29.6	23.2	15.00	12.50
	T*(8,L)X*C16	FC/MC/PC43C	21	955	29.2	21.6	15.00	12.50
	T*9X*B12	FC/MC/PC43B	17	1095	29.4	23.0	15.00	12.50
	T*9X*C16	FC/MC/PC43C	21	1055	29.4	22.6	15.00	12.50
	(Y*LC/T*8V/T*LV)*A12	FC/MC/PC37A	14	980	28.6	21.4	14.50	12.00
	(Y*LC/T*8V/T*LV)*B12	FC/MC/PC43B	17	990	28.8	21.4	15.00	12.50
	(Y*LC/T*8V/T*LV)*C16	FC/MC/PC43C	21	990	29.0	21.6	15.00	12.50
	(Y*LC/T*8V/T*LV)*C20	FC/MC/PC43C	21	1000	29.0	21.6	15.00	12.50
	(Y*9C/T*9V)*B12	FC/MC/PC43B	17	1035	29.0	22.0	14.50	12.00
	(Y*9C/T*9V)*C16	FC/MC/PC43C	21	1030	29.2	22.2	15.00	12.50
	(Y*9C/T*9V)*C20	FC/MC/PC43C	21	995	29.0	21.6	15.00	12.50
THGF36S41S3	T*(8,L)X*A12	FC/MC/PC37A	14	1290	35.8	27.4	14.50	12.00
	T*(8,L)X*B12	FC/MC/PC43B	17	1300	35.8	27.4	14.50	12.00
	T*(8,L)X*C16	FC/MC/PC43C	21	1175	35.4	26.4	15.00	12.50
	T*(8,L)X*C20	FC/MC/PC43C	21	1250	36.0	27.4	15.00	12.50
	T*9X*B12	FC/MC/PC43B	17	1270	35.8	27.4	14.50	12.00
	T*9X*C16	FC/MC/PC43C	21	1260	36.0	27.4	14.50	12.00
	T*9X*C20	FC/MC/PC43C	21	1185	35.2	26.4	14.50	12.00
	(Y*LC/T*8V/T*LV)*C16	FC/MC/PC43C	21	1205	35.2	26.4	14.50	12.00
	(Y*LC/T*8V/T*LV)*C20	FC/MC/PC43C	21	1190	35.2	26.4	14.50	12.00
	(Y*9C/T*9V)*C16	FC/MC/PC43C	21	1240	35.6	27.2	14.20	12.00
	(Y*9C/T*9V)*C20	FC/MC/PC43C	21	1200	35.2	26.4	14.35	12.00
THGF42S41S3	T*(8,L)X*C16	FC/MC/PC48C	21	1360	40.5	30.2	15.00	12.50
	T*(8,L)X*C20	FC/MC/PC48C	21	1475	41.0	31.0	15.00	12.50
	T*9X*C16	FC/MC/PC48C	21	1425	40.5	29.8	14.50	12.00
	T*9X*C20	FC/MC/PC48C	21	1420	40.5	30.0	15.00	12.50
	T*9X*D20	FC/MC/PC48D	24	1435	40.5	30.0	15.00	12.50
	T*(8,L)X*C16	FC/PC60C	21	1360	40.5	30.4	15.00	12.50
	T*(8,L)X*C20	FC/PC60C	21	1485	41.0	31.4	15.00	12.50
	T*9X*C16	FC/PC60C	21	1460	40.5	30.2	14.50	12.00
	T*9X*C20	FC/PC60C	21	1460	40.5	30.2	15.00	12.50
	T*9X*D20	FC/MC/PC60D	24	1515	41.5	31.8	15.00	12.50
	T*(8,L)X*C16	FC/MC62D	21	1360	41.0	31.2	15.00	12.50
	T*(8,L)X*C20	FC/MC62D	21	1485	41.0	32.2	15.00	12.50
	T*9X*C16	FC/MC62D	21	1460	40.5	31.0	14.50	12.00
	T*9X*C20	FC/MC62D	21	1460	40.5	31.2	15.00	12.50
	T*9X*D20	FC/MC62D	24	1425	40.5	31.2	15.00	12.50
	(Y*LC/T*8V/T*LV)*C16	FC/MC/PC48C	21	1330	39.5	29.2	14.50	12.00
	(Y*LC/T*8V/T*LV)*C20	FC/MC/PC48C	21	1410	40.0	29.8	14.50	12.00
	(Y*9C/T*9V)*C16	FC/MC/PC48C	21	1395	40.0	29.8	14.50	12.00
	(Y*9C/T*9V)*C20	FC/MC/PC48C	21	1430	40.0	29.6	14.00	11.75
	(Y*9C/T*9V)*D20	FC/MC/PC48D	24	1450	40.0	29.8	14.50	12.00
	(Y*LC/T*8V/T*LV)*C16	FC/PC60C	21	1420	40.0	30.0	14.50	12.00
	(Y*LC/T*8V/T*LV)*C20	FC/PC60C	21	1340	40.5	30.2	14.50	12.00
	(Y*9C/T*9V)*C16	FC/PC60C	21	1445	40.0	29.8	14.00	11.75
	(Y*9C/T*9V)*C20	FC/PC60C	21	1445	40.0	30.0	14.00	12.00
	(Y*9C/T*9V)*D20	FC/MC/PC60D	24	1445	40.0	30.0	14.50	12.00
	(Y*LC/T*8V/T*LV)*C16	FC/MC62D	21	1420	40.5	31.0	14.50	12.00
	(Y*LC/T*8V/T*LV)*C20	FC/MC62D	21	1410	40.5	31.2	15.00	12.50
	(Y*9C/T*9V)*C16	FC/MC62D	21	1445	40.0	30.8	14.00	11.50
	(Y*9C/T*9V)*C20	FC/MC62D	21	1445	40.5	30.8	14.50	12.00
	(Y*9C/T*9V)*D20	FC/MC62D	24	1455	40.5	31.0	14.50	12.00

For notes, see Page 8.

COOLING CAPACITY - With High Efficiency Motor Furnaces (Continued)

UNIT MODEL	FURNACE MODEL	COIL MODEL[1]	WIDTH	COOLING				
				RATED CFM	NET MBH		SEER	EER
					TOTAL	SENS.		
14.5 SEER HP WITH HIGH EFFICIENCY MOTOR FURNACES[2]								
THGF48S41S3	T*(8,L)X*C16	FC/MC62D	21	1610	48.0	36.2	14.50	12.00
	T*(8,L)X*C20	FC/MC62D	21	1665	48.0	36.2	14.50	12.00
	T*9X*C16	FC/MC62D	21	1550	48.0	36.0	14.50	12.00
	T*9X*C20	FC/MC62D	21	1595	48.0	36.2	14.50	12.00
	T*9X*D20	FC/MC62D	24	1610	48.0	36.0	14.50	12.00
	T*(8,L)X*C16	FC64D	21	1610	48.0	36.2	15.00	12.50
	T*(8,L)X*C20	FC64D	21	1665	48.0	36.2	15.00	12.50
	T*9X*C16	FC64D	21	1550	48.0	36.2	15.00	12.50
	T*9X*C20	FC64D	21	1595	48.0	36.2	15.00	12.50
	T*9X*D20	FC64D	24	1610	48.0	36.2	14.50	12.00
	(Y*LC/T*8V/T*LV)*C16	FC/MC62D	21	1635	48.0	36.0	14.50	12.00
	(Y*LC/T*8V/T*LV)*C20	FC/MC62D	21	1615	48.0	36.0	14.50	12.00
	(Y*9C/T*9V)*C16	FC/MC62D	21	1590	47.5	36.0	14.35	12.00
	(Y*9C/T*9V)*C20	FC/MC62D	21	1655	47.5	35.8	14.05	12.00
	(Y*9C/T*9V)*D20	FC/MC62D	24	1630	47.5	35.8	14.25	12.00
	(Y*LC/T*8V/T*LV)*C16	FC64D	21	1635	48.0	36.2	14.50	12.00
	(Y*LC/T*8V/T*LV)*C20	FC64D	21	1615	48.0	36.2	14.50	12.00
	(Y*9C/T*9V)*C16	FC64D	21	1590	48.0	36.2	14.50	12.00
	(Y*9C/T*9V)*C20	FC64D	21	1655	48.0	36.2	14.25	12.00
	(Y*9C/T*9V)*D20	FC64D	24	1630	48.0	36.2	14.50	12.00

1. MC coils available with a factory installed horizontal drain pan. See price pages for specific model number.
2. High Efficiency Motor Furnaces have B.O.D (Blower on Delay) standard.

PSC furnaces, such as the TG8S, TGLS ,TG9S, use Coil Only Ratings.

UNIT MODEL	FURNACE MODEL	COIL MODEL[1]	WIDTH	STAGE	COOLING				
					RATED CFM	NET MBH		SEER	EER
						TOTAL	SENS.		
14.5 SEER HP WITH HIGH EFFICIENCY MOTOR FURNACES[2]									
THGF60S41S3	T*(8,L)X*C20	FC/MC62D	21	1	835	44.0	27.0	14.50	12.00
				2	1665	57.0	39.5		
	T*9X*C20	FC/MC62D	21	1	1220	48.5	31.6	14.50	12.00
				2	1595	56.5	38.5		
	T*9X*D20	FC/MC62D	24	1	1240	48.5	31.8	14.50	12.00
				2	1645	56.5	39.0		
	T*(8,L)X*C20	FC64D	21	1	835	46.5	28.2	15.00	12.50
				2	1665	58.5	41.0		
	T*9X*C20	FC64D	21	1	1220	50.5	33.2	15.00	12.50
				2	1595	58.0	40.0		
	T*9X*D20	FC64D	24	1	1240	50.5	33.4	15.00	12.50
				2	1645	58.5	40.5		
	(Y*LC/T*8V/T*LV)*C20	FC/MC62D	21	1	1015	46.0	29.2	14.50	12.00
				2	1615	56.5	38.5		
	(Y*9C/T*9V)*C20	FC/MC62D	21	1	1040	46.5	29.4	14.50	12.00
				2	1655	56.0	38.5		
	(Y*9C/T*9V)*D20	FC/MC62D	24	1	1085	47.0	29.8	14.50	12.00
				2	1630	56.0	38.5		
	(Y*LC/T*8V/T*LV)*C20	FC64D	21	1	1015	48.5	30.6	15.00	12.50
				2	1615	58.0	40.0		
	(Y*9C/T*9V)*C20	FC64D	21	1	1040	49.0	30.8	15.00	12.25
				2	1655	57.5	40.0		
	(Y*9C/T*9V)*D20	FC64D	24	1	1085	49.0	31.4	15.00	12.50
				2	1630	57.5	40.0		

1. MC coils available with a factory installed horizontal drain pan. See price pages for specific model number.
2. High Efficiency Motor Furnaces have B.O.D (Blower on Delay) standard.

PSC furnaces, such as the TG8S, TGLS ,TG9S, use Coil Only Ratings.

HEATING CAPACITY - With Air Handler Coils

UNIT MODEL*	AIR HANDLER	COIL[1] MODEL	HEATING[2]						
			47°F			17°F			HSPF
			MBH	COP	KW	MBH	COP	KW	STD
14.5 SEER AC WITH AIR HANDLERS									
THGF18S41S3	AHE24B	–	18.0	3.82	1.38	11.0	2.50	1.29	8.20
	AHE30B	–	18.0	3.88	1.36	10.9	2.54	1.26	8.50
	AV*36	–	18.0	3.98	1.33	10.8	2.62	1.21	8.50
	AHX30	–	18.0	3.88	1.36	10.9	2.52	1.27	8.50
	F6FP030	–	18.0	3.88	1.36	10.9	2.54	1.26	8.50
	MV12B	FC/MC35B	18.0	3.76	1.40	11.0	2.48	1.30	8.50
	MV12B	FC/MC43B	18.0	3.90	1.35	10.9	2.56	1.25	8.50
	MX12B	FC/MC35B	18.0	3.96	1.33	10.9	2.56	1.25	8.50
	MX12B	FC/MC43B	18.0	3.96	1.33	10.9	2.60	1.23	8.50
THGF24S41S3	AHE24B	–	22.2	3.68	1.77	13.7	2.44	1.65	8.50
	AHE30B	–	22.2	3.68	1.77	13.7	2.44	1.65	8.50
	AV*36	–	22.0	3.70	1.74	14.8	2.50	1.73	8.50
	AHX30	–	22.2	3.64	1.79	13.7	2.42	1.66	8.50
	AHX36	–	22.4	3.70	1.77	15.1	2.46	1.80	8.50
	F6FP030	–	22.2	3.64	1.79	15.1	2.42	1.83	8.20
	F6FP036	–	22.2	3.68	1.77	15.0	2.46	1.79	8.50
	MV12B	FC/MC35B	22.2	3.68	1.77	14.9	2.46	1.77	8.50
	MV12B	FC/MC43B	22.2	3.82	1.70	14.9	2.54	1.72	8.50
	MX12B	FC/MC35B	22.0	3.72	1.73	13.6	2.46	1.62	8.50
	MX12B	FC/MC43B	22.0	3.70	1.74	13.5	2.48	1.59	8.50
THGF30S41S3	AHE36C	–	30.0	4.08	2.15	20.4	2.62	2.28	9.00
	AV*36	–	29.8	3.98	2.19	18.6	2.74	1.99	9.00
	AHX36	–	30.0	4.00	2.20	18.7	2.76	1.99	9.00
	F6FP042	–	30.0	4.00	2.20	18.7	2.76	1.99	9.00
	MV12B	FC/MC43B	30.0	3.88	2.27	18.8	2.68	2.06	9.00
	MV16C	FC/MC43C	30.0	3.92	2.24	18.8	2.70	2.04	9.00
	MX12B	FC/MC43B	30.0	4.10	2.14	20.6	2.60	2.32	9.00
	MX16C	FC/MC43C	30.0	4.04	2.18	20.4	2.60	2.30	9.00
THGF36S41S3	AHE36C	–	35.6	3.68	2.83	24.4	2.50	2.86	8.20
	AHE42D	–	35.6	3.70	2.82	24.2	2.52	2.81	9.00
	AHE48D	–	36.0	3.70	3.09	24.0	2.52	2.79	9.00
	AV*36	–	36.0	3.78	2.79	24.2	2.54	2.79	9.00
	AV*48	–	36.0	3.84	2.75	22.2	2.56	2.54	9.00
	AHX36	–	36.0	3.82	2.76	24.2	2.56	2.77	9.00
	AHX42	–	36.0	3.84	2.75	22.2	2.56	2.54	9.00
	AHX48	–	36.0	3.70	3.09	24.0	2.52	2.79	9.00
	F6FP042	–	36.0	3.88	2.72	24.4	2.60	2.75	9.00
	MV12B	FC/MC43B	36.0	3.74	2.82	24.4	2.52	2.84	8.20
	MV16C	FC/MC43C	36.0	3.74	2.82	24.2	2.52	2.81	9.00
	MV12D	FC/MC48D	35.6	3.72	2.80	24.2	2.50	2.84	8.20
	MX12B	FC/MC43B	35.6	3.62	2.88	24.4	2.42	2.95	8.20
	MX16C	FC/MC43C	35.6	3.74	2.79	24.0	2.50	2.81	9.00
	MX12D	FC/MC48D	35.6	3.72	2.80	24.2	2.50	2.84	8.20
	MX16C	FC/MC48C	35.6	3.68	2.83	24.0	2.52	2.79	9.00
THGF42S41S3	AHE42D	–	38.0	3.82	2.91	26.0	2.66	2.86	9.00
	AHE48D	–	38.0	3.82	2.91	26.0	2.66	2.86	9.00
	AHE60D	–	38.5	3.90	2.89	25.4	2.64	2.82	9.00
	AHX60	–	38.5	3.92	2.88	25.6	2.66	2.82	9.00
	F6FP060	–	38.5	3.92	2.88	25.6	2.64	2.84	9.00
	MV16C	FC/MC48C	38.5	3.78	2.98	26.2	2.64	2.91	8.20
	MV20D	FC/MC48D	38.5	3.88	2.91	26.2	2.68	2.86	9.00

For notes, see Page 10.

HEATING CAPACITY - With Air Handler Coils (Continued)

UNIT MODEL*	AIR HANDLER	COIL[1] MODEL	HEATING[2]						
			47°F			17°F			HSPF
			MBH	COP	KW	MBH	COP	KW	STD
14.5 SEER AC WITH AIR HANDLERS									
THGF42S41S3	MV16C	FC/MC60C	39.0	3.96	2.89	28.8	2.94	2.87	8.20
	MV20D	FC/MC60D	38.5	4.00	2.82	28.6	2.96	2.83	9.00
	MV20D	FC/MC62D	38.5	3.90	2.89	25.6	2.64	2.84	9.00
	MX16C	FC/MC48C	38.0	3.86	2.88	26.0	2.68	2.84	9.00
	MX20D	FC/MC48D	38.0	3.86	2.88	26.0	2.68	2.84	9.00
	MX16C	FC/MC60C	38.5	4.02	2.81	28.6	2.98	2.81	9.00
	MX20D	FC/MC60D	38.5	4.10	2.75	28.6	3.04	2.76	9.00
	MX20D	FC/MC62D	38.5	3.98	2.83	25.6	2.68	2.80	9.00
THGF48S41S3	AHE60D	–	47.0	3.80	3.62	32.2	2.62	3.60	9.00
	AHX60	–	48.0	3.82	3.68	31.6	2.60	3.56	9.00
	F6FP060	–	48.0	3.82	3.68	31.6	2.60	3.56	9.00
	MV20D	FC/MC62D	48.0	3.82	3.68	31.8	2.60	3.58	9.00
	MV20D	FC64D	48.0	3.86	3.64	32.2	2.66	3.55	9.00
	MX20D	FC/MC62D	47.0	3.88	3.55	32.0	2.66	3.52	9.00
	MX20D	FC64D	47.0	3.98	3.46	32.4	2.74	3.46	9.00

1. Rated CFM same as for cooling.
2. Heating MBH based on AHRI standards of 70 °F DB (Dry Bulb) entering indoor air, 72% RH (Relative Humidity) outdoor air with 25 feet of interconnecting piping and no supplemental electric heat operation.

COP equals MBH output divided by (total KW input x 3.412).
HSPF (Heating Seasonal Performance Factor) is the total heating output during a normal annual usage period for heating divided by the total electric power input during the same period.
MA Modular Air Handlers use Coil Only Ratings.
— = Not Applicable.

HEATING CAPACITY - With Air Handler Coils

UNIT MODEL	AIR HANDLER	COIL[1] MODEL	HEATING[2]					
			STAGE	RATED CFM	NET MBH		HSPF	COP @ 47
					47 OD	17 OD		
14.5 SEER HP WITH AIR HANDLERS								
THGF60S41S3	AHE60D	–	1	1160	43.0	–	–	3.36
			2	1835	58.0	40.0	9.00	3.70
			2	1160	55.0	0.0	8.85	3.00
	AHX60	–	1	1160	43.1	–	–	–
			2	1855	58.0	40.0	9.00	3.72
			2	1170	57.5	40.0	8.90	3.24
	MV20D	FC/MC62D	1	1160	43.0	–	–	–
			2	1855	57.0	40.5	9.00	3.66
			2	1160	54.9	39.0	8.85	3.04
	MV20D	FC64D	1	1160	43.0	–	–	3.44
			2	1855	60.0	40.5	9.00	3.76
			2	1160	58.0	39.0	8.90	3.12
	MX20D	FC/MC62D	1	1390	44.0	–	–	3.50
			2	1795	58.0	39.5	9.00	3.72
			2	1390	55.5	0.0	8.6	3.22
	MX20D	FC64D	1	1390	44.5	–	–	3.62
			2	1795	58.0	40.0	9.00	3.82
			2	1390	55.5	0.0	8.6	3.30

1. Rated CFM same as for cooling.
2. Heating MBH based on AHRI standards of 70 °F DB (Dry Bulb) entering indoor air, 72% RH (Relative Humidity) outdoor air with 25 feet of interconnecting piping and no supplemental electric heat operation.

COP equals MBH output divided by (total KW input x 3.412).
HSPF (Heating Seasonal Performance Factor) is the total heating output during a normal annual usage period for heating divided by the total electric power input during the same period.
MA Modular Air Handlers use Coil Only Ratings.
— = Not Applicable.

HEATING CAPACITY - Upflow, Downflow, and Horizontal Furnaces and Coils (Coil Only Ratings)

UNIT MODEL*	COIL[1] MODEL	HEATING[2]						
		47 °F			17 °F			HSPF
		MBH	COP	KW	MBH	COP	KW	STD
THGF18S41S3	FC/MC/PC35	18.0	3.46	1.56	11.4	2.30	1.45	7.70
THGF24S41S3	FC/MC/PC35	22.6	3.36	1.99	14.2	2.24	1.86	7.70
THGF30S41S3	FC/MC/PC43	30.0	3.72	2.43	19.4	2.56	2.22	8.00
THGF36S41S3	FC/MC/PC48	36.0	3.50	3.31	25.0	2.38	3.08	8.00
THGF42S41S3	FC/MC/PC48	39.0	3.64	3.14	26.8	2.54	3.09	8.20
	FC/MC/PC60	39.5	3.78	3.06	29.4	2.82	3.05	8.20
	FC/MC62	39.0	3.70	3.09	26.2	2.52	3.05	8.00
THGF48S41S3	FC/MC62	48.0	3.66	4.12	33.2	2.52	3.86	8.00

1. Rated CFM same as for cooling.
2. Heating MBH based on AHRI standards of 70 °F DB (Dry Bulb) entering indoor air, 72% RH (Relative Humidity) outdoor air with 25 feet of interconnecting piping and no supplemental electric heat operation.

COP equals MBH output divided by (total KW input x 3.412).
HSPF (Heating Seasonal Performance Factor) is the total heating output during a normal annual usage period for heating divided by the total electric power input during the same period.
MA Modular Air Handlers use Coil Only Ratings.
PSC furnaces, such as the TG8S, TGLS ,TG9S, use Coil Only Ratings.
— = Not Applicable.

HEATING CAPACITY - With Upflow, Downflow, & Horizontal Furnaces and Coils (Coil Only Ratings)

UNIT MODEL*	COIL[1] MODEL	HEATING[2]					
		STAGE	RATED CFM	NET MBH		HSPF	COP @ 47
				47 OD	17 OD		
THGF60S41S3	FC/MC62	1	1350	43.5	–	–	3.42
		2	1800	60.0	40.5	8.4	3.66
		2	1350	57.0	0.0	8.6	3.36

1. Rated CFM same as for cooling.
2. Heating MBH based on AHRI standards of 70° DB (Dry Bulb) entering indoor air, 72% RH (Relative Humidity) outdoor air with 25 feet of interconnecting piping and no supplemental electric heat operation.

COP equals MBH output divided by (total KW input x 3.412).
HSPF (Heating Seasonal Performance Factor) is the total heating output during a normal annual usage period for heating divided by the total electric power input during the same period.
MA Modular Air Handlers use Coil Only Ratings.
PSC furnaces, such as the TG8S, TGLS, and TG9S, use Coil Only Ratings.
— = Not Applicable.

HEATING CAPACITY - With High Efficiency Motor Furnaces

MODEL	FURNACE MODEL	COIL[1] MODEL	HEATING[2]						
			47°F			17°F			HSPF
			MBH	COP	KW	MBH	COP	KW	STD
14.5 SEER HP WITH HIGH EFFICIENCY MOTOR FURNACES[3]									
THGF18S41S3	T*(8,L)X*A12	FC/MC/PC32A	17.9	3.84	1.37	10.8	2.54	1.25	9.00
	(Y*LC/T*8V/T*LV)*A12	FC/MC/PC32A	18.0	3.76	1.40	11.0	2.48	1.30	8.50
	(Y*LC/T*8V/T*LV)*B12	FC/MC/PC35B	18.0	3.84	1.37	10.9	2.50	1.28	8.50
	(Y*LC/T*8V/T*LV)*C16	FC/MC/PC35C	18.0	3.82	1.38	10.9	2.52	1.27	8.50
	(Y*9C/T*9V)*B12	FC/MC/PC35B	18.0	3.80	1.39	10.9	2.50	1.28	8.50
	(Y*9C/T*9V)*C16	FC/MC/PC35C	18.0	3.84	1.37	10.9	2.50	1.28	8.50
	(Y*LC/T*8V/T*LV)*A12	FC/MC/PC37A	18.0	3.90	1.35	10.9	2.58	1.24	8.50
	(Y*LC/T*8V/T*LV)*B12	FC/MC/PC43B	18.0	3.80	1.39	10.8	2.52	1.26	8.50
THGF24S41S3	T*(8,L)X*A12	FC/MC/PC32A	22.0	3.72	1.73	14.8	2.48	1.75	8.50
	T*(8,L)X*B12	FC/MC/PC35B	22.0	3.74	1.72	14.8	2.48	1.75	8.50
	T*(8,L)X*C16	FC/MC/PC35C	22.0	3.76	1.71	14.8	2.50	1.73	8.50
	T*(8,L)X*C20	FC/MC/PC35C	22.0	3.76	1.71	14.8	2.48	1.75	8.50
	T*9X*B12	FC/MC/PC35B	22.0	3.72	1.73	14.8	2.48	1.75	8.50
	T*9X*C16	FC/MC/PC35C	22.0	3.78	1.71	14.7	2.50	1.72	9.00
	T*9X*C20	FC/MC/PC35C	22.2	3.72	1.75	14.9	2.48	1.76	8.50
	T*(8,L)X*A12	FC/MC/PC37A	22.2	3.88	1.68	14.8	2.56	1.69	8.50
	T*(8,L)X*B12	FC/MC/PC43B	22.0	3.88	1.66	14.8	2.58	1.68	8.50
	T*(8,L)X*C16	FC/MC/PC43C	22.0	3.88	1.66	14.8	2.58	1.68	8.50
	T*9X*B12	FC/MC/PC43B	22.2	3.88	1.68	14.8	2.56	1.69	8.50
	T*9X*C16	FC/MC/PC43C	22.0	3.80	1.70	14.8	2.54	1.71	9.00
	T*9X*C20	FC/MC/PC43C	22.0	3.74	1.72	14.9	2.50	1.75	8.50
	(Y*LC/T*8V/T*LV)*A12	FC/MC/PC32A	22.2	3.62	1.80	15.0	2.42	1.82	8.50
	(Y*LC/T*8V/T*LV)*B12	FC/MC/PC35B	22.0	3.56	1.81	14.9	2.40	1.82	8.50
	(Y*LC/T*8V/T*LV)*C16	FC/MC/PC35C	22.2	3.68	1.77	14.9	2.44	1.79	8.50
	(Y*LC/T*8V/T*LV)*C20	FC/MC/PC35C	21.8	3.60	1.77	14.8	2.42	1.79	8.50
	(Y*9C/T*9V)*B12	FC/MC/PC35B	22.2	3.64	1.79	15.0	2.42	1.82	8.50
	(Y*9C/T*9V)*C16	FC/MC/PC35C	22.2	3.70	1.76	15.0	2.44	1.80	8.50
	(Y*9C/T*9V)*C20	FC/MC/PC35C	22.0	3.58	1.80	14.8	2.42	1.79	8.50
	(Y*LC/T*8V/T*LV)*A12	FC/MC/PC37A	22.4	3.76	1.75	15.0	2.50	1.76	8.50
	(Y*LC/T*8V/T*LV)*B12	FC/MC/PC43B	22.0	3.68	1.75	14.9	2.46	1.77	8.50
	(Y*LC/T*8V/T*LV)*C16	FC/MC/PC43C	22.2	3.84	1.69	14.9	2.52	1.73	8.50
	(Y*LC/T*8V/T*LV)*C20	FC/MC/PC43C	22.0	3.72	1.73	14.8	2.50	1.73	8.50
	(Y*9C/T*9V)*B12	FC/MC/PC43B	22.2	3.78	1.72	15.0	2.52	1.74	8.50
	(Y*9C/T*9V)*C16	FC/MC/PC43C	22.2	3.82	1.70	14.9	2.52	1.73	8.50
	(Y*9C/T*9V)*C20	FC/MC/PC43C	22.4	3.82	1.72	14.9	2.52	1.73	8.50
THGF30S41S3	T*(8,L)X*A12	FC/MC/PC37A	30.0	4.02	2.19	18.9	2.74	2.02	9.00
	T*(8,L)X*B12	FC/MC/PC43B	30.0	4.00	2.20	18.9	2.72	2.04	9.00
	T*(8,L)X*C16	FC/MC/PC43C	30.0	3.96	2.22	18.6	2.74	1.99	9.00
	T*9X*B12	FC/MC/PC43B	30.0	3.98	2.21	18.8	2.72	2.03	9.00
	T*9X*C16	FC/MC/PC43C	30.0	3.96	2.22	18.8	2.72	2.03	9.00
	(Y*LC/T*8V/T*LV)*A12	FC/MC/PC37A	30.0	3.80	2.31	19.1	2.62	2.14	8.50
	(Y*LC/T*8V/T*LV)*B12	FC/MC/PC43B	30.0	3.86	2.28	18.9	2.66	2.08	8.50
	(Y*LC/T*8V/T*LV)*C16	FC/MC/PC43C	30.0	3.92	2.24	18.7	2.70	2.03	9.00
	(Y*LC/T*8V/T*LV)*C20	FC/MC/PC43C	30.0	3.94	2.23	18.7	2.72	2.01	9.00
	(Y*9C/T*9V)*B12	FC/MC/PC43B	30.0	3.84	2.29	19.0	2.64	2.11	8.50
	(Y*9C/T*9V)*C16	FC/MC/PC43C	30.0	3.90	2.25	18.9	2.68	2.07	9.00
	(Y*9C/T*9V)*C20	FC/MC/PC43C	30.0	3.90	2.25	18.8	2.70	2.04	9.00

For notes, see Page 14.

HEATING CAPACITY - With High Efficiency Motor Furnaces (Continued)

MODEL	FURNACE MODEL	COIL[1] MODEL	HEATING[2]						
			47°F			17°F			HSPF
			MBH	COP	KW	MBH	COP	KW	STD
14.5 SEER HP WITH HIGH EFFICIENCY MOTOR FURNACES[3]									
THGF36S41S3	T*(8,L)X*A12	FC/MC/PC37A	36.0	3.80	2.78	24.6	2.54	2.84	8.50
	T*(8,L)X*B12	FC/MC/PC43B	36.0	3.80	2.78	24.6	2.54	2.84	8.50
	T*(8,L)X*C16	FC/MC/PC43C	36.0	3.78	2.79	24.0	2.56	2.75	9.00
	T*(8,L)X*C20	FC/MC/PC43C	36.0	3.88	2.72	24.4	2.60	2.75	9.00
	T*9X*B12	FC/MC/PC43B	36.0	3.80	2.78	24.6	2.54	2.84	8.50
	T*9X*C16	FC/MC/PC43C	36.0	3.82	2.76	24.4	2.56	2.79	8.50
	T*9X*C20	FC/MC/PC43C	36.0	3.74	2.82	24.2	2.52	2.81	8.50
	(Y*LC/T*8V/T*LV)*C16	FC/MC/PC43C	36.0	3.72	2.84	24.4	2.50	2.86	8.50
	(Y*LC/T*8V/T*LV)*C20	FC/MC/PC43C	36.0	3.74	2.82	24.2	2.52	2.81	8.50
	(Y*9C/T*9V)*C16	FC/MC/PC43C	36.0	3.76	2.81	24.6	2.52	2.86	8.50
	(Y*9C/T*9V)*C20	FC/MC/PC43C	36.0	3.70	2.85	24.4	2.50	2.86	8.50
THGF42S41S3	T*(8,L)X*C16	FC/MC/PC48C	38.0	3.86	2.88	26.0	2.68	2.84	9.00
	T*(8,L)X*C20	FC/MC/PC48C	38.5	3.88	2.91	26.2	2.70	2.84	9.00
	T*9X*C16	FC/MC/PC48C	38.5	3.78	2.98	26.4	2.62	2.95	8.50
	T*9X*C20	FC/MC/PC48C	38.5	3.80	2.97	26.2	2.64	2.91	9.00
	T*9X*D20	FC/MC/PC48D	38.5	3.82	2.95	26.2	2.66	2.89	9.00
	T*(8,L)X*C16	FC/PC60C	38.5	4.04	2.79	28.6	3.00	2.79	9.00
	T*(8,L)X*C20	FC/PC60C	38.5	4.04	2.79	28.8	3.00	2.81	9.00
	T*9X*C16	FC/PC60C	39.0	3.94	2.90	28.8	2.94	2.87	8.50
	T*9X*C20	FC/PC60C	38.5	3.98	2.83	28.6	2.96	2.83	9.00
	T*9X*D20	FC/MC/PC60D	38.5	4.08	2.76	28.6	3.02	2.77	9.00
	T*(8,L)X*C16	FC/MC62D	38.5	3.94	2.86	25.4	2.66	2.80	9.00
	T*(8,L)X*C20	FC/MC62D	38.5	3.96	2.85	25.6	2.68	2.80	9.00
	T*9X*C16	FC/MC62D	38.5	3.86	2.92	25.8	2.60	2.91	9.00
	T*9X*C20	FC/MC62D	38.5	3.90	2.89	25.6	2.64	2.84	9.00
	T*9X*D20	FC/MC62D	38.5	3.90	2.89	25.6	2.64	2.84	9.00
	Y*(8,L)C*C16	FC/MC/PC48C	38.5	3.70	3.05	26.4	2.58	3.00	8.50
	Y*(8,L)C*C20	FC/MC/PC48C	38.5	3.76	3.00	26.4	2.62	2.95	8.50
	Y*9C*C16	FC/MC/PC48C	38.5	3.72	3.03	26.6	2.60	3.00	8.50
	Y*9C*C20	FC/MC/PC48C	38.5	3.70	3.05	26.6	2.58	3.02	8.20
	Y*9C*D20	FC/MC/PC48D	38.5	3.74	3.02	26.4	2.60	2.98	8.50
	Y*(8,L)C*C16	FC/PC60C	39.0	3.90	2.93	29.0	2.90	2.93	8.50
	Y*(8,L)C*C20	FC/PC60C	38.5	3.96	2.85	28.8	2.94	2.87	8.50
	Y*9C*C16	FC/PC60C	39.0	3.82	2.99	29.2	2.84	3.01	8.20
	Y*9C*C20	FC/PC60C	39.0	3.88	2.95	29.0	2.88	2.95	8.20
	Y*9C*D20	FC/MC/PC60D	39.0	3.90	2.93	29.0	2.90	2.93	8.50
	(Y*LC/T*8V/T*LV)*C16	FC/MC62D	39.0	3.84	2.98	25.8	2.60	2.91	9.00
	(Y*LC/T*8V/T*LV)*C20	FC/MC62D	38.5	3.88	2.91	25.6	2.62	2.86	9.00
	(Y*9C/T*9V)*C16	FC/MC62D	39.0	3.74	3.06	26.2	2.54	3.02	8.50
	(Y*9C/T*9V)*C20	FC/MC62D	39.0	3.78	3.02	26.0	2.56	2.98	8.50
	(Y*9C/T*9V)*D20	FC/MC62D	39.0	3.82	2.99	25.8	2.58	2.93	9.00

For notes, see Page 14.

HEATING CAPACITY - With High Efficiency Motor Furnaces (Continued)

MODEL	FURNACE MODEL	COIL[1] MODEL	HEATING[2]						
			47°F			17°F			HSPF
			MBH	COP	KW	MBH	COP	KW	STD
14.5 SEER HP WITH HIGH EFFICIENCY MOTOR FURNACES[3]									
THGF48S41S3	T*(8,L)X*C16	FC/MC62D	48.0	3.78	3.72	32.0	2.56	3.66	9.00
	T*(8,L)X*C20	FC/MC62D	48.0	3.80	3.70	31.8	2.58	3.61	9.00
	T*9X*C16	FC/MC62D	48.0	3.76	3.74	32.0	2.56	3.66	9.00
	T*9X*C20	FC/MC62D	48.0	3.80	3.70	32.0	2.58	3.63	9.00
	T*9X*D20	FC/MC62D	48.0	3.76	3.74	32.0	2.56	3.66	9.00
	T*(8,L)X*C16	FC64D	48.0	3.82	3.68	32.4	2.64	3.60	9.00
	T*(8,L)X*C20	FC64D	48.0	3.84	3.66	32.2	2.66	3.55	9.00
	T*9X*C16	FC64D	48.0	3.82	3.68	32.4	2.62	3.62	9.00
	T*9X*C20	FC64D	48.0	3.84	3.66	32.2	2.64	3.57	9.00
	T*9X*D20	FC64D	48.0	3.80	3.70	32.4	2.62	3.62	9.00
	(Y*LC/T*8V/T*LV)*C20	FC/MC62D	48.0	3.76	3.74	32.0	2.56	3.66	9.00
	(Y*9C/T*9V)*C16	FC/MC62D	48.0	3.72	3.78	32.2	2.54	3.71	9.00
	(Y*9C/T*9V)*C20	FC/MC62D	48.0	3.68	3.82	32.4	2.50	3.80	9.00
	(Y*9C/T*9V)*D20	FC/MC62D	48.0	3.72	3.78	32.2	2.52	3.74	9.00
	(Y*LC/T*8V/T*LV)*C20	FC64D	48.0	3.80	3.70	32.4	2.62	3.62	9.00
	(Y*9C/T*9V)*C16	FC64D	48.0	3.76	3.74	32.6	2.60	3.67	9.00
	(Y*9C/T*9V)*C20	FC64D	48.0	3.72	3.78	32.8	2.58	3.73	8.50
	(Y*9C/T*9V)*D20	FC64D	48.0	3.76	3.74	32.6	2.60	3.67	9.00

1. MC coils available with a factory installed horizontal drain pan. See price pages for specific model number.
2. Heating MBH based on AHRI standards of 70 °F DB (Dry Bulb) entering indoor air, 72% RH (Relative Humidity) outdoor air with 25 feet of interconnecting piping and no supplemental electric heat operation.
3. High Efficiency Motor Furnaces have B.O.D (Blower on Delay) standard.

COP equals MBH output divided by (total KW input x 3.412).

HSPF (Heating Seasonal Performance Factor) is the total heating output during a normal annual usage period for heating divided by the total electric power input during the same period.

PSC furnaces, such as the TG8S, TGLS, and TG9S, use Coil Only Ratings.

— = Not Applicable.

HEATING CAPACITY - With High Efficiency Motor Furnaces

UNIT MODEL	FURNACE MODEL	COIL MODEL[1]	HEATING[2]					
			STAGE	RATED CFM	NET MBH		HSPF	COP @ 47
					47 OD	17 OD		
14.5 SEER HP WITH HIGH EFFICIENCY MOTOR FURNACES[3]								
THGF60S41S3	T*(8,L)X*C20	FC/MC62D	1	835	42.0	–	–	2.98
			2	1665	57.0	39.5	9.00	3.64
			2	835	56.5	38.5	8.85	2.62
	T*9X*C20	FC/MC62D	1	1220	43.5	–	–	3.38
			2	1595	57.0	40.0	9.00	3.58
			2	1220	55.6	39.0	8.60	3.08
	T*9X*D20	FC/MC62D	1	1240	43.5	–	–	3.42
			2	1645	57.0	40.0	9.00	3.60
			2	1240	55.6	39.0	8.65	3.10
	T*(8,L)X*C20	FC64D	1	835	42.0	–	–	3.06
			2	1665	60.0	40.0	9.00	3.74
			2	835	56.0	39.5	8.85	2.66
	T*9X*C20	FC64D	1	1220	43.5	–	–	3.48
			2	1595	60.0	40.0	9.00	3.66
			2	1220	58.5	39.0	8.65	3.16
	T*9X*D20	FC64D	1	1240	43.5	–	–	3.50
			2	1645	60.0	40.0	9.00	3.70
			2	1240	58.5	39.0	8.70	3.18
	(Y*LC/T*8V/T*LV)*C20	FC/MC62D	1	1015	42.5	–	–	3.20
			2	1615	57.0	40.0	9.00	3.58
			2	1015	55.6	39.0	8.75	2.86
	(Y*9C/T*9V)*C20	FC/MC62D	1	1040	43.0	–	–	3.20
			2	1655	57.0	40.5	9.00	3.54
			2	1040	54.9	39.0	8.70	2.88
	(Y*9C/T*9V)*D20	FC/MC62D	1	1085	43.0	–	–	3.26
			2	1630	57.0	40.0	9.00	3.54
			2	1085	55.6	39.0	8.65	2.94
	(Y*LC/T*8V/T*LV)*C20	FC64D	1	1015	42.5	–	–	3.26
			2	1615	60.0	40.0	9.00	3.66
			2	1015	57.0	39.0	8.70	2.92
	(Y*9C/T*9V)*C20	FC64D	1	1040	42.5	–	–	3.26
			2	1655	60.0	40.5	9.00	3.62
			2	1040	57.5	39.0	8.60	2.94
	(Y*9C/T*9V)*D20	FC64D	1	1085	43.0	–	–	3.32
			2	1630	60.0	40.5	9.00	3.66
			2	1085	58.0	39.5	8.65	3.00

1. MC coils available with a factory installed horizontal drain pan. See price pages for specific model number.
2. Heating MBH based on AHRI standards of 70 °F DB (Dry Bulb) entering indoor air, 72% RH (Relative Humidity) outdoor air with 25 feet of interconnecting piping and no supplemental electric heat operation.
3. High Efficiency Motor Furnaces have B.O.D (Blower on Delay) standard.

COP equals MBH output divided by (total KW input x 3.412).

HSPF (Heating Seasonal Performance Factor) is the total heating output during a normal annual usage period for heating divided by the total electric power input during the same period.

PSC furnaces, such as the TG8S, TGLS, and TG9S, use Coil Only Ratings.

— = Not Applicable.

ACCESSORIES

Refer to Price Manual for specific model numbers.

Start Assist Kit - Provides starting torque for low voltage applications.

Blower Time Delay - Available to increase efficiency when installed. Installs on indoor section and maintains blower for approximately one minute after cooling thermostat has been satisfied.

Low Temperature Cutout (S1-2LT06700224) - Prevents heat pump operation below -10°F ambient temperature.

Compressor Blanket - Designed to further reduce the normal operating sound.

Thermal Expansion Valve Kit - S1-1TVM Series TXV kit used when required.

Outdoor Thermostat (S1-2TD06700124) - Provides additional staging of supplemental electric heat.

Thermostats - Compatible thermostat controls are available through accessory sourcing. For optimum performance and installation, refer to the UPGNET “Low Voltage Wiring Diagram” document to select and apply controls.

SOUND LEVEL - TYPICAL OCTAVE BAND SPECTRUM (without tone adjustment)

Size	Test Condition	63	125	250	500	1000	2000	4000	8000	dBA	SQI
	RSS Sound Power Calibration 1091 402	83	85	86	85	88	89	87	84	–	–
18	Cooling Mode	67	71	67	69	65	59	58	55	70	19.2
	Heating Mode	68	70	66	68	67	61	60	57	71	19.2
24	Cooling Mode	69	73	64	67	68	64	61	57	71	19.0
	Heating Mode	71	72	65	70	65	64	62	58	73	19.0
30	Cooling Mode	72	70	68	67	67	63	59	55	71	19.0
	Heating Mode	74	72	73	68	70	64	61	57	74	19.0
36	Cooling Mode	73	70	72	70	68	63	60	57	73	19.1
	Heating Mode	75	73	71	70	70	65	63	61	74	19.1
42	Cooling Mode	70	71	67	70	73	65	61	59	75	19.0
	Heating Mode	73	72	71	72	72	66	62	61	75	19.0
48	Cooling Mode	71	71	69	70	71	63	60	57	73	19.1
	Heating Mode	73	75	74	75	78	66	65	61	79	19.1
60	Cooling Mode - High Stage	73	70	69	72	75	65	62	59	77	19.1
	Heating Mode - High Stage	74	75	72	73	76	68	66.	63	79	19.0

Rated in accordance with ARI Standard 270.

TYPICAL INSTALLATION

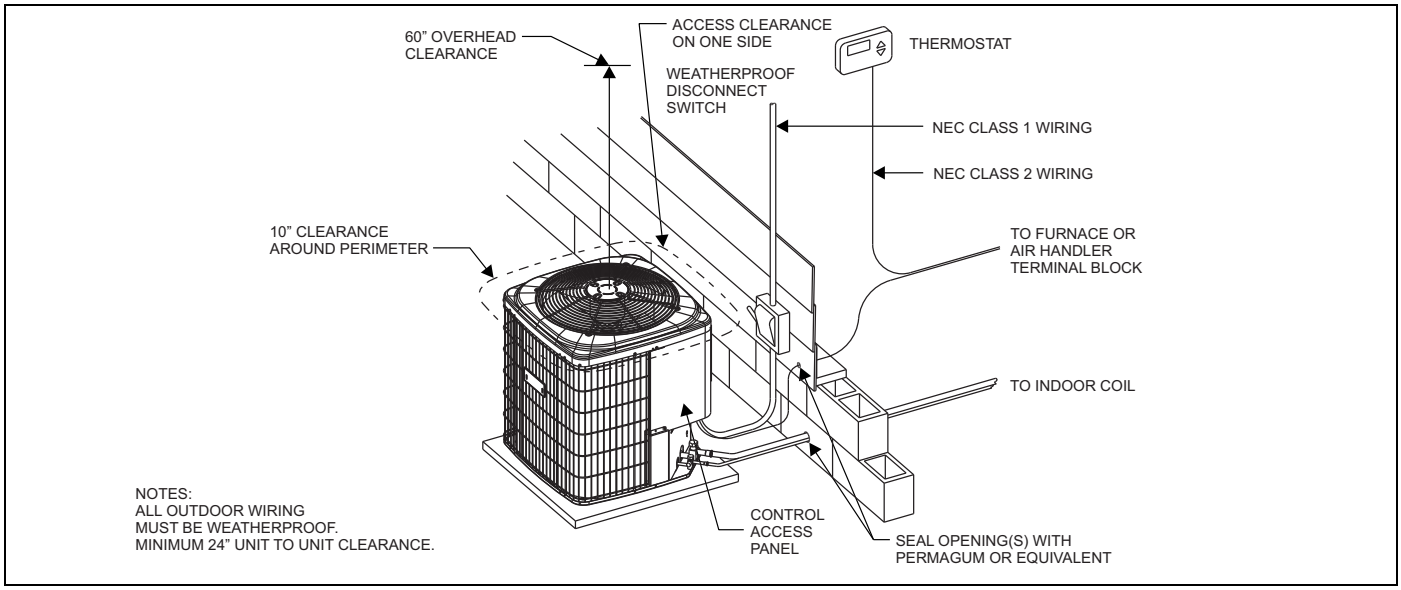

TYPICAL FIELD WIRING

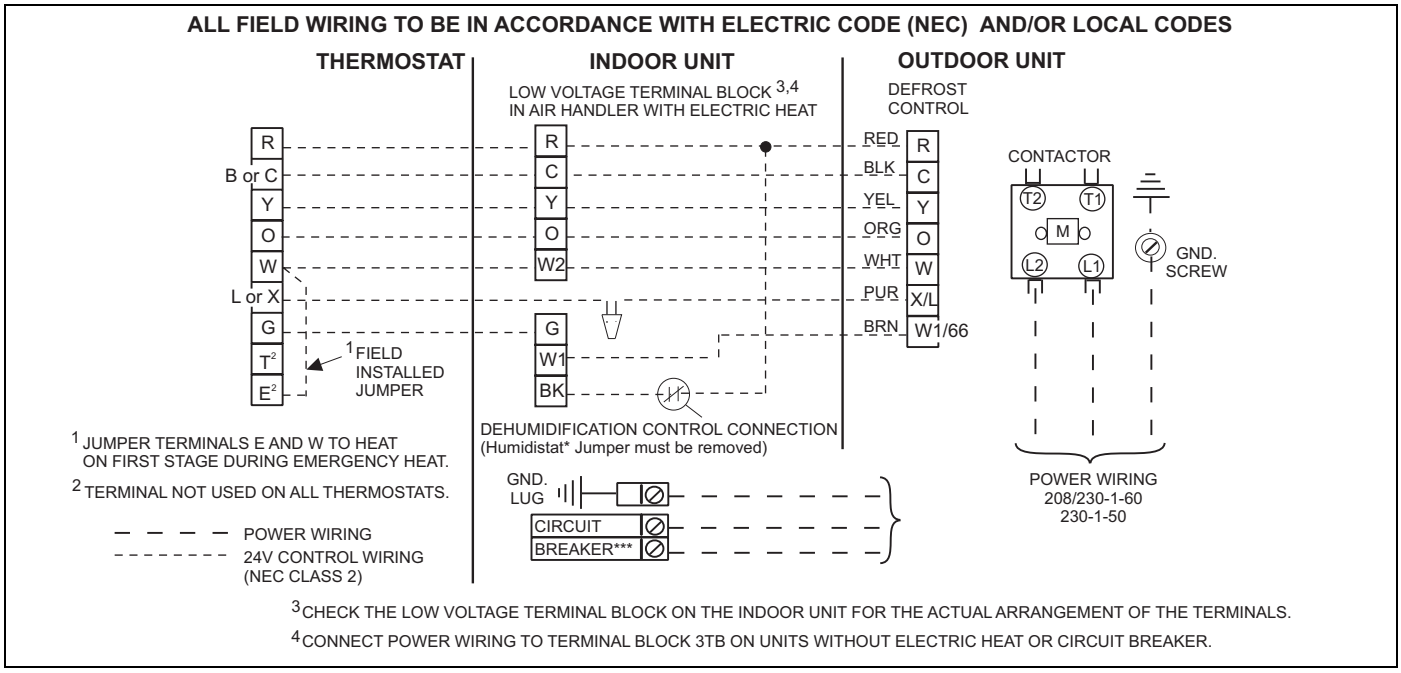

COOLING PERFORMANCE DATA																
CONDENSING UNIT MODEL NO.		**THGF18S41S3**														
INDOOR COIL MODEL NO.		**AHX30**														
CONDENSING ENTERING AIR TEMPERATURE	IDCFM	400					600					800				
	ID DB (°F)	80	80	75	80	80	80	80	75	80	80	80	80	75	80	80
	ID WB (°F)	57	62	62	67	72	57	62	62	67	72	57	62	62	67	72
65	T.C.	17.2	18.8	18.8	20.5	22.2	19.2	19.9	20.1	21.7	22.9	21.2	20.9	21.3	22.8	23.6
	S.C.	16.8	14.9	12.9	12.9	11.0	18.8	17.7	15.2	14.7	11.7	20.8	20.5	17.4	16.5	12.5
	KW	0.86	0.89	0.89	0.88	0.88	0.94	0.96	0.96	0.95	0.95	1.02	1.02	1.02	1.02	1.02
75	T.C.	16.4	17.9	17.9	19.7	21.3	18.4	19.1	19.0	20.8	22.1	20.4	20.2	20.2	21.8	22.9
	S.C.	16.1	14.5	12.5	12.5	10.5	18.0	17.1	14.8	14.4	11.5	20.0	19.8	17.0	16.3	12.4
	KW	0.99	1.02	1.02	1.02	1.02	1.08	1.09	1.09	1.09	1.10	1.17	1.16	1.17	1.17	1.18
85	T.C.	15.7	17.0	17.0	18.9	20.4	17.7	18.3	18.0	19.9	21.3	19.6	19.5	19.1	20.8	22.1
	S.C.	15.4	14.1	12.1	12.1	10.1	17.3	16.6	14.3	14.2	11.2	19.2	19.1	16.6	16.2	12.2
	KW	1.12	1.14	1.14	1.15	1.17	1.22	1.23	1.22	1.24	1.25	1.31	1.31	1.31	1.32	1.33
95	T.C.	15.0	16.1	16.1	18.1	19.6	16.9	17.4	17.0	19.0	20.4	18.8	18.8	18.0	19.8	21.3
	S.C.	14.7	13.7	11.6	11.8	9.7	16.5	16.0	13.9	13.9	10.9	18.4	18.4	16.2	16.0	12.1
	KW	1.25	1.26	1.26	1.29	1.31	1.36	1.36	1.36	1.38	1.40	1.46	1.46	1.45	1.46	1.49
105	T.C.	14.0	14.7	14.8	16.7	18.4	15.9	16.2	15.7	17.6	19.2	17.7	17.7	16.6	18.5	20.1
	S.C.	13.7	13.1	11.0	11.2	9.2	15.5	15.2	13.3	13.4	10.4	17.3	17.3	15.6	15.6	11.6
	KW	1.41	1.42	1.42	1.45	1.48	1.52	1.52	1.51	1.54	1.57	1.63	1.63	1.61	1.63	1.65
115	T.C.	13.1	13.4	13.4	15.4	17.2	14.8	15.0	14.4	16.2	18.0	16.6	16.6	15.3	17.1	18.8
	S.C.	12.8	12.5	10.5	10.6	8.7	14.5	14.4	12.7	12.9	9.9	16.2	16.2	15.0	15.1	11.2
	KW	1.56	1.57	1.57	1.60	1.65	1.68	1.68	1.67	1.70	1.74	1.80	1.80	1.77	1.80	1.82
125	T.C.	12.2	12.1	12.1	14.0	16.1	13.8	13.8	13.0	14.9	16.8	15.5	15.5	14.0	15.7	17.5
	S.C.	11.9	11.9	9.9	10.1	8.2	13.5	13.5	12.1	12.3	9.5	15.1	15.1	14.0	14.6	10.7
	KW	1.72	1.72	1.72	1.76	1.82	1.84	1.84	1.82	1.87	1.90	1.97	1.97	1.92	1.97	1.99
NOTE: ALL CAPACITIES INCLUDE INDOOR FAN HEAT. KW VALUES ARE FOR THE SYSTEM (OUTDOOR + INDOOR).																

Multipliers for determining the performance with other indoor sections.

NOTE: For dry bulb temperatures different than those listed (between 73-87 °F), sensible capacity increases by 1060 BTUH per 1000 CFM per degree above the listed temperature and decreases by 1060 BTUH per 1000 CFM per degree below the listed temperature.

Air Handler	Coil	T.C.	S.C.	KW
–	FC/MC/PC35	0.95	0.90	1.09
AHE24B	–	0.95	0.95	1.07
AHE30B	–	1.00	‘0.99	0.98
AV*36	–	1.00	1.00	1.08
F6FP030	–	1.00	1.00	1.00
MV12B	FC/MC35B	1.00	0.98	1.08
MV12B	FC/MC43B	1.00	1.00	1.08
MX12B	FC/MC35B	0.95	0.98	1.03
MX12B	FC/MC43B	0.95	0.97	1.03

Furnace	Coil	T.C.	S.C.	KW
T*(8,L)X*A12	FC/MC/PC32A	1.00	0.98	1.08
(Y*LC/T*8V/T*LV)*A12	FC/MC/PC32A	1.00	0.98	1.08
(Y*LC/T*8V/T*LV)*B12	FC/MC/PC35B	1.00	1.01	1.08
(Y*LC/T*8V/T*LV)*C16	FC/MC/PC35C	1.00	0.98	1.08
(Y*9C/T*9V)*B12	FC/MC/PC35B	1.00	0.98	1.08
(Y*9C/T*9V)*C16	FC/MC/PC35C	1.00	1.01	1.08
(Y*LC/T*8V/T*LV)*A12	FC/MC/PC37A	1.00	1.00	1.08
(Y*LC/T*8V/T*LV)*B12	FC/MC/PC43B	1.00	0.96	1.08

COOLING PERFORMANCE DATA

CONDENSING UNIT MODEL NO.	THGF24S41S3														
INDOOR COIL MODEL NO.	AHX30														
CONDENSING ENTERING AIR TEMPERATURE	IDCFM	600					800					1000				
	ID DB (°F)	80	80	75	80	80	80	80	75	80	80	80	80	75	80	80
	ID WB (°F)	57	62	62	67	72	57	62	62	67	72	57	62	62	67	72
65	T.C.	21.7	23.6	23.5	25.2	26.6	23.4	24.1	24.3	26.0	27.2	25.1	24.6	25.1	26.9	27.8
	S.C.	21.4	19.4	16.6	16.2	13.7	23.1	21.8	18.5	17.9	14.3	24.8	24.3	20.5	19.5	15.0
	KW	1.20	1.22	1.22	1.23	1.21	1.28	1.29	1.31	1.29	1.28	1.36	1.35	1.39	1.35	1.35
75	T.C.	20.8	22.3	22.2	24.0	25.7	22.4	23.0	23.0	24.8	26.3	24.1	23.8	23.8	25.7	26.9
	S.C.	20.5	18.8	16.0	15.7	13.1	22.1	21.1	18.0	17.5	13.9	23.8	23.5	19.9	19.2	14.6
	KW	1.36	1.37	1.37	1.38	1.39	1.45	1.45	1.45	1.46	1.47	1.53	1.53	1.53	1.53	1.54
85	T.C.	19.8	20.9	20.9	22.9	24.8	21.4	21.9	21.6	23.7	25.5	23.1	22.9	22.4	24.5	26.1
	S.C.	19.5	18.2	15.4	15.3	12.5	21.2	20.4	17.4	17.1	13.4	22.8	22.6	19.4	18.9	14.3
	KW	1.52	1.53	1.53	1.54	1.57	1.61	1.61	1.59	1.62	1.65	1.70	1.70	1.66	1.71	1.73
95	T.C.	18.8	19.5	19.6	21.8	23.9	20.5	20.8	20.3	22.5	24.6	22.1	22.1	21.1	23.2	25.3
	S.C.	18.6	17.5	14.8	14.8	11.9	20.2	19.7	16.8	16.7	12.9	21.8	21.8	18.8	18.7	14.0
	KW	1.67	1.68	1.68	1.69	1.75	1.77	1.78	1.74	1.79	1.83	1.87	1.87	1.79	1.89	1.92
105	T.C.	17.7	18.0	18.0	20.2	22.4	19.2	19.3	18.7	20.9	23.1	20.7	20.7	19.4	21.6	23.7
	S.C.	17.4	16.8	14.1	14.2	11.3	18.9	18.7	16.1	16.1	12.4	20.5	20.5	18.2	18.1	13.5
	KW	1.86	1.87	1.87	1.90	1.96	1.97	1.97	1.94	2.00	2.04	2.07	2.07	2.02	2.09	2.12
115	T.C.	16.5	16.4	16.4	18.7	20.9	17.9	17.9	17.0	19.3	21.6	19.4	19.4	17.7	20.0	22.2
	S.C.	16.3	16.1	13.4	13.5	10.8	17.7	17.6	15.4	15.5	11.9	19.2	19.2	17.5	17.5	13.0
	KW	2.05	2.05	2.05	2.11	2.16	2.16	2.16	2.15	2.21	2.24	2.26	2.26	2.24	2.30	2.32
125	T.C.	15.3	14.8	14.8	17.1	19.4	16.7	16.4	15.4	17.7	20.0	18.1	18.1	16.1	18.3	20.6
	S.C.	15.1	14.8	12.7	12.9	10.2	16.5	16.4	14.7	14.9	11.3	17.8	17.8	16.1	16.9	12.5
	KW	2.25	2.24	2.24	2.33	2.37	2.35	2.35	2.35	2.42	2.45	2.46	2.46	2.46	2.51	2.52

NOTE: ALL CAPACITIES INCLUDE INDOOR FAN HEAT. KW VALUES ARE FOR THE SYSTEM (OUTDOOR + INDOOR).

Multipliers for determining the performance with other indoor sections.

NOTE: For dry bulb temperatures different than those listed (between 73-87 °F), sensible capacity increases by 1060 BTUH per 1000 CFM per degree above the listed temperature and decreases by 1060 BTUH per 1000 CFM per degree below the listed temperature.

Air Handler	Coil	T.C.	S.C.	KW
–	FC/MC/PC35	0.97	0.95	1.09
AHE24B	–	1.01	1.02	1.03
AHE30B	–	1.01	1.02	1.03
AV*36	–	1.00	0.98	1.02
AHX36	–	1.01	1.02	1.03
F6FP030	–	1.00	1.01	1.07
F6FP036	–	1.00	1.02	1.02
MV12B	FC/MC35B	1.00	1.01	1.02
MV12B	FC/MC43B	1.03	1.05	1.05
MX12B	FC/MC35B	1.02	1.02	1.04
MX12B	FC/MC43B	1.01	0.99	1.03

Furnace	Coil	T.C.	S.C.	KW
T*(8,L)X*A12	FC/MC/PC32A	1.01	1.01	1.03
T*(8,L)X*B12	FC/MC/PC35B	1.01	1.04	1.03
T*(8,L)X*C16	FC/MC/PC35C	1.02	1.05	1.04
T*(8,L)X*C20	FC/MC/PC35C	1.02	1.06	1.04
T*9X*B12	FC/MC/PC35B	1.01	1.01	1.03
T*9X*C16	FC/MC/PC35C	1.01	1.01	1.03
T*9X*C20	FC/MC/PC35C	1.01	1.01	1.03

Furnace	Coil	T.C.	S.C.	KW
T*(8,L)X*A12	FC/MC/PC37A	1.03	1.05	1.05
T*(8,L)X*B12	FC/MC/PC43B	1.03	1.06	1.05
T*(8,L)X*C16	FC/MC/PC43C	1.03	1.06	1.05
T*9X*B12	FC/MC/PC43B	1.03	1.05	1.05
T*9X*C16	FC/MC/PC43C	1.02	1.02	1.04
T*9X*C20	FC/MC/PC43C	1.02	1.02	1.04
(Y*LC/T*8V/T*LV)*A12	FC/MC/PC32A	1.00	1.00	1.07
(Y*LC/T*8V/T*LV)*B12	FC/MC/PC35B	0.99	0.98	1.02
(Y*LC/T*8V/T*LV)*C16	FC/MC/PC35C	1.01	1.04	1.03
(Y*LC/T*8V/T*LV)*C20	FC/MC/PC35C	0.99	0.97	1.02
(Y*9C/T*9V)*B12	FC/MC/PC35B	1.00	1.00	1.07
(Y*9C/T*9V)*C16	FC/MC/PC35C	1.02	1.06	1.04
(Y*9C/T*9V)*C20	FC/MC/PC35C	0.99	0.98	1.02
(Y*LC/T*8V/T*LV)*A12	FC/MC/PC37A	1.02	1.05	1.04
(Y*LC/T*8V/T*LV)*B12	FC/MC/PC43B	1.00	0.99	1.02
(Y*LC/T*8V/T*LV)*C16	FC/MC/PC43C	1.03	1.08	1.05
(Y*LC/T*8V/T*LV)*C20	FC/MC/PC43C	1.01	1.00	1.03
(Y*9C/T*9V)*B12	FC/MC/PC43B	1.02	1.05	1.04
(Y*9C/T*9V)*C16	FC/MC/PC43C	1.03	1.05	1.05
(Y*9C/T*9V)*C20	FC/MC/PC43C	1.03	1.08	1.05

COOLING PERFORMANCE DATA																
CONDENSING UNIT MODEL NO.		THGF30S41S3														
INDOOR COIL MODEL NO.		AHX36														
CONDENSING ENTERING AIR TEMPERATURE	IDCFM	800					1000					1200				
	ID DB (°F)	80	80	75	80	80	80	80	75	80	80	80	80	75	80	80
	ID WB (°F)	57	62	62	67	72	57	62	62	67	72	57	62	62	67	72
65	T.C.	28.4	30.2	30.1	33.0	34.3	30.2	31.2	31.2	33.5	34.8	32.0	32.2	32.2	34.0	35.3
	S.C.	28.4	26.3	22.5	22.3	18.2	30.2	29.6	24.6	23.7	18.7	32.0	32.2	26.8	25.1	19.1
	KW	1.49	1.53	1.53	1.55	1.52	1.60	1.63	1.63	1.60	1.59	1.70	1.74	1.74	1.65	1.66
75	T.C.	27.3	28.7	28.7	31.5	33.2	29.0	29.7	29.6	32.1	33.7	30.7	30.6	30.6	32.7	34.2
	S.C.	27.3	25.7	21.8	21.6	17.7	29.0	28.4	23.9	23.2	18.2	30.7	30.6	26.1	24.8	18.7
	KW	1.67	1.69	1.69	1.72	1.70	1.76	1.78	1.78	1.78	1.77	1.86	1.86	1.86	1.84	1.85
85	T.C.	26.2	27.2	27.2	30.0	32.2	27.8	28.1	28.1	30.7	32.6	29.5	29.0	29.0	31.4	33.1
	S.C.	26.2	25.0	21.1	21.0	17.1	27.8	27.3	23.3	22.8	17.7	29.5	29.0	25.4	24.6	18.4
	KW	1.84	1.86	1.86	1.88	1.88	1.93	1.92	1.92	1.95	1.96	2.03	1.99	1.99	2.02	2.03
95	T.C.	25.1	25.8	25.8	28.6	31.1	26.7	26.6	26.6	29.3	31.5	28.2	27.3	27.3	30.1	32.0
	S.C.	25.1	24.4	20.4	20.4	16.5	26.7	26.1	22.6	22.4	17.3	28.2	27.3	24.7	24.4	18.1
	KW	2.01	2.02	2.02	2.05	2.06	2.10	2.07	2.06	2.13	2.14	2.19	2.11	2.11	2.20	2.21
105	T.C.	23.7	23.8	23.9	26.9	29.5	25.2	25.1	24.6	27.6	29.9	26.7	26.3	25.4	28.2	30.3
	S.C.	23.7	23.4	19.6	19.7	15.7	25.2	25.1	21.7	21.7	16.6	26.7	26.3	23.9	23.7	17.5
	KW	2.22	2.23	2.23	2.27	2.30	2.31	2.29	2.29	2.35	2.37	2.40	2.36	2.36	2.43	2.44
115	T.C.	22.2	21.9	21.9	25.2	27.8	23.7	23.6	22.7	25.8	28.3	25.2	25.2	23.4	26.4	28.7
	S.C.	22.2	21.9	18.7	19.0	15.0	23.7	23.6	20.9	21.0	16.0	25.2	25.2	23.1	23.0	17.0
	KW	2.44	2.43	2.43	2.50	2.53	2.52	2.52	2.52	2.57	2.60	2.61	2.61	2.61	2.65	2.67
125	T.C.	20.8	19.9	20.0	23.5	26.2	22.2	22.1	20.7	24.0	26.7	23.7	24.2	21.5	24.5	27.1
	S.C.	20.8	19.9	17.8	18.3	14.2	22.2	22.1	20.1	20.3	15.3	23.7	24.2	21.5	22.3	16.4
	KW	2.65	2.64	2.64	2.72	2.76	2.74	2.75	2.75	2.80	2.83	2.82	2.86	2.85	2.88	2.90
NOTE: ALL CAPACITIES INCLUDE INDOOR FAN HEAT. KW VALUES ARE FOR THE SYSTEM (OUTDOOR + INDOOR).																

Multipliers for determining the performance with other indoor sections.

NOTE: For dry bulb temperatures different than those listed (between 73-87 °F), sensible capacity increases by 1060 BTUH per 1000 CFM per degree above the listed temperature and decreases by 1060 BTUH per 1000 CFM per degree below the listed temperature.

Air Handler	Coil	T.C.	S.C.	KW
–	FC/MC/PC43	0.97	0.97	1.10
AHE36C	–	1.02	0.98	1.12
AV*36	–	0.99	0.98	1.09
F6FP042	–	0.99	0.98	1.09
MV12B	FC/MC43B	0.99	0.97	1.09
MV16C	FC/MC43C	0.99	0.97	1.09
MX12B	FC/MC43B	1.02	1.01	1.12
MX16C	FC/MC43C	1.02	0.97	1.12

Furnace	Coil	T.C.	S.C.	KW
T*(8,L)X*A12	FC/MC/PC37A	1.00	1.04	1.10
T*(8,L)X*B12	FC/MC/PC43B	1.01	1.05	1.11
T*(8,L)X*C16	FC/MC/PC43C	0.99	0.97	1.09
T*9X*B12	FC/MC/PC43B	1.00	1.04	1.10
T*9X*C16	FC/MC/PC43C	1.00	1.02	1.10
(Y*LC/T*8V/T*LV)*A12	FC/MC/PC37A	0.97	0.96	1.11
(Y*LC/T*8V/T*LV)*B12	FC/MC/PC43B	0.98	0.96	1.08
(Y*LC/T*8V/T*LV)*C16	FC/MC/PC43C	0.99	0.97	1.09
(Y*LC/T*8V/T*LV)*C20	FC/MC/PC43C	0.99	0.97	1.09
(Y*9C/T*9V)*B12	FC/MC/PC43B	0.99	0.99	1.13
(Y*9C/T*9V)*C16	FC/MC/PC43C	0.99	1.00	1.09
(Y*9C/T*9V)*C20	FC/MC/PC43C	0.99	0.97	1.09

COOLING PERFORMANCE DATA																
CONDENSING UNIT MODEL NO.		**THGF36S41S3**														
INDOOR COIL MODEL NO.		**AHX36**														
CONDENSING ENTERING AIR TEMPERATURE	IDCFM	1000					1200					1400				
	ID DB (°F)	80	80	75	80	80	80	80	75	80	80	80	80	75	80	80
	ID WB (°F)	57	62	62	67	72	57	62	62	67	72	57	62	62	67	72
65	T.C.	34.5	36.4	37.1	40.1	42.7	36.2	37.6	37.8	41.2	43.4	38.0	38.7	38.5	42.3	44.1
	S.C.	34.5	31.5	27.2	26.8	22.2	36.2	34.9	29.1	28.8	22.9	38.0	38.3	31.0	30.8	23.7
	KW	1.93	1.99	1.99	2.01	2.00	2.04	2.07	2.07	2.08	2.10	2.15	2.15	2.15	2.16	2.19
75	T.C.	33.0	34.5	34.9	38.1	41.1	34.7	35.6	35.7	39.2	41.7	36.4	36.6	36.5	40.2	42.4
	S.C.	33.0	30.7	26.2	26.0	21.3	34.7	33.6	28.2	28.0	22.2	36.4	36.5	30.2	30.0	23.0
	KW	2.19	2.23	2.23	2.26	2.28	2.29	2.31	2.31	2.34	2.36	2.39	2.39	2.39	2.42	2.44
85	T.C.	31.5	32.6	32.8	36.2	39.4	33.2	33.6	33.6	37.1	40.0	34.9	34.5	34.4	38.1	40.6
	S.C.	31.5	29.9	25.3	25.2	20.4	33.2	32.3	27.3	27.2	21.4	34.9	34.5	29.3	29.1	22.3
	KW	2.45	2.47	2.48	2.51	2.56	2.54	2.55	2.56	2.60	2.63	2.64	2.64	2.64	2.68	2.69
95	T.C.	29.9	30.7	30.6	34.3	37.8	31.6	31.6	31.5	35.1	38.3	33.3	32.4	32.4	36.0	38.9
	S.C.	29.9	29.1	24.3	24.4	19.6	31.6	31.0	26.4	26.3	20.6	33.3	32.4	28.5	28.3	21.6
	KW	2.71	2.71	2.73	2.76	2.84	2.79	2.80	2.80	2.85	2.89	2.88	2.88	2.88	2.95	2.95
105	T.C.	28.2	28.1	28.0	31.8	35.3	29.8	29.4	28.9	32.6	35.9	31.4	30.8	29.7	33.4	36.6
	S.C.	28.2	27.5	23.1	23.4	18.7	29.8	29.4	25.2	25.4	19.7	31.4	30.8	27.4	27.3	20.7
	KW	2.98	2.99	3.00	3.04	3.09	3.08	3.08	3.08	3.12	3.16	3.17	3.17	3.16	3.21	3.24
115	T.C.	26.5	25.5	25.3	29.4	32.7	28.0	27.3	26.2	30.1	33.5	29.5	29.2	27.1	30.9	34.2
	S.C.	26.5	25.5	21.9	22.4	17.8	28.0	27.3	24.1	24.4	18.8	29.5	29.2	26.2	26.3	19.8
	KW	3.26	3.26	3.27	3.32	3.33	3.36	3.36	3.36	3.39	3.44	3.46	3.45	3.44	3.47	3.54
125	T.C.	24.7	22.9	22.6	27.0	30.2	26.2	25.2	23.6	27.7	31.0	27.6	27.6	24.5	28.3	31.9
	S.C.	24.7	22.9	20.7	21.4	16.8	26.2	25.2	22.9	23.4	17.9	27.6	27.6	24.5	25.3	19.0
	KW	3.53	3.54	3.54	3.59	3.58	3.64	3.64	3.63	3.66	3.71	3.75	3.74	3.72	3.74	3.83
NOTE: ALL CAPACITIES INCLUDE INDOOR FAN HEAT. KW VALUES ARE FOR THE SYSTEM (OUTDOOR + INDOOR).																

Multipliers for determining the performance with other indoor sections.

NOTE: For dry bulb temperatures different than those listed (between 73-87 °F), sensible capacity increases by 1060 BTUH per 1000 CFM per degree above the listed temperature and decreases by 1060 BTUH per 1000 CFM per degree below the listed temperature.

Air Handler	Coil	T.C.	S.C.	KW
–	FC/MC/PC48	0.99	0.98	1.08
AHE36C	–	0.99	0.98	1.05
AHE42D	–	1.01	0.99	1.02
AHE48D	–	1.01	1.00	0.99
AV*36	–	1.00	0.99	1.06
AV*48	–	1.01	1.00	0.99
AHX42	–	1.01	1.01	1.03
AHX48	–	1.01	1.00	0.99
F6FP042	–	1.02	1.04	1.03
MV12B	FC/MC43B	1.00	1.00	1.06
MV16C	FC/MC43C	0.99	0.99	1.05
MV12D	FC/MC48D	1.02	1.01	1.08
MX12B	FC/MC43B	0.99	0.98	1.05
MX16C	FC/MC43C	1.01	1.00	1.02
MX12D	FC/MC48D	1.02	1.01	1.08
MX16C	FC/MC48C	1.01	0.98	1.02

Furnace	Coil	T.C.	S.C.	KW
T*(8,L)X*A12	FC/MC/PC37A	1.01	1.03	1.07
T*(8,L)X*B12	FC/MC/PC43B	1.01	1.03	1.07
T*(8,L)X*C16	FC/MC/PC43C	1.00	0.99	1.02
T*(8,L)X*C20	FC/MC/PC43C	1.02	1.03	1.03
T*9X*B12	FC/MC/PC43B	1.01	1.03	1.07
T*9X*C16	FC/MC/PC43C	1.02	1.03	1.08
T*9X*C20	FC/MC/PC43C	0.99	0.99	1.05
(Y*LC/T*8V/T*LV)*C16	FC/MC/PC43C	0.99	0.99	1.02
(Y*LC/T*8V/T*LV)*C20	FC/MC/PC43C	0.99	0.99	1.05
(Y*9C/T*9V)*C16	FC/MC/PC43C	1.01	1.02	1.06
(Y*9C/T*9V)*C20	FC/MC/PC43C	0.99	0.99	1.05

COOLING PERFORMANCE DATA

CONDENSING UNIT MODEL NO.	THGF42S41S3															
INDOOR COIL MODEL NO.	AHX60															
CONDENSING ENTERING AIR TEMPERATURE	IDCFM	1155					1355					1555				
	ID DB (°F)	80	80	75	80	80	80	80	75	80	80	80	80	75	80	80
	ID WB (°F)	57	62	62	67	72	57	62	62	67	72	57	62	62	67	72
65	T.C.	38.5	40.6	41.2	44.8	48.2	40.3	41.9	41.0	45.8	49.3	42.2	43.3	40.7	46.7	50.4
	S.C.	38.5	35.5	30.5	30.2	24.7	40.3	39.2	32.0	32.1	25.8	42.2	42.9	33.6	33.9	26.8
	KW	2.20	2.21	2.21	2.23	2.36	2.27	2.28	2.28	2.35	2.44	2.34	2.35	2.34	2.47	2.52
75	T.C.	36.9	38.6	39.0	42.8	46.3	38.7	39.7	39.1	43.7	47.3	40.6	40.8	39.2	44.6	48.3
	S.C.	36.9	34.8	29.6	29.4	23.8	38.7	37.7	31.3	31.3	24.9	40.6	40.6	33.0	33.2	26.0
	KW	2.48	2.49	2.49	2.53	2.62	2.57	2.57	2.57	2.64	2.71	2.65	2.65	2.64	2.74	2.80
85	T.C.	35.3	36.7	36.9	40.8	44.3	37.2	37.5	37.2	41.6	45.3	39.0	38.3	37.6	42.4	46.2
	S.C.	35.3	34.0	28.6	28.6	23.0	37.2	36.2	30.5	30.5	24.1	39.0	38.3	32.5	32.4	25.1
	KW	2.76	2.78	2.78	2.84	2.88	2.86	2.86	2.86	2.92	2.98	2.96	2.95	2.94	3.01	3.08
95	T.C.	33.7	34.8	34.7	38.8	42.3	35.6	35.3	35.4	39.6	43.2	37.4	35.8	36.1	40.3	44.1
	S.C.	33.7	33.3	27.7	27.7	22.2	35.6	34.7	29.8	29.7	23.2	37.4	35.8	31.9	31.6	24.3
	KW	3.04	3.06	3.06	3.14	3.14	3.15	3.16	3.15	3.21	3.25	3.26	3.25	3.24	3.29	3.36
105	T.C.	31.7	32.2	31.4	35.9	39.8	33.4	33.3	32.3	36.7	40.5	35.1	34.3	33.1	37.5	41.3
	S.C.	31.7	31.6	26.3	26.6	21.1	33.4	33.1	28.5	28.6	22.2	35.1	34.3	30.7	30.6	23.3
	KW	3.35	3.36	3.37	3.40	3.47	3.46	3.46	3.46	3.50	3.57	3.58	3.55	3.54	3.60	3.67
115	T.C.	29.7	29.7	28.2	33.0	37.2	31.2	31.2	29.2	33.8	37.8	32.7	32.7	30.2	34.7	38.5
	S.C.	29.7	29.7	24.9	25.4	20.1	31.2	31.2	27.2	27.5	21.2	32.7	32.7	29.5	29.6	22.3
	KW	3.66	3.67	3.69	3.66	3.80	3.78	3.75	3.76	3.79	3.89	3.89	3.84	3.83	3.92	3.98
125	T.C.	27.6	27.1	25.0	30.1	34.6	29.0	29.2	26.1	31.0	35.1	30.4	31.2	27.2	31.9	35.6
	S.C.	27.6	27.1	23.6	24.3	19.1	29.0	29.2	25.9	26.4	20.2	30.4	31.2	27.2	28.6	21.4
	KW	3.97	3.97	4.01	3.92	4.13	4.09	4.05	4.07	4.08	4.21	4.21	4.13	4.13	4.23	4.29

NOTE: ALL CAPACITIES INCLUDE INDOOR FAN HEAT. KW VALUES ARE FOR THE SYSTEM (OUTDOOR + INDOOR).

Multipliers for determining the performance with other indoor sections.

NOTE: For dry bulb temperatures different than those listed (between 73-87 °F), sensible capacity increases by 1060 BTUH per 1000 CFM per degree above the listed temperature and decreases by 1060 BTUH per 1000 CFM per degree below the listed temperature.

Air Handler	Coil	T.C.	S.C.	KW
–	FC/MC/PC48	0.98	0.95	1.06
–	FC/MC/PC60	0.98	0.95	1.06
–	FC/MC62	0.98	0.96	1.06
AHE42D	–	1.00	0.97	0.99
AHE48D	–	1.00	0.96	0.99
AHE60D	–	0.99	0.99	0.99
F6FP060	–	1.00	1.00	1.00
MV16C	FC/MC48C	1.00	0.96	1.01
MV20D	FC/MC48D	1.01	0.99	1.00
MV16C	FC/MC60C	1.00	0.97	1.01
MV20D	FC/MC60D	1.00	0.97	1.00
MV20D	FC/MC62D	1.00	1.00	1.00
MX16C	FC/MC48C	1.00	0.97	0.98
MX20D	FC/MC48D	1.00	0.97	0.99
MX16C	FC/MC60C	1.00	0.97	0.99
MX20D	FC/MC60D	1.01	1.01	0.98
MX20D	FC/MC62D	1.00	1.02	1.00

Furnace	Coil	T.C.	S.C.	KW
T*(8,L)X*C16	FC/MC/PC48C	1.00	0.97	0.99
T*(8,L)X*C20	FC/MC/PC48C	1.01	1.00	1.00
T*9X*C16	FC/MC/PC48C	1.00	0.96	1.01
T*9X*C20	FC/MC/PC48C	1.00	0.96	1.00
T*9X*D20	FC/MC/PC48D	1.00	0.96	1.00
T*(8,L)X*C16	FC/PC60C	1.00	0.97	0.99

Furnace	Coil	T.C.	S.C.	KW
T*(8,L)X*C20	FC/PC60C	1.01	1.01	1.00
T*9X*C16	FC/PC60C	1.00	0.97	1.01
T*9X*C20	FC/PC60C	1.00	0.97	1.00
T*9X*D20	FC/MC/PC60D	1.02	1.02	0.99
T*(8,L)X*C16	FC/MC62D	1.01	1.00	1.02
T*(8,L)X*C20	FC/MC62D	1.01	1.03	1.02
T*9X*C16	FC/MC62D	1.00	0.99	1.05
T*9X*C20	FC/MC62D	1.00	1.00	1.00
T*9X*D20	FC/MC62D	1.00	1.00	1.00
Y*(8,L)C*C16	FC/MC/PC48C	0.98	0.94	1.02
Y*(8,L)C*C20	FC/MC/PC48C	0.99	0.96	1.02
Y*9C*C16	FC/MC/PC48C	0.99	0.95	1.03
Y*9C*C20	FC/MC/PC48C	0.99	0.95	1.04
Y*9C*D20	FC/MC/PC48D	0.99	0.96	1.03
Y*(8,L)C*C16	FC/PC60C	0.99	0.96	1.02
Y*(8,L)C*C20	FC/PC60C	1.00	0.97	1.01
Y*9C*C16	FC/PC60C	0.99	0.96	1.05
Y*9C*C20	FC/PC60C	0.99	0.96	1.03
Y*9C*D20	FC/MC/PC60D	0.99	0.96	1.02
(Y*LC/T*8V/T*LV)*C16	FC/MC62D	1.00	0.99	1.05
(Y*LC/T*8V/T*LV)*C20	FC/MC62D	1.00	1.00	1.00
(Y*9C/T*9V)*C16	FC/MC62D	0.99	0.99	1.08
(Y*9C/T*9V)*C20	FC/MC62D	1.00	0.99	1.05
(Y*9C/T*9V)*D20	FC/MC62D	1.00	0.99	1.05

COOLING PERFORMANCE DATA																
CONDENSING UNIT MODEL NO.		**THGF48S41S3**														
INDOOR COIL MODEL NO.		**F6FP060**														
CONDENSING ENTERING AIR TEMPERATURE	IDCFM	1400					1600					1800				
	ID DB (°F)	80	80	75	80	80	80	80	75	80	80	80	80	75	80	80
	ID WB (°F)	57	62	62	67	72	57	62	62	67	72	57	62	62	67	72
65	T.C.	46.3	48.5	48.5	53.1	57.3	48.0	50.1	49.9	53.5	58.0	49.8	51.6	51.4	53.9	58.7
	S.C.	46.3	42.2	35.8	35.4	29.2	48.0	45.7	38.1	36.7	29.9	49.8	49.3	40.4	38.0	30.6
	KW	2.67	2.73	2.72	2.76	2.74	2.77	2.80	2.80	2.81	2.80	2.87	2.87	2.87	2.86	2.87
75	T.C.	44.4	46.1	46.1	50.7	55.0	46.2	47.4	47.3	51.3	55.8	48.0	48.7	48.5	51.8	56.5
	S.C.	44.4	41.2	34.8	34.4	28.2	46.2	44.2	37.0	36.0	29.0	48.0	47.1	39.2	37.5	29.8
	KW	3.00	3.04	3.04	3.05	3.09	3.10	3.12	3.12	3.13	3.16	3.20	3.20	3.20	3.21	3.23
85	T.C.	42.4	43.6	43.6	48.3	52.7	44.3	44.7	44.7	49.0	53.5	46.2	45.7	45.7	49.8	54.3
	S.C.	42.4	40.2	33.7	33.5	27.1	44.3	42.6	35.8	35.3	28.0	46.2	45.0	38.0	37.0	29.0
	KW	3.33	3.35	3.35	3.34	3.44	3.43	3.44	3.44	3.45	3.52	3.54	3.53	3.53	3.56	3.60
95	T.C.	40.5	41.1	41.2	45.9	50.5	42.5	42.0	42.0	46.8	51.3	44.4	42.8	42.8	47.7	52.1
	S.C.	40.5	39.2	32.7	32.6	26.0	42.5	41.0	34.7	34.6	27.1	44.4	42.8	36.8	36.5	28.2
	KW	3.66	3.66	3.66	3.63	3.80	3.76	3.76	3.76	3.77	3.88	3.87	3.86	3.86	3.91	3.97
105	T.C.	37.9	38.3	37.6	42.7	47.5	39.7	39.5	38.5	43.5	48.2	41.5	40.7	39.3	44.3	48.8
	S.C.	37.9	37.4	31.1	31.4	24.8	39.7	39.1	33.2	33.3	25.9	41.5	40.7	35.3	35.3	26.9
	KW	4.05	4.05	4.04	4.10	4.22	4.17	4.17	4.13	4.21	4.30	4.29	4.28	4.23	4.33	4.38
115	T.C.	35.2	35.5	34.0	39.5	44.6	36.9	37.1	34.9	40.2	45.1	38.7	38.7	35.8	41.0	45.5
	S.C.	35.2	35.5	29.6	30.1	23.6	36.9	37.1	31.7	32.1	24.7	38.7	38.7	33.9	34.1	25.7
	KW	4.44	4.44	4.42	4.57	4.64	4.57	4.58	4.51	4.66	4.71	4.70	4.71	4.60	4.75	4.78
125	T.C.	32.6	32.7	30.4	36.3	41.7	34.2	34.7	31.3	37.0	42.0	35.8	36.6	32.2	37.7	42.3
	S.C.	32.6	32.7	28.0	28.8	22.4	34.2	34.7	30.2	30.9	23.5	35.8	36.6	32.2	32.9	24.5
	KW	4.83	4.83	4.80	5.05	5.06	4.98	4.98	4.88	5.11	5.12	5.12	5.14	4.97	5.17	5.19
NOTE: ALL CAPACITIES INCLUDE INDOOR FAN HEAT. KW VALUES ARE FOR THE SYSTEM (OUTDOOR + INDOOR).																

Multipliers for determining the performance with other indoor sections.

NOTE: For dry bulb temperatures different than those listed (between 73-87 °F), sensible capacity increases by 1060 BTUH per 1000 CFM per degree above the listed temperature and decreases by 1060 BTUH per 1000 CFM per degree below the listed temperature.

Air Handler	Coil	T.C.	S.C.	KW
–	FC/MC62	0.99	0.98	1.07
–	FC64	1.02	1.05	1.02
AHE60D	–	0.98	0.98	1.03
AHX60	–	1.00	0.99	1.04
MV20D	FC/MC62D	1.00	1.01	1.04
MV20D	FC64D	1.02	1.05	0.97
MX20D	FC/MC62D	0.98	0.98	1.03
MX20D	FC64D	0.98	0.99	1.03

Furnace	Coil	T.C.	S.C.	KW
T*(8,L)X*C16	FC/MC62D	1.00	1.01	1.08
T*(8,L)X*C20	FC/MC62D	1.00	1.01	1.08
T*9X*C16	FC/MC62D	1.00	1.00	1.08
T*9X*C20	FC/MC62D	1.00	1.01	1.08
T*9X*D20	FC/MC62D	1.00	1.00	1.08
T*(8,L)X*C16	FC64D	1.02	1.05	0.99
T*(8,L)X*C20	FC64D	1.02	1.05	0.98
T*9X*C16	FC64D	1.02	1.05	0.99
T*9X*C20	FC64D	1.02	1.05	0.98
T*9X*D20	FC64D	1.02	1.05	0.99
(Y*LC/T*8V/T*LV)*C16	FC/MC62D	1.00	1.00	1.08
(Y*LC/T*8V/T*LV)*C20	FC/MC62D	1.00	1.00	1.08
(Y*9C/T*9V)*C16	FC/MC62D	0.99	1.00	1.07
(Y*9C/T*9V)*C20	FC/MC62D	0.99	0.99	1.07
(Y*9C/T*9V)*D20	FC/MC62D	0.99	0.99	1.07
(Y*LC/T*8V/T*LV)*C16	FC64D	1.02	1.05	0.99
(Y*LC/T*8V/T*LV)*C20	FC64D	1.02	1.05	0.99
(Y*9C/T*9V)*C16	FC64D	1.02	1.05	1.00
(Y*9C/T*9V)*C20	FC64D	1.02	1.05	1.02
(Y*9C/T*9V)*D20	FC64D	1.02	1.05	1.01

COOLING PERFORMANCE DATA - LOW CFM 1-STAGE OPERATION																
CONDENSING UNIT MODEL NO.		**THGF60S41S3**														
INDOOR COIL MODEL NO.		**AHX60**														
CONDENSING ENTERING AIR TEMPERATURE	IDCFM	965					1165					1365				
	ID DB (°F)	80	80	75	80	80	80	80	75	80	80	80	80	75	80	80
	ID WB (°F)	57	62	62	67	72	57	62	62	67	72	57	62	62	67	72
65	T.C.	37.3	41.8	41.6	45.5	50.9	40.4	43.7	43.3	47.7	52.2	43.5	45.6	45.1	49.9	53.6
	S.C.	35.2	32.0	27.8	27.8	23.7	38.1	35.1	30.0	30.0	24.9	41.1	38.2	32.2	32.3	26.1
	KW	2.13	2.13	2.13	2.12	2.13	2.19	2.19	2.19	2.19	2.19	2.25	2.26	2.25	2.26	2.25
75	T.C.	36.2	39.9	39.8	43.6	48.4	39.0	41.6	41.3	45.5	49.8	41.8	43.3	42.8	47.4	51.2
	S.C.	34.2	31.2	27.0	27.0	22.7	36.8	34.3	29.1	29.1	23.9	39.5	37.3	31.3	31.3	25.1
	KW	2.44	2.44	2.44	2.43	2.44	2.50	2.50	2.50	2.51	2.51	2.57	2.57	2.57	2.58	2.58
85	T.C.	35.2	38.0	37.9	41.8	46.0	37.6	39.4	39.2	43.3	47.4	40.1	40.9	40.5	44.8	48.8
	S.C.	33.2	30.5	26.1	26.1	21.7	35.5	33.5	28.3	28.3	22.9	37.8	36.5	30.4	30.4	24.0
	KW	2.75	2.75	2.75	2.75	2.76	2.82	2.81	2.82	2.82	2.83	2.88	2.88	2.88	2.89	2.90
95	T.C.	34.1	36.0	36.0	39.9	43.6	36.2	37.3	37.1	41.1	45.0	38.3	38.5	38.2	42.3	46.5
	S.C.	32.2	29.7	25.3	25.3	20.7	34.2	32.7	27.4	27.4	21.9	36.2	35.7	29.5	29.4	23.0
	KW	3.06	3.06	3.06	3.06	3.07	3.13	3.13	3.13	3.13	3.14	3.20	3.19	3.20	3.21	3.22
105	T.C.	32.4	33.7	33.7	37.3	40.9	34.2	34.7	34.6	38.3	42.1	36.1	35.7	35.5	39.3	43.3
	S.C.	30.6	28.8	24.3	24.3	19.6	32.3	31.1	26.4	26.3	20.8	34.1	33.3	28.5	28.4	22.0
	KW	3.46	3.47	3.47	3.46	3.47	3.53	3.53	3.53	3.53	3.55	3.60	3.59	3.60	3.60	3.62
115	T.C.	30.6	31.4	31.4	34.7	38.3	32.3	32.1	32.1	35.5	39.2	33.9	32.8	32.8	36.3	40.1
	S.C.	28.9	27.8	23.3	23.2	18.6	30.5	29.4	25.4	25.3	19.7	32.0	31.0	27.4	27.3	20.9
	KW	3.87	3.88	3.88	3.87	3.88	3.94	3.94	3.93	3.93	3.95	4.00	4.00	3.99	4.00	4.02
125	T.C.	28.9	29.1	29.1	32.1	35.7	30.3	29.5	29.6	32.7	36.3	31.7	29.9	30.1	33.4	37.0
	S.C.	27.3	26.9	22.4	22.2	17.5	28.6	27.8	24.4	24.2	18.7	30.0	28.6	26.4	26.3	19.9
	KW	4.28	4.29	4.28	4.27	4.28	4.34	4.34	4.34	4.33	4.35	4.40	4.40	4.39	4.40	4.42
NOTE: ALL CAPACITIES INCLUDE INDOOR FAN HEAT. KW VALUES ARE FOR THE SYSTEM (OUTDOOR + INDOOR).																

Multipliers for determining the performance with other indoor sections.

NOTE: For dry bulb temperatures different than those listed (between 73-87 °F), sensible capacity increases by 1060 BTUH per 1000 CFM per degree above the listed temperature and decreases by 1060 BTUH per 1000 CFM per degree below the listed temperature.

LOW CFM

Air Handler	Coil	T.C.	S.C.	KW
–	FC/MC62	1.00	1.01	1.13
AHE60D	–	0.99	0.99	0.99
MV20D	FC/MC62D	1.00	1.00	0.99
MV20D	FC64D	1.05	1.05	0.97
MX20D	FC/MC62D	1.03	1.07	1.03
MX20D	FC64D	1.06	1.12	1.03

Furnace	Coil	T.C.	S.C.	KW
T*(8,L)X*C20	FC/MC62D	0.92	0.87	0.97
T*9X*C20	FC/MC62D	1.01	1.02	1.02
T*9X*D20	FC/MC62D	1.02	1.03	1.01
T*(8,L)X*C20	FC64D	0.97	0.91	0.95
T*9X*C20	FC64D	1.06	1.07	1.00
T*9X*D20	FC64D	1.06	1.07	0.99
(Y*LC/T*8V/T*LV)*C20	FC/MC62D	0.97	0.94	0.99
(Y*9C/T*9V)*C20	FC/MC62D	0.97	0.95	1.00
(Y*9C/T*9V)*D20	FC/MC62D	0.98	0.96	1.01
(Y*LC/T*8V/T*LV)*C20	FC64D	1.02	0.99	0.98
(Y*9C/T*9V)*C20	FC64D	1.02	1.00	0.99
(Y*9C/T*9V)*D20	FC64D	1.03	1.01	0.99

COOLING PERFORMANCE DATA - HIGH CFM 2-STAGE OPERATION																
CONDENSING UNIT MODEL NO.		**THGF60S41S3**														
INDOOR COIL MODEL NO.		**AHX60**														
CONDENSING ENTERING AIR TEMPERATURE	IDCFM	1650					1850					2050				
	ID DB (°F)	80	80	75	80	80	80	80	75	80	80	80	80	75	80	80
	ID WB (°F)	57	62	62	67	72	57	62	62	67	72	57	62	62	67	72
65	T.C.	56.5	60.0	59.6	65.6	70.6	58.5	61.2	60.8	66.7	72.5	60.5	62.3	62.0	67.8	74.4
	S.C.	55.7	50.3	42.9	42.5	34.9	57.7	53.1	44.9	44.5	36.0	59.6	55.9	47.0	46.5	37.1
	KW	3.43	3.47	3.46	3.53	3.61	3.52	3.56	3.55	3.62	3.70	3.61	3.64	3.64	3.71	3.80
75	T.C.	54.4	57.2	56.8	62.6	67.6	56.3	58.2	57.9	63.6	69.1	58.1	59.2	59.0	64.6	70.6
	S.C.	53.6	49.1	41.6	41.3	33.5	55.4	51.9	43.7	43.2	34.6	57.3	54.7	45.7	45.2	35.7
	KW	3.81	3.85	3.85	3.92	4.00	3.91	3.94	3.93	4.01	4.09	4.00	4.02	4.02	4.09	4.19
85	T.C.	52.3	54.4	54.0	59.6	64.6	54.0	55.2	55.0	60.5	65.8	55.7	56.1	56.0	61.3	66.9
	S.C.	51.5	48.0	40.3	40.1	32.2	53.2	50.7	42.4	42.0	33.2	54.9	53.4	44.4	43.9	34.3
	KW	4.20	4.23	4.23	4.31	4.39	4.30	4.32	4.32	4.39	4.48	4.40	4.40	4.40	4.48	4.57
95	T.C.	50.2	51.6	51.2	56.5	61.7	51.8	52.3	52.1	57.3	62.4	53.3	52.9	53.0	58.1	63.2
	S.C.	49.5	46.8	39.1	38.9	30.8	51.0	49.5	41.1	40.8	31.8	52.5	52.1	43.1	42.6	32.9
	KW	4.59	4.62	4.62	4.70	4.78	4.69	4.70	4.70	4.78	4.87	4.79	4.78	4.79	4.87	4.96
105	T.C.	47.5	48.0	47.8	52.6	57.5	48.8	49.0	48.4	53.3	58.1	50.2	50.0	49.1	54.0	58.8
	S.C.	46.8	45.2	37.6	37.4	29.2	48.1	47.3	39.6	39.2	30.2	49.5	49.3	41.5	41.1	31.3
	KW	5.11	5.12	5.12	5.20	5.28	5.21	5.21	5.20	5.28	5.37	5.30	5.30	5.28	5.36	5.46
115	T.C.	44.7	44.4	44.4	48.7	53.3	45.9	45.7	44.8	49.3	53.9	47.1	47.1	45.2	49.8	54.4
	S.C.	44.1	43.7	36.1	35.8	27.6	45.2	45.0	38.0	37.7	28.6	46.4	46.4	39.9	39.5	29.7
	KW	5.63	5.62	5.62	5.70	5.79	5.72	5.72	5.70	5.78	5.88	5.82	5.82	5.78	5.86	5.96
125	T.C.	42.0	40.7	41.0	44.8	49.2	43.0	42.5	41.1	45.3	49.6	44.0	44.2	41.3	45.7	50.0
	S.C.	41.4	40.7	34.6	34.3	26.0	42.3	42.5	36.5	36.2	27.0	43.3	43.5	38.4	38.0	28.1
	KW	6.15	6.12	6.12	6.20	6.29	6.24	6.23	6.20	6.28	6.38	6.34	6.34	6.27	6.36	6.47
NOTE: ALL CAPACITIES INCLUDE INDOOR FAN HEAT. KW VALUES ARE FOR THE SYSTEM (OUTDOOR + INDOOR).																

Multipliers for determining the performance with other indoor sections.

NOTE: For dry bulb temperatures different than those listed (between 73-87 °F), sensible capacity increases by 1060 BTUH per 1000 CFM per degree above the listed temperature and decreases by 1060 BTUH per 1000 CFM per degree below the listed temperature.

HIGH CFM

Air Handler	Coil	T.C.	S.C.	KW
–	FC/MC62	0.97	0.95	1.02
AHE60D	–	1.00	1.00	1.00
MV20D	FC/MC62D	1.03	1.01	0.96
MV20D	FC64D	1.03	1.03	1.00
MX20D	FC/MC62D	1.01	1.00	0.98
MX20D	FC64D	1.02	1.02	0.99

Furnace	Coil	T.C.	S.C.	KW
T*(8,L)X*C20	FC/MC62D	1.02	0.97	0.93
T*9X*C20	FC/MC62D	1.01	0.95	0.93
T*9X*D20	FC/MC62D	1.02	0.97	0.93
T*(8,L)X*C20	FC64D	1.02	0.99	0.96
T*9X*C20	FC64D	1.01	0.96	0.96
T*9X*D20	FC64D	1.02	0.98	0.97
(Y*LC/T*8V/T*LV)*C20	FC/MC62D	1.01	0.96	0.93
(Y*9C/T*9V)*C20	FC/MC62D	1.01	0.96	0.96
(Y*9C/T*9V)*D20	FC/MC62D	1.01	0.96	0.95
(Y*LC/T*8V/T*LV)*C20	FC64D	1.01	0.97	0.97
(Y*9C/T*9V)*C20	FC64D	1.01	0.97	0.99
(Y*9C/T*9V)*D20	FC64D	1.01	0.97	0.98

HEATING PERFORMANCE DATA										
CONDENSING UNIT MODEL NO		THGF18S41S3								
EVAPORATOR COIL MODEL NO		AHX30								
AIR TEMP. ENTERING OUTDOOR UNIT	AIR TEMP. ENTERING INDOOR COIL	ID CFM								
		450			600			750		
		MBH	COP	KW	MBH	COP	KW	MBH	COP	KW
60	60	20.9	4.6	1.34	22.0	5.0	1.30	23.0	5.4	1.25
	70	20.3	4.0	1.48	21.3	4.3	1.44	22.3	4.7	1.39
	80	19.7	3.5	1.63	20.7	3.8	1.58	21.6	4.2	1.52
47	60	18.4	4.2	1.29	18.9	4.4	1.27	19.5	4.6	1.24
	70	17.5	3.6	1.43	18.1	3.9	1.37	18.8	4.2	1.31
	80	16.6	3.1	1.57	17.3	3.3	1.54	18.0	3.5	1.50
40	60	16.4	3.8	1.27	17.0	4.0	1.25	17.5	4.2	1.23
	70	15.9	3.3	1.40	16.5	3.5	1.38	17.1	3.7	1.36
	80	15.4	3.0	1.53	16.0	3.1	1.51	16.6	3.3	1.48
30	60	14.4	3.4	1.23	14.8	3.5	1.23	15.2	3.6	1.22
	70	13.9	3.0	1.36	14.3	3.1	1.35	14.6	3.2	1.34
	80	13.5	2.7	1.49	13.8	2.7	1.48	14.1	2.8	1.47
17	60	11.4	2.8	1.18	11.7	2.9	1.19	11.9	2.9	1.20
	70	10.6	2.4	1.29	10.9	2.5	1.27	11.2	2.6	1.24
	80	10.2	2.1	1.42	10.5	2.2	1.39	10.8	2.3	1.35
10	60	9.5	2.5	1.13	9.6	2.5	1.12	9.7	2.6	1.11
	70	9.1	2.1	1.26	9.3	2.2	1.24	9.5	2.3	1.22
	80	8.6	1.8	1.39	8.9	1.9	1.37	9.3	2.0	1.34
NOTE: ALL CAPACITIES ARE NET, WITH INDOOR FAN HEAT ALREADY DEDUCTED. KW VALUES ARE FOR THE SYSTEM (OUTDOOR + INDOOR).										

Multipliers for determining the performance with other indoor sections.

Air Handler	Coil	MBH	COP	KW
–	FC/MC/PC35	1.02	0.89	1.14
AHE24B	–	0.99	1.01	0.98
AHE30B	–	0.99	1.00	0.99
AV*36	–	1.00	0.97	1.03
F6FP030	–	1.00	1.00	1.00
MV12B	FC/MC35B	1.00	1.03	0.97
MV12B	FC/MC43B	1.00	0.99	1.01
MX12B	FC/MC35B	0.99	0.97	1.02
MX12B	FC/MC43B	0.99	0.97	1.02

Furnace	Coil	MBH	COP	KW
T*(8,L)X*A12	FC/MC/PC32A	0.99	1.00	0.99
(Y*LC/T*8V/T*LV)*A12	FC/MC/PC32A	1.00	1.03	0.97
(Y*LC/T*8V/T*LV)*B12	FC/MC/PC35B	1.00	1.01	0.99
(Y*LC/T*8V/T*LV)*C16	FC/MC/PC35C	1.00	1.02	0.98
(Y*9C/T*9V)*B12	FC/MC/PC35B	1.00	1.02	0.98
(Y*9C/T*9V)*C16	FC/MC/PC35C	1.00	1.01	0.99
(Y*LC/T*8V/T*LV)*A12	FC/MC/PC37A	1.00	0.99	1.01
(Y*LC/T*8V/T*LV)*B12	FC/MC/PC43B	1.00	1.02	0.98

HEATING PERFORMANCE DATA										
CONDENSING UNIT MODEL NO		**THGF24S41S3**								
EVAPORATOR COIL MODEL NO		**AHX30**								
AIR TEMP. ENTERING OUTDOOR UNIT	**AIR TEMP. ENTERING INDOOR COIL**	ID CFM								
		600			800			1000		
		MBH	COP	KW	MBH	COP	KW	MBH	COP	KW
60	60	25.7	4.3	1.74	26.5	4.5	1.72	27.2	4.7	1.70
	70	24.0	3.7	1.91	25.1	3.9	1.89	26.1	4.1	1.87
	80	22.3	3.1	2.08	23.6	3.4	2.06	25.0	3.6	2.04
47	60	23.7	4.1	1.68	23.9	4.2	1.67	24.2	4.3	1.66
	70	21.7	3.5	1.84	22.2	3.7	1.78	22.7	3.9	1.72
	80	19.8	2.9	2.00	20.5	3.0	1.99	21.2	3.1	1.98
40	60	19.8	3.6	1.61	20.6	3.7	1.62	21.3	3.8	1.63
	70	18.6	3.1	1.78	19.4	3.2	1.79	20.2	3.3	1.79
	80	17.3	2.6	1.95	18.2	2.7	1.95	19.1	2.9	1.95
30	60	17.7	3.3	1.57	17.9	3.3	1.59	18.0	3.3	1.62
	70	16.6	2.8	1.72	16.9	2.8	1.74	17.2	2.9	1.77
	80	15.4	2.4	1.88	15.9	2.5	1.90	16.4	2.5	1.92
17	60	14.6	2.9	1.50	15.0	2.9	1.54	15.3	2.8	1.58
	70	13.0	2.3	1.66	13.7	2.4	1.66	14.4	2.5	1.66
	80	10.6	1.7	1.80	11.6	1.9	1.80	12.6	2.1	1.80
10	60	13.5	2.7	1.48	13.7	2.7	1.49	13.9	2.7	1.50
	70	12.1	2.2	1.64	12.4	2.2	1.64	12.7	2.3	1.64
	80	10.7	1.8	1.78	11.1	1.8	1.79	11.4	1.9	1.79
NOTE: ALL CAPACITIES ARE NET, WITH INDOOR FAN HEAT ALREADY DEDUCTED. KW VALUES ARE FOR THE SYSTEM (OUTDOOR + INDOOR).										

Multipliers for determining the performance with other indoor sections.

Air Handler	Coil	MBH	COP	KW
–	FC/MC/PC35	1.02	0.92	1.11
AHE24B	–	1.00	0.99	1.01
AHE30B	–	1.00	0.99	1.01
AV*36	–	0.99	0.97	1.02
AHX36	–	1.01	0.99	1.02
F6FP030	–	1.00	1.00	1.00
F6FP036	–	1.00	0.99	1.01
MV12B	FC/MC35B	1.00	0.99	1.01
MV12B	FC/MC43B	1.00	0.95	1.05
MX12B	FC/MC35B	0.99	0.97	1.02
MX12B	FC/MC43B	0.99	0.97	1.02

Furnace	Coil	MBH	COP	KW
T*(8,L)X*A12	FC/MC/PC32A	0.99	0.97	1.02
T*(8,L)X*B12	FC/MC/PC35B	0.99	0.96	1.03
T*(8,L)X*C16	FC/MC/PC35C	0.99	0.96	1.03
T*(8,L)X*C20	FC/MC/PC35C	0.99	0.96	1.03
T*9X*B12	FC/MC/PC35B	0.99	0.97	1.02
T*9X*C16	FC/MC/PC35C	0.99	0.95	1.04
T*9X*C20	FC/MC/PC35C	1.00	0.98	1.02

Furnace	Coil	MBH	COP	KW
T*(8,L)X*A12	FC/MC/PC37A	1.00	0.94	1.07
T*(8,L)X*B12	FC/MC/PC43B	0.99	0.93	1.07
T*(8,L)X*C16	FC/MC/PC43C	0.99	0.93	1.07
T*9X*B12	FC/MC/PC43B	1.00	0.94	1.07
T*9X*C16	FC/MC/PC43C	0.99	0.95	1.04
T*9X*C20	FC/MC/PC43C	0.99	0.96	1.03
(Y*LC/T*8V/T*LV)*A12	FC/MC/PC32A	1.00	1.01	0.99
(Y*LC/T*8V/T*LV)*B12	FC/MC/PC35B	0.99	1.01	0.98
(Y*LC/T*8V/T*LV)*C16	FC/MC/PC35C	1.00	0.99	1.01
(Y*LC/T*8V/T*LV)*C20	FC/MC/PC35C	0.98	0.99	0.99
(Y*9C/T*9V)*B12	FC/MC/PC35B	1.00	1.00	1.00
(Y*9C/T*9V)*C16	FC/MC/PC35C	1.00	0.98	1.02
(Y*9C/T*9V)*C20	FC/MC/PC35C	0.99	1.01	0.98
(Y*LC/T*8V/T*LV)*A12	FC/MC/PC37A	1.01	0.98	1.03
(Y*LC/T*8V/T*LV)*B12	FC/MC/PC43B	0.99	0.98	1.01
(Y*LC/T*8V/T*LV)*C16	FC/MC/PC43C	1.00	0.95	1.05
(Y*LC/T*8V/T*LV)*C20	FC/MC/PC43C	0.99	0.97	1.02
(Y*9C/T*9V)*B12	FC/MC/PC43B	1.00	0.96	1.04
(Y*9C/T*9V)*C16	FC/MC/PC43C	1.00	0.95	1.05
(Y*9C/T*9V)*C20	FC/MC/PC43C	1.01	0.96	1.05

HEATING PERFORMANCE DATA										
CONDENSING UNIT MODEL NO		**THGF30S41S3**								
EVAPORATOR COIL MODEL NO		**AHX36**								
AIR TEMP. ENTERING OUTDOOR UNIT	**AIR TEMP. ENTERING INDOOR COIL**	ID CFM								
		800			1000			1200		
		MBH	COP	KW	MBH	COP	KW	MBH	COP	KW
60	60	36.1	4.9	2.14	36.5	5.2	2.06	36.9	5.5	1.98
	70	35.0	4.3	2.40	35.5	4.5	2.30	36.0	4.8	2.20
	80	34.0	3.7	2.67	34.6	4.0	2.54	35.1	4.3	2.41
47	60	30.5	4.4	2.03	30.9	4.6	1.97	31.3	4.8	1.91
	70	29.7	3.8	2.30	30.1	4.0	2.20	30.5	4.2	2.10
	80	29.0	3.3	2.56	29.3	3.5	2.46	29.7	3.7	2.35
40	60	27.7	4.0	2.02	28.0	4.2	1.96	28.3	4.4	1.90
	70	26.9	3.5	2.25	27.2	3.7	2.18	27.6	3.8	2.11
	80	26.1	3.1	2.48	26.5	3.2	2.40	26.9	3.4	2.32
30	60	24.0	3.6	1.96	24.2	3.7	1.92	24.4	3.8	1.87
	70	23.1	3.1	2.19	23.4	3.2	2.14	23.6	3.3	2.09
	80	22.3	2.7	2.42	22.6	2.8	2.36	22.9	2.9	2.30
17	60	19.1	3.0	1.89	19.3	3.0	1.87	19.5	3.1	1.85
	70	18.4	2.6	2.03	18.7	2.8	1.99	18.9	2.9	1.94
	80	17.3	2.3	2.25	17.7	2.4	2.20	18.1	2.5	2.14
10	60	16.7	2.7	1.80	16.8	2.8	1.77	16.9	2.9	1.74
	70	15.3	2.3	1.99	15.7	2.3	1.96	16.0	2.4	1.93
	80	13.9	1.9	2.19	14.5	2.0	2.15	15.1	2.1	2.10
NOTE: ALL CAPACITIES ARE NET, WITH INDOOR FAN HEAT ALREADY DEDUCTED. KW VALUES ARE FOR THE SYSTEM (OUTDOOR + INDOOR).										

Multipliers for determining the performance with other indoor sections.

Air Handler	Coil	MBH	COP	KW
–	FC/MC/PC43	1.02	0.93	1.10
AHE36C	–	1.00	0.98	1.02
AV*36	–	0.99	1.00	1.00
F6FP042	–	0.99	1.00	1.00
MV12B	FC/MC43B	1.00	1.03	0.97
MV16C	FC/MC43C	1.00	1.02	0.98
MX12B	FC/MC43B	1.00	0.98	1.03
MX16C	FC/MC43C	1.00	0.99	1.01

Furnace	Coil	MBH	COP	KW
T*(8,L)X*A12	FC/MC/PC37A	1.00	1.00	1.01
T*(8,L)X*B12	FC/MC/PC43B	1.00	1.00	1.00
T*(8,L)X*C16	FC/MC/PC43C	1.00	1.01	0.99
T*9X*B12	FC/MC/PC43B	1.00	1.01	1.00
T*9X*C16	FC/MC/PC43C	1.00	1.01	0.99
(Y*LC/T*8V/T*LV)*A12	FC/MC/PC37A	1.00	1.05	0.95
(Y*LC/T*8V/T*LV)*B12	FC/MC/PC43B	1.00	1.04	0.97
(Y*LC/T*8V/T*LV)*C16	FC/MC/PC43C	1.00	1.02	0.98
(Y*LC/T*8V/T*LV)*C20	FC/MC/PC43C	1.00	1.02	0.99
(Y*9C/T*9V)*B12	FC/MC/PC43B	1.00	1.04	0.96
(Y*9C/T*9V)*C16	FC/MC/PC43C	1.00	1.03	0.98
(Y*9C/T*9V)*C20	FC/MC/PC43C	1.00	1.03	0.98

HEATING PERFORMANCE DATA										
CONDENSING UNIT MODEL NO		THGF36S41S3								
EVAPORATOR COIL MODEL NO		AHX36								
AIR TEMP. ENTERING OUTDOOR UNIT	AIR TEMP. ENTERING INDOOR COIL	ID CFM								
		1000			1200			1400		
		MBH	COP	KW	MBH	COP	KW	MBH	COP	KW
60	60	46.3	4.5	2.99	46.9	4.7	2.90	47.5	4.9	2.82
	70	45.4	4.0	3.34	45.8	4.1	3.25	46.2	4.3	3.15
	80	44.4	3.5	3.71	44.6	3.6	3.59	44.8	3.8	3.48
47	60	39.2	4.0	2.88	39.5	4.1	2.82	39.8	4.2	2.75
	70	38.6	3.5	3.22	38.8	3.7	3.08	39.1	3.9	2.95
	80	38.1	3.1	3.58	38.2	3.2	3.49	38.3	3.3	3.41
40	60	35.9	3.8	2.79	36.0	3.8	2.75	36.1	3.9	2.71
	70	35.4	3.3	3.14	35.5	3.4	3.08	35.5	3.5	3.02
	80	34.9	2.9	3.50	34.9	3.0	3.41	34.9	3.1	3.33
30	60	31.1	3.3	2.73	31.1	3.4	2.70	31.0	3.4	2.67
	70	30.7	2.9	3.11	30.7	2.9	3.05	30.7	3.0	2.99
	80	30.2	2.6	3.47	30.3	2.6	3.39	30.4	2.7	3.32
17	60	24.6	2.8	2.60	24.5	2.8	2.59	24.4	2.8	2.58
	70	23.8	2.4	2.89	24.2	2.5	2.81	24.6	2.6	2.73
	80	22.7	2.1	3.22	23.5	2.2	3.13	24.3	2.4	3.03
10	60	21.2	2.6	2.38	20.4	2.6	2.33	19.5	2.5	2.29
	70	20.9	2.2	2.73	19.7	2.2	2.64	18.5	2.1	2.55
	80	20.7	2.0	3.08	19.1	1.9	2.95	17.4	1.8	2.82
NOTE: ALL CAPACITIES ARE NET, WITH INDOOR FAN HEAT ALREADY DEDUCTED. KW VALUES ARE FOR THE SYSTEM (OUTDOOR + INDOOR).										

Multipliers for determining the performance with other indoor sections.

Air Handler	Coil	MBH	COP	KW
–	FC/MC/PC48	1.02	0.95	1.08
AHE36C	–	0.91	0.91	1.00
AHE42D	–	0.91	0.91	1.01
AHE48D	–	1.00	1.00	1.00
AV*36	–	1.00	1.01	0.99
AV*48	–	1.00	1.00	1.00
AHX42	–	1.00	0.99	1.01
AHX48	–	1.00	1.00	1.00
F6FP042	–	1.00	0.98	1.02
MV12B	FC/MC43B	1.00	1.02	0.98
MV16C	FC/MC43C	1.00	1.02	0.98
MV12D	FC/MC48D	0.91	0.90	1.01
MX12B	FC/MC43B	0.91	0.93	0.98
MX16C	FC/MC43C	0.91	0.90	1.02
MX12D	FC/MC48D	0.91	0.90	1.01
MX16C	FC/MC48C	0.91	0.91	1.00

Furnace	Coil	MBH	COP	KW
T*(8,L)X*A12	FC/MC/PC37A	1.00	1.00	1.00
T*(8,L)X*B12	FC/MC/PC43B	1.00	1.00	1.00
T*(8,L)X*C16	FC/MC/PC43C	1.00	1.01	0.99
T*(8,L)X*C20	FC/MC/PC43C	1.00	0.98	1.02
T*9X*B12	FC/MC/PC43B	1.00	1.00	1.00
T*9X*C16	FC/MC/PC43C	1.00	0.99	1.01
T*9X*C20	FC/MC/PC43C	1.00	1.02	0.98
(Y*LC/T*8V/T*LV)*C16	FC/MC/PC43C	1.00	1.02	0.98
(Y*LC/T*8V/T*LV)*C20	FC/MC/PC43C	1.00	1.02	0.98
(Y*9C/T*9V)*C16	FC/MC/PC43C	1.00	1.01	0.99
(Y*9C/T*9V)*C20	FC/MC/PC43C	1.00	1.03	0.97

HEATING PERFORMANCE DATA										
CONDENSING UNIT MODEL NO		THGF42S41S3								
EVAPORATOR COIL MODEL NO		AHX60								
AIR TEMP. ENTERING OUTDOOR UNIT	AIR TEMP. ENTERING INDOOR COIL	ID CFM								
		1200			1400			1600		
		MBH	COP	KW	MBH	COP	KW	MBH	COP	KW
60	60	42.9	4.5	2.82	42.7	4.4	2.87	42.4	4.3	2.92
	70	42.7	4.1	3.07	42.6	4.0	3.11	42.4	3.9	3.15
	80	42.5	3.8	3.31	42.5	3.7	3.35	42.4	3.7	3.38
47	60	39.0	4.4	2.61	39.0	4.3	2.67	39.0	4.2	2.73
	70	38.4	3.9	2.88	38.5	3.9	2.88	38.6	3.9	2.88
	80	37.8	3.5	3.16	38.0	3.5	3.21	38.3	3.4	3.27
40	60	36.1	4.1	2.55	36.3	4.1	2.62	36.5	4.0	2.68
	70	35.3	3.7	2.82	35.7	3.6	2.89	36.1	3.6	2.96
	80	34.5	3.3	3.09	35.1	3.3	3.16	35.7	3.2	3.23
30	60	31.3	3.7	2.49	31.5	3.6	2.57	31.6	3.5	2.64
	70	30.7	3.3	2.76	30.9	3.2	2.83	31.0	3.1	2.90
	80	30.1	2.9	3.04	30.3	2.9	3.10	30.5	2.8	3.16
17	60	24.9	3.2	2.30	25.2	3.0	2.45	25.5	2.9	2.59
	70	24.7	2.6	2.74	25.5	2.7	2.82	26.4	2.7	2.90
	80	23.1	2.2	3.05	24.5	2.3	3.11	25.9	2.4	3.16
10	60	22.3	2.6	2.51	22.9	2.6	2.55	23.4	2.6	2.60
	70	22.3	2.3	2.79	22.7	2.4	2.82	23.2	2.4	2.85
	80	22.4	2.2	3.04	22.6	2.2	3.07	22.9	2.2	3.11
NOTE: ALL CAPACITIES ARE NET, WITH INDOOR FAN HEAT ALREADY DEDUCTED. KW VALUES ARE FOR THE SYSTEM (OUTDOOR + INDOOR).										

Multipliers for determining the performance with other indoor sections.

Air Handler	Coil	MBH	COP	KW
–	FC/MC/PC48	1.01	0.93	1.09
–	FC/MC/PC60	1.02	0.96	1.06
–	FC/MC62	1.02	0.94	1.08
AHE42D	–	0.99	0.97	1.02
AHE48D	–	0.99	0.97	1.01
AHE60D	–	1.00	1.01	0.99
F6FP060	–	1.00	1.00	1.00
MV16C	FC/MC48C	1.00	0.96	1.03
MV20D	FC/MC48D	1.00	0.99	1.01
MV16C	FC/MC60C	1.01	1.01	1.00
MV20D	FC/MC60D	1.00	1.02	0.98
MV20D	FC/MC62D	1.00	1.01	0.99
MX16C	FC/MC48C	0.99	0.98	1.01
MX20D	FC/MC48D	0.99	0.98	1.01
MX16C	FC/MC60C	1.00	1.03	0.98
MX20D	FC/MC60D	1.00	1.05	0.96
MX20D	FC/MC62D	1.00	0.98	1.02

Furnace	Coil	MBH	COP	KW
T*(8,L)X*C16	FC/MC/PC48C	0.99	0.98	1.01
T*(8,L)X*C20	FC/MC/PC48C	1.00	0.99	1.01
T*9X*C16	FC/MC/PC48C	1.00	0.96	1.04
T*9X*C20	FC/MC/PC48C	1.00	0.97	1.03
T*9X*D20	FC/MC/PC48D	0.99	0.97	1.02
T*(8,L)X*C16	FC/PC60C	1.00	1.03	0.97

Furnace	Coil	MBH	COP	KW
T*(8,L)X*C20	FC/PC60C	1.00	1.03	0.98
T*9X*C16	FC/PC60C	1.01	1.01	1.00
T*9X*C20	FC/PC60C	1.00	1.02	0.99
T*9X*D20	FC/MC/PC60D	1.00	1.04	0.97
T*(8,L)X*C16	FC/MC62D	1.00	0.99	1.01
T*(8,L)X*C20	FC/MC62D	1.00	0.99	1.01
T*9X*C16	FC/MC62D	1.00	1.02	0.98
T*9X*C20	FC/MC62D	1.00	1.01	0.99
T*9X*D20	FC/MC62D	1.00	1.01	0.99
Y*(8,L)C*C16	FC/MC/PC48C	1.00	0.94	1.06
Y*(8,L)C*C20	FC/MC/PC48C	1.00	0.96	1.04
Y*9C*C16	FC/MC/PC48C	1.00	0.95	1.06
Y*9C*C20	FC/MC/PC48C	1.01	0.94	1.07
Y*9C*D20	FC/MC/PC48D	1.00	0.95	1.05
Y*(8,L)C*C16	FC/PC60C	1.01	0.99	1.02
Y*(8,L)C*C20	FC/PC60C	1.01	1.01	0.99
Y*9C*C16	FC/PC60C	1.02	0.97	1.04
Y*9C*C20	FC/PC60C	1.01	0.99	1.02
Y*9C*D20	FC/MC/PC60D	1.01	0.99	1.02
(Y*LC/T*8V/T*LV)*C16	FC/MC62D	1.01	1.03	0.98
(Y*LC/T*8V/T*LV)*C20	FC/MC62D	1.00	1.01	0.99
(Y*9C/T*9V)*C16	FC/MC62D	1.01	1.06	0.95
(Y*9C/T*9V)*C20	FC/MC62D	1.01	1.05	0.96
(Y*9C/T*9V)*D20	FC/MC62D	1.01	1.04	0.97

HEATING PERFORMANCE DATA										
CONDENSING UNIT MODEL NO		THGF48S41S3								
EVAPORATOR COIL MODEL NO		F6FP060								
AIR TEMP. ENTERING OUTDOOR UNIT	AIR TEMP. ENTERING INDOOR COIL	ID CFM								
		1400			1600			1800		
		MBH	COP	KW	MBH	COP	KW	MBH	COP	KW
60	60	60.5	5.2	3.41	61.2	4.9	3.64	61.9	4.7	3.88
	70	59.2	4.5	3.87	59.8	4.3	4.08	60.4	4.1	4.29
	80	57.9	3.9	4.33	58.4	3.8	4.51	58.9	3.7	4.69
47	60	51.6	4.3	3.48	51.8	4.1	3.70	52.0	3.9	3.92
	70	50.5	3.8	3.92	50.7	3.8	3.88	51.0	3.9	3.85
	80	49.4	3.3	4.34	49.7	3.1	4.68	50.0	2.9	5.02
40	60	46.4	3.9	3.50	46.6	3.7	3.73	46.8	3.5	3.96
	70	45.7	3.4	4.00	45.8	3.2	4.23	45.8	3.0	4.47
	80	45.0	2.9	4.50	44.9	2.8	4.74	44.9	2.6	4.98
30	60	38.7	3.4	3.31	39.0	3.2	3.59	39.4	3.0	3.88
	70	37.6	3.2	3.48	38.1	2.9	3.87	38.6	2.7	4.25
	80	36.4	2.9	3.65	37.2	2.6	4.14	37.9	2.4	4.62
17	60	28.9	3.2	2.66	30.2	3.0	2.93	31.6	2.9	3.20
	70	31.2	2.6	3.52	32.2	2.6	3.59	33.2	2.7	3.66
	80	29.6	2.3	3.71	30.2	2.3	3.80	30.8	2.3	3.89
10	60	27.3	2.6	3.05	27.0	2.5	3.14	26.7	2.4	3.23
	70	26.5	2.3	3.36	27.5	2.2	3.67	28.5	2.1	3.99
	80	25.7	2.1	3.66	28.0	2.0	4.21	30.4	1.9	4.75
NOTE: ALL CAPACITIES ARE NET, WITH INDOOR FAN HEAT ALREADY DEDUCTED. KW VALUES ARE FOR THE SYSTEM (OUTDOOR + INDOOR).										

Multipliers for determining the performance with other indoor sections.

Air Handler	Coil	MBH	COP	KW
–	FC/MC62	1.02	0.96	1.07
AHE60D	–	0.93	0.94	0.99
AHX60	–	1.00	1.01	0.99
MV20D	FC/MC62D	1.00	1.01	0.99
MV20D	FC64D	0.99	0.99	1.01
MX20D	FC/MC62D	0.93	0.92	1.01
MX20D	FC64D	0.93	0.90	1.04

Furnace	Coil	MBH	COP	KW
T*(8,L)X*C16	FC/MC62D	1.00	1.02	0.98
T*(8,L)X*C20	FC/MC62D	1.00	1.01	0.99
T*9X*C16	FC/MC62D	1.00	1.02	0.98
T*9X*C20	FC/MC62D	1.00	1.01	0.99
T*9X*D20	FC/MC62D	1.00	1.02	0.98
T*(8,L)X*C16	FC64D	1.00	1.00	1.00
T*(8,L)X*C20	FC64D	1.00	0.99	1.00
T*9X*C16	FC64D	1.00	1.01	0.99
T*9X*C20	FC64D	1.00	1.00	1.00
T*9X*D20	FC64D	1.00	1.01	0.99
(Y*LC/T*8V/T*LV)*C16	FC/MC62D	1.00	1.02	0.98
(Y*LC/T*8V/T*LV)*C20	FC/MC62D	1.00	1.02	0.98
(Y*9C/T*9V)*C16	FC/MC62D	1.00	1.03	0.97
(Y*9C/T*9V)*C20	FC/MC62D	1.00	1.04	0.96
(Y*9C/T*9V)*D20	FC/MC62D	1.00	1.03	0.97
(Y*LC/T*8V/T*LV)*C16	FC64D	1.00	1.01	0.99
(Y*LC/T*8V/T*LV)*C20	FC64D	1.00	1.00	1.00
(Y*9C/T*9V)*C16	FC64D	1.00	1.02	0.98
(Y*9C/T*9V)*C20	FC64D	1.01	1.04	0.97
(Y*9C/T*9V)*D20	FC64D	1.00	1.02	0.98

HEATING PERFORMANCE DATA - HIGH CFM 2-STAGE OPERATION										
CONDENSING UNIT MODEL NO		**THGF60S41S3**								
EVAPORATOR COIL MODEL NO		**AHX60**								
AIR TEMP. ENTERING OUTDOOR UNIT	**AIR TEMP. ENTERING INDOOR COIL**	ID CFM								
		1600			1800			2000		
		MBH	COP	KW	MBH	COP	KW	MBH	COP	KW
60	60	71.2	4.5	4.60	72.4	4.7	4.56	73.6	4.8	4.52
	70	70.3	4.1	5.07	71.3	4.2	5.02	72.3	4.3	4.97
	80	69.4	3.7	5.56	70.1	3.7	5.49	70.9	3.8	5.42
47	60	62.1	4.1	4.41	62.6	4.2	4.38	63.1	4.3	4.35
	70	61.2	3.7	4.90	61.6	3.7	4.86	62.1	3.8	4.81
	80	60.2	3.3	5.37	60.6	3.3	5.31	61.1	3.4	5.25
40	60	56.4	3.9	4.29	56.8	3.9	4.27	57.2	4.0	4.25
	70	55.7	3.4	4.78	56.0	3.5	4.74	56.2	3.5	4.70
	80	55.0	3.1	5.26	55.1	3.1	5.20	55.2	3.1	5.14
30	60	49.4	3.5	4.14	49.8	3.5	4.16	50.1	3.5	4.19
	70	47.9	3.0	4.72	47.9	3.0	4.67	47.8	3.0	4.63
	80	46.4	2.6	5.31	46.0	2.6	5.19	45.6	2.6	5.07
17	60	40.1	2.9	4.00	37.4	2.9	3.73	34.8	2.9	3.46
	70	41.4	2.6	4.64	40.1	2.6	4.49	38.9	2.6	4.34
	80	41.2	2.3	5.15	41.5	2.4	5.15	41.7	2.4	5.15
10	60	36.1	2.6	3.99	36.5	2.7	4.03	37.0	2.7	4.07
	70	34.7	2.3	4.47	35.8	2.3	4.50	36.8	2.4	4.53
	80	33.4	2.0	4.94	35.0	2.1	4.96	36.6	2.2	4.98
NOTE: ALL CAPACITIES ARE NET, WITH INDOOR FAN HEAT ALREADY DEDUCTED. KW VALUES ARE FOR THE SYSTEM (OUTDOOR + INDOOR).										

Multipliers for determining the performance with other indoor sections.

Air Handler	Coil	MBH	COP	KW
–	FC/MC62	0.96	0.96	1.00
AHE60D	–	0.95	0.99	0.96
MV20D	FC/MC62D	0.99	0.99	1.00
MV20D	FC64D	0.97	0.96	1.01
MX20D	FC/MC62D	0.95	1.00	0.95
MX20D	FC64D	0.95	1.03	0.93

Furnace	Coil	MBH	COP	KW
T*(8,L)X*C20	FC/MC62D	0.97	1.10	0.89
T*9X*C20	FC/MC62D	1.00	1.00	1.01
T*9X*D20	FC/MC62D	1.00	0.99	1.02
T*(8,L)X*C20	FC64D	0.97	0.97	1.01
T*9X*C20	FC64D	0.97	0.99	0.98
T*9X*D20	FC64D	0.97	0.98	0.99
(Y*LC/T*8V/T*LV)*C20	FC/MC62D	0.99	1.04	0.95
(Y*9C/T*9V)*C20	FC/MC62D	0.99	1.04	0.96
(Y*9C/T*9V)*D20	FC/MC62D	1.00	1.03	0.97
(Y*LC/T*8V/T*LV)*C20	FC64D	0.97	0.99	0.98
(Y*9C/T*9V)*C20	FC64D	0.97	1.00	0.97
(Y*9C/T*9V)*D20	FC64D	0.97	0.99	0.98

Subject to change without notice. Published in U.S.A.
Copyright © 2011 by Johnson Controls, Inc. All rights reserved.

560593-YTG-B-1211
Supersedes: 560593-YTG-A-0310

Johnson Controls Unitary Products
5005 York Drive
Norman, OK 73069