YORK®
Heating and Air Conditioning

TECHNICAL GUIDE

AFFINITY™ SERIES
SPLIT SYSTEM AIR CONDITIONERS
18 SEER – R-410A – 1 PHASE
2 THRU 5 NOMINAL TONS
MODELS: CZH024 THRU 060*

AHRI CERTIFIED™ www.ahridirectory.org Unitary Small AC AHRI Standard 210/240 Certification applies only when the complete system is listed with AHRI.

LIMITED WARRANTY TO CONSUMERS Good Housekeeping Promises REPLACEMENT OR REFUND IF DEFECTIVE

CSA® C US

energy ENERGY STAR

ISO 9000 REGISTRATION
ISO 9001
Certified Quality
Management System

Due to continuous product improvement, specifications are subject to change without notice.

Visit us on the web at
www.upgnet.com and www.york.com

Additional rating information can be found at
www.ahridirectory.org

WARRANTY SUMMARY*

Standard 10-Years limited parts warranty.
Extended Lifetime limited compressor warranty.

Extended parts and compressor warranties require online registration within 90 days of purchase for replacement or closing for new home construction.

* Does not apply to R-22 models, 3-Phase models, or internet sales.
See Limited Warranty certificate in User's Information Manual for details.

DESCRIPTION

The 18 SEER Series unit is the outdoor part of a versatile climate system. It is designed with a matching indoor coil component from Johnson Controls Unitary Products. Available for typical applications this climate system is supported with accessories and documents to serve specific functions.

FEATURES

- **Superior Coil Protection –** A stamped, decorative metal coil guard protects the tube-in-fin coil from debris and other damaging material.
- **Protected Compressors –** The compressor is safeguarded against abnormal pressures and temperatures by an internal pressure relief valve, an internal temperature sensor, and factory high and low pressure system controls. A factory installed liquid line filter-drier further protects the compressor against moisture and debris.
- **Environmentally Friendly Refrigerant –** The next generation refrigerant R-410A delivers environmentally friendly performance with zero ozone depletion.
- **Durable Finish –** An automotive quality finish provides the ultimate protection from harmful UV rays and rust creep, ensuring a long-lasting, high quality appearance. A powder-paint topcoat is applied over a baked-on primer using a galvanized, zinc coated steel base material. The result is a finish that has been proven in testing to provide 33% greater durability than conventional powder-coat finishes.
- **QuietDrive™ System -** Features combination of swept-wing fan, composite base pan, isolated compressor compartment, and two-stage compressor to reduce overall sound to a mere whisper.
- **Low RPM ECM Fan Motor -** Helps to reduce airflow noise.
- **Swept Wing Fan –** A fan design boasting technology adapted from aeronautic and defense engineering provides for whisper-quiet operation by allowing air to flow smoothly and efficiently across the fan tips.
- **Composite Base Pan -** The strong and durable composite base pan provides added strength while resisting rust and corrosion, as well as reducing sound and vibration.
- **Isolated Compressor Compartment –** A molded composite bulkhead isolates the refrigeration components and the compressor from the rest of the unit, reducing sound and vibration.
- **Lower Installed Cost –** Designed to provide enhanced installability by featuring a slide-down control compartment that allows easy access to control components, along with angled service valves to reduce overall installation time and cost. Factory charged for a 15 foot lineset.
- **Factory Installed Filter-Drier** – A factory installed, solid core liquid line filter-drier removes harmful debris and moisture from the system.
- **Easy Service Access –** A full end, full service access panel with handle makes for easy entry to internal components.
- **Communications Capable –** Requiring only a simple 4-wire installation, the communicating capability enables the use of the Touch Screen Communicating Control, allowing real time visibility of system operation and the use of diagnostic features, while still maintaining the ability to function with a traditional thermostat.
- **Agency Listed -** Safety certified by CSA to UL 1995 / CSA 22.2. Performance certified to ANSI/AHRI Standard 210/240 in accordance with the Unitary Small Equipment certification program.

Physical and Electrical Data

MODEL		CZH02411(C)	CZH03611(C)	CZH04811(C)	CZH06011(C)
Unit Supply Voltage		208-230V, 1ϕ, 60Hz			
Normal Voltage Range [1]		187 to 252			
Minimum Circuit Ampacity		15.6	23.6	29.2	34.8
Max. Overcurrent Device Amps [2]		25	40	50	60
Min. Overcurrent Device Amps [3]		20	25	30	35
Compressor Type		2-Stage Scroll	2-Stage Scroll	2-Stage Scroll	2-Stage Scroll
Compressor Amps	Rated Load	10.3	16.7	21.2	25.6
	Locked Rotor	52	82	96	118
Crankcase Heater		No	No	No	No
Factory External Discharge Muffler		No	No	No	No
Factory External Check Valve		No	No	No	No
HS Kit Required with TXV [4]		No	No	No	No
Fan Motor Amps	Rated Load	2.8	2.8	2.8	2.8
Fan Diameter Inches		24	24	24	24
Fan Motor	Rated HP	1/3	1/3	1/3	1/3
	Nominal RPM	685	685	685	685
	Nominal CFM	2900	3200	3100	3150
Coil	Face Area Sq. Ft.	23.6	23.6	23.6	23.6
	Rows Deep	2	2	2	2
	Fins / Inch	16	16	14	14
Liquid Line Set OD (Field Installed)		3/8	3/8	3/8	3/8
Vapor Line Set OD (Field Installed)		3/4	3/4	7/8	7/8
Unit Charge (Lbs. - Oz.) [5]		15 - 4	14 - 10	12 - 13	12 - 12
Charge Per Foot, Oz.		0.62	0.62	0.67	0.67
Operating Weight Lbs.		305	305	310	330

1. Rated in accordance with AHRI Standard 110-2012, utilization range “A”.
2. Dual element fuses or HACR circuit breaker. Maximum allowable overcurrent protection.
3. Dual element fuses or HACR circuit breaker. Minimum recommended overcurrent protection.
4. See Hard Start Kit Accessory Installation Manual for Hard Start Kit part number for each model.
5. The Unit Charge is correct for the outdoor unit, smallest matched indoor unit, and 15 feet of refrigerant tubing. For tubing lengths other than 15 feet, add or subtract the amount of refrigerant, using the difference in length multiplied by the per foot value.

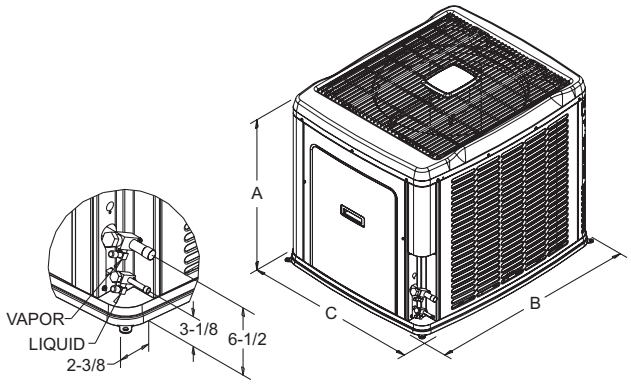

All dimensions are in inches. They are subject to change without notice. Certified dimensions will be provided upon request.

Unit Model	Dimensions (Inches)			Refrigerant Connection Service Valve Size	
	A[1]	B[2]	C[3]	Liquid	Vapor
24	40	42-1/4	34	3/8	3/4
36	40	42-1/4	34		
48	40	42-1/4	34		7//8
60	40	42-1/4	34		

1. Overall Height, from Bottom of Base Pan to Top of Fan Guard.
2. Overall Length, Including Screw Heads.
3. Overall Width, Including Screw Heads.

System Charge for Various Matched Systems				
Outdoor Unit	CZH02411(C)	CZH03611(C)	CZH04811(C)	CZH06011(C)
Required TXV [1,2]	4F1	4H1	4J1	4K1
Indoor Unit [3,4,5]	**TXV Kit - Additional Charge, Oz**			
AHE24B	0	–	–	–
AHE30B	0	–	–	–
AHE36C	–	5	–	–
AHE42D	–	5	–	–
AHE48D	–	–	7	–
AHE60D	–	–	12	10
AHX30	0	–	–	–
AHX36	5	6	–	–
AHX42	–	21	–	–
AHX48	–	11	7	–
AHX60	–	20	12	10
AV*36	6	5	–	–
AV*48	–	13	8	–
AV*60	–	–	8	6
F4FV060	–	–	0	0
FC/MC/PC32	0	–	–	–
FC/MC/PC35	0	0	–	–
FC/MC/PC37	5	6	–	–
FC/MC/PC43	5	6	–	–
FC/MC/PC48	14	12	8	–
FC/MC/PC60	–	15	7	5
FC/MC62	–	20	12	10
FC64	–	25	20	17
HD36	5	–	–	–
HD48	–	25	–	–
HD60	–	–	12	9
UC48	9	14	3	–
UC60	–	–	8	6
Some of the combinations shown in the above System Charge table require Advanced Main Air Circulating Fan indoor product. For approved coil only matches, please see the “COOLING CAPACITY - Upflow, Downflow & Horizontal Furnaces and Coils” table.				

FOOTNOTES:

1. For applications requiring a TXV use S1-1TVM*** series kit.
2. A TXV kit must be used with these indoor units to obtain system performance.
3. Systems matched with furnaces or air handlers not equipped with blower-off delays may require blower Time Delay Kit S1-2FD06700224.
4. PC coils cannot be used in downflow or horizontal applications. FC coils cannot be used in horizontal applications.
5. Refer to Cooling Performance Data tables for actual performance for specified system matches.

PROCEDURES:

1. Unit factory charge listed on the unit nameplate includes refrigerant for the outdoor unit, the smallest matched indoor unit, and 15 feet of interconnecting line tubing.
2. Verify the TXV and additional charge required for specific matched indoor unit in the system using the above table.
3. Add additional charge for the amount of interconnecting line tubing greater than 15 feet at the rate specified in Physical and Electrical Data Table.
4. For indoor matches requiring additional charge, the refrigerant needs to be weighed in for specific matched indoor unit and lineset length.
5. Permanently mark the unit nameplate with the total system charge. Total System Charge = Base Charge (as shipped) + charge adder for matched indoor unit + charge adder for line set.

COOLING CAPACITY - With Air Handler Coils

UNIT MODEL	AIR HANDLER		COIL MODEL[1]	COOLING					
	MODEL	WIDTH		STAGE	RATED CFM	NET MBH TOTAL	NET MBH SENS.	SEER	EER
18 SEER AC WITH AIR HANDLERS									
CZH02411(C)	AHE24B	17.5	–	1	515	17.9	12.7	16.75	13.50
				2	795	23.6	16.8		
	AHE30B	17.5	–	1	515	17.9	12.7	16.75	13.50
				2	795	23.6	16.8		
	AHX30	17.5	–	1	545	17.6	12.6	16.75	13.50
				2	820	24.2	17.3		
	AHX36	21.0	–	1	505	17.4	12.1	15.75	13.00
				2	820	24.0	17.1		
	AV*36	21.0	–	1	505	17.6	12.2	17.00	13.75
				2	725	24.0	16.5		
	MV12B	17.5	FC/MC35B	1	620	18.2	13.8	17.05	13.80
				2	800	23.6	17.2		
	MV12B	17.5	FC/MC43B	1	620	18.5	14.0	17.20	14.00
				2	800	24.0	17.5		
	MV12D	24.5	FC/MC48D	1	645	18.9	14.3	18.00	14.45
				2	835	24.6	17.9		
CZH03611(C)	AHE36C	21.0	–	1	850	25.9	18.6	18.00	13.75
				2	1190	36.2	25.4		
	AHE42D	21.0	–	1	685	24.9	17.0	18.00	14.00
				2	1180	36.6	25.8		
	AHX36	21.0	–	1	770	24.8	17.1	18.00	13.50
				2	1225	36.0	25.3		
	AHX42	21.0	–	1	990	26.2	19.6	18.50	13.75
				2	1190	36.6	25.8		
	AHX48	24.5	–	1	885	25.2	18.2	18.00	13.50
				2	1255	36.2	25.8		
	AHX60	24.5	–	1	1095	26.6	20.7	18.25	13.75
				2	1300	37.0	26.7		
	AV*36	21.0	–	1	765	24.8	17.1	18.00	13.50
				2	1190	36.0	25.3		
	AV*48	24.5	–	1	815	25.2	17.6	18.00	13.50
				2	1220	36.2	25.5		
	MV12B	17.5	FC/MC43B	1	775	25.6	18.0	17.70	13.55
				2	1200	36.0	25.2		
	MV12D	24.5	FC/MC48D	1	735	25.6	18.0	18.40	13.95
				2	1135	36.0	25.2		
	MV12D	24.5	FC/MC60D	1	735	25.1	17.4	17.75	13.50
				2	1135	36.0	25.0		
	MV12D	24.5	FC/MC62D	1	735	25.7	18.1	18.50	14.25
				2	1135	36.6	25.6		
	MV12D	24.5	FC64D	1	780	26.2	18.4	18.50	14.50
				2	1155	36.0	25.6		
	MV16C	21.0	FC/MC43C	1	775	25.7	18.1	18.00	14.00
				2	1200	36.2	25.3		
	MV16C	21.0	FC/MC48C	1	775	25.9	18.2	18.40	14.15
				2	1200	36.4	25.4		
	MV20D	24.5	FC/MC48D	1	770	25.8	18.1	18.30	14.20
				2	1200	36.6	26.7		

For Notes See Page 6.

COOLING CAPACITY - With Air Handler Coils (Continued)

UNIT MODEL	AIR HANDLER		COIL MODEL[1]	COOLING					
	MODEL	WIDTH		STAGE	RATED CFM	NET MBH TOTAL	NET MBH SENS.	SEER	EER
18 SEER AC WITH AIR HANDLERS									
CZH03611(C)	MV20D	24.5	FC/MC60D	1	860	25.7	18.7	18.00	13.50
				2	1300	36.8	26.6		
	MV20D	24.5	FC/MC62D	1	770	25.9	18.2	18.30	14.35
				2	1200	37.0	25.9		
	MV20D	24.5	FC64D	1	860	26.9	19.7	18.75	14.25
				2	1300	38.5	28.2		
	MX12B	17.5	FC/MC43B	1	735	25.1	17.5	18.00	13.25
				2	1220	36.2	25.6		
	MX12D	24.5	FC/MC48D	1	850	26.3	18.9	18.50	13.75
				2	1225	37.0	26.2		
	MX12D	24.5	FC/MC60D	1	870	25.9	18.8	18.25	13.50
				2	1275	36.8	26.4		
	MX12D	24.5	FC/MC62D	1	800	25.7	18.3	18.25	14.00
				2	1270	37.4	26.7		
	MX12D	24.5	FC64D	1	800	26.5	19.1	18.75	14.50
				2	1270	38.5	28.0		
CZH04811(C)	AHE48D	24.5	–	1	955	32.7	23.5	16.00	12.25
				2	1600	45.5	34.6		
	AHE60D	24.5	–	1	1160	34.1	26.1	16.50	12.50
				2	1565	46.0	35.2		
	AHX48	24.5	–	1	1070	33.1	24.7	16.00	11.75
				2	1660	45.0	34.4		
	AHX60	24.5	–	1	1075	32.6	24.0	16.00	11.75
				2	1680	45.0	34.3		
	AV*48	24.5	–	1	1055	33.1	24.4	16.00	11.75
				2	1625	45.0	34.0		
	AV*60	24.5	–	1	995	32.6	23.7	16.00	11.75
				2	1560	45.0	33.6		
	F4FV060	24.5	–	1	1200	33.6	24.8	16.85	12.15
				2	1600	44.5	34.0		
	MV16C	21.0	FC60C	1	1035	33.1	24.3	16.25	12.00
				2	1625	45.5	34.6		
	MV16C	21.0	FC/MC48C	1	1000	34.0	25.1	17.30	12.45
				2	1600	46.0	35.1		
	MV20D	24.5	FC/MC48D	1	1020	34.0	25.1	17.00	12.35
				2	1600	46.0	35.1		
	MV20D	24.5	FC/MC60D	1	1020	33.1	24.3	15.75	12.00
				2	1600	45.5	34.6		
	MV20D	24.5	FC/MC62D	1	1075	34.1	25.0	17.00	12.50
				2	1630	46.5	35.8		
	MV20D	24.5	FC64D	1	1075	35.4	26.4	17.25	12.75
				2	1630	48.0	37.0		
	MX16C	21.0	FC/MC48C	1	1150	34.3	25.9	16.75	12.25
				2	1685	46.5	35.8		
	MX16C	21.0	FC60C	1	1015	33.3	24.5	16.50	12.50
				2	1630	46.0	34.8		

For Notes See Page 6.

COOLING CAPACITY - With Air Handler Coils (Continued)

UNIT MODEL	AIR HANDLER		COIL MODEL[1]	COOLING					
	MODEL	WIDTH		STAGE	RATED CFM	NET MBH TOTAL	NET MBH SENS.	SEER	EER
18 SEER AC WITH AIR HANDLERS									
CZH06011(C)	AHE60D	24.5	–	1	1160	42.1	28.6	15.50	11.75
				2	1835	58.0	42.8		
	AHX60	24.5	–	1	1075	41.5	27.2	15.00	11.25
				2	1905	56.5	39.9		
	AV*60	24.5	–	1	1095	41.5	27.2	15.00	11.50
				2	1730	56.5	38.7		
	F4FV060	24.5	–	1	1200	41.8	28.4	15.55	11.60
				2	1780	55.5	40.5		
	MV20D	24.5	FC/MC60D	1	1030	40.2	27.3	15.30	11.55
				2	1800	55.5	40.5		
	MV20D	24.5	FC/MC62D	1	1030	42.1	28.6	16.00	12.00
				2	1800	58.0	42.3		
	MV20D	24.5	FC64D	1	1075	43.0	28.2	16.25	12.50
				2	1630	59.0	40.5		
	MX20D	24.5	FC/MC60D	1	1265	43.6	30.8	15.75	12.25
				2	1780	58.0	42.3		
	MX20D	24.5	FC/MC62D	1	1390	43.6	30.8	15.75	12.25
				2	1795	58.0	42.3		
	MX20D	24.5	FC64D	1	1390	44.6	32.0	16.00	12.25
				2	1795	59.5	43.8		

Rated in accordance with DOE test procedures (Federal Register 12-27-79 and 3-18-88) and ANSI/AHRI Standard 210/240.
Cooling MBH based on 80°F entering air temperature, 50% RH (Relative Humidity), and rated air flow.
EER (Energy Efficiency Ratio) is the total cooling output in BTUs at 95°F outdoor ambient divided by the total electric power in watt-hours at those conditions.
SEER (Seasonal Energy Efficiency Ratio) is the total cooling output in BTUs during a normal annual usage period for cooling divided by the total electric power input in watt-hours during the same period.

1. MC coils available with a factory installed horizontal drain pan. See price pages for specific model number.

— = Not applicable.
MA Modular Air Handlers use Coil Only Ratings.

COOLING CAPACITY - Upflow, Downflow & Horizontal Furnaces and Coils (Coil Only Ratings)

UNIT MODEL	COIL		CFM RANGE (MIN.-MAX.)	COOLING					
	MODEL	WIDTH		STAGE	RATED CFM	NET MBH TOTAL	NET MBH SENS.	SEER[1]	EER
18 SEER AC COIL ONLY RATINGS									
CZH02411(C)	FC/MC/PC48	21.0,24.5	550 - 650	1	600	18.0	13.3	15.00	12.50
			650 - 950	2	800	23.6	18.8		
CZH03611(C)	FC/MC62	24.5	800 - 1000	1	900	25.4	18.0	15.50	12.50
			1000 - 1400	2	1200	36.0	26.2		
CZH04811(C)	FC/MC62	24.5	1000 - 1400	1	1200	33.8	25.4	14.50	11.50
			1400 - 1800	2	1600	45.5	34.2		
CZH06011(C)	FC/MC62	24.5	1150 - 1550	1	1350	43.0	28.0	14.00	11.20
			1600 - 2000	2	1800	57.0	40.0		

1. Requires a S1-2FD06700224 Blower Time Delay unless a standard furnace is equipped with one.

MA Modular Air Handlers use Coil Only Ratings.
PSC furnaces, such as the TG8S, TGLS, and TG9S, use Coil Only Ratings.

COOLING CAPACITY - With High Efficiency Motor Furnaces

UNIT MODEL	FURNACE		COIL MODEL[1]	COOLING					
	MODEL	WIDTH		STAGE	RATED CFM	NET MBH		SEER	EER
						TOTAL	SENS.		
18 SEER AC WITH HIGH EFFICIENCY MOTOR FURNACES[2]									
CZH02411(C)	T*(8,L)C*A12	14.5	FC/MC/PC32A	1	550	17.5	13.0	16.50	13.25
				2	775	23.0	17.3		
	T*(8,L)C*A12	14.5	FC/MC/PC37A	1	585	18.0	13.3	16.75	13.50
				2	805	23.6	16.7		
	T*(8,L)C*A12	14.5	HD36	1	595	17.5	12.6	16.50	13.25
				2	805	23.0	15.7		
	T*(8,L)C*B12	17.5	FC/MC/PC35B	1	515	17.4	12.7	16.50	13.50
				2	760	23.0	17.3		
	T*(8,L)C*B12	17.5	FC/MC/PC43B	1	515	17.5	12.8	16.75	13.75
				2	760	23.4	17.5		
	T*(8,L)C*B12	17.5	HD36	1	515	17.0	11.9	16.00	13.25
				2	760	22.6	15.5		
	T*(8,L)V*A12	14.5	FC/MC/PC32A	1	550	17.5	13.0	16.50	13.25
				2	775	23.0	17.3		
	T*(8,L)V*A12	14.5	HD36	1	595	17.5	12.6	16.50	13.25
				2	805	23.0	15.7		
	T*(8,L)V*B12	17.5	FC/MC/PC35B	1	515	17.4	12.7	16.50	13.50
				2	760	23.0	17.3		
	T*(8,L)V*B12	17.5	FC/MC/PC43B	1	515	17.5	12.8	16.75	13.75
				2	760	23.4	17.5		
	T*(8,L)V*B12	17.5	HD36	1	515	17.0	11.9	16.00	13.25
				2	760	22.6	15.5		
	T*(8,L)X*A12	14.5	FC/MC/PC32A	1	530	17.5	12.3	16.50	13.25
				2	800	23.0	16.3		
	T*(8,L)X*A12	14.5	FC/MC/PC37A	1	640	18.0	13.4	16.75	13.50
				2	840	23.6	17.0		
	T*(8,L)X*B12	17.5	FC/MC/PC35B	1	675	17.4	13.4	16.50	13.50
				2	850	23.0	16.4		
	T*(8,L)X*B12	17.5	FC/MC/PC43B	1	700	17.5	13.5	16.75	13.75
				2	865	23.4	17.0		
	T*(8,L)X*B12	17.5	HD36	1	655	17.0	12.8	16.00	13.25
				2	855	22.6	15.8		
	T*(8,L)X*C16	21.0	FC/MC/PC35C	1	625	18.0	13.4	17.00	14.00
				2	865	24.2	17.5		
	T*(8,L)X*C16	21.0	FC/MC/PC48C	1	685	18.8	14.4	17.75	14.25
				2	875	24.8	18.1		
	T*(8,L)X*C16	21.0	UC48C	1	685	17.8	13.4	16.75	13.75
				2	875	24.0	17.1		
	T*(8,L)X*C20	21.0	FC/MC/PC35C	1	780	18.8	14.9	17.00	14.00
				2	885	24.2	17.6		
	T*9V*A10	14.5	FC/MC/PC32A	1	580	17.9	13.1	16.00	13.00
				2	785	23.4	16.4		
	T*9V*A10	14.5	FC/MC/PC37A	1	570	18.1	13.0	16.25	13.00
				2	790	23.6	16.7		
	T*9(C,V)*B12	17.5	FC/MC/PC35B	1	550	17.5	12.7	16.50	13.25
				2	815	23.2	16.5		
	T*9(C,V)*B12	17.5	FC/MC/PC43B	1	550	17.8	12.9	17.00	13.75
				2	800	23.6	16.7		

For Notes See Page 17.

COOLING CAPACITY - With High Efficiency Motor Furnaces (Continued)

UNIT MODEL	FURNACE		COIL MODEL[1]	COOLING					
	MODEL	WIDTH		STAGE	RATED CFM	NET MBH		SEER	EER
						TOTAL	SENS.		
18 SEER AC WITH HIGH EFFICIENCY MOTOR FURNACES[2]									
CZH02411(C)	T*9(C,V)*B12	17.5	HD36	1	590	17.5	12.6	16.50	13.50
				2	815	23.0	15.7		
	T*9X*A10	14.5	FC/MC/PC32A	1	580	18.0	13.1	16.25	13.25
				2	745	23.2	16.1		
	T*9X*A10	14.5	FC/MC/PC37A	1	580	18.2	13.3	16.50	13.25
				2	740	23.4	16.2		
	T*9X*B12	17.5	FC/MC/PC35B	1	620	17.5	12.9	16.50	13.25
				2	785	23.2	16.4		
	T*9X*C16	21.0	FC/MC/PC35C	1	610	18.0	13.2	16.75	14.00
				2	765	24.0	16.7		
	T*9X*C16	21.0	FC/MC/PC43C	1	645	18.4	13.7	17.25	14.00
				2	785	24.2	17.1		
	T*9X*C16	21.0	FC/MC/PC48C	1	680	18.6	14.3	17.50	14.25
				2	815	24.4	17.6		
	T*9X*C16	21.0	UC48C	1	680	17.7	13.4	16.75	13.75
				2	815	23.8	17.0		
	Y*(8,L)C*A12	14.5	FC/MC/PC32A	1	550	17.5	13.0	16.50	13.25
				2	775	23.0	17.3		
	Y*(8,L)C*A12	14.5	HD36	1	595	17.5	12.6	16.50	13.25
				2	805	23.0	15.7		
	Y*(8,L)C*B12	17.5	FC/MC/PC35B	1	515	17.4	12.7	16.50	13.50
				2	760	23.0	17.3		
	Y*(8,L)C*B12	17.5	FC/MC/PC43B	1	515	17.5	12.8	16.75	13.75
				2	760	23.4	17.5		
	Y*(8,L)C*B12	17.5	HD36	1	515	17.0	11.9	16.00	13.25
				2	760	22.6	15.5		
	Y*9C*B12	17.5	FC/MC/PC35B	1	550	17.5	12.7	16.50	13.25
				2	815	23.2	16.5		
	Y*9C*B12	17.5	FC/MC/PC43B	1	550	17.8	12.9	17.00	13.75
				2	800	23.6	16.7		
	Y*9C*B12	17.5	HD36	1	590	17.5	12.6	16.50	13.50
				2	815	23.0	15.7		
CZH03611(C)	T*(8,L)C*A12	14.5	FC/MC/PC37A	1	730	24.2	17.7	16.75	13.00
				2	1150	34.2	26.6		
	T*(8,L)C*B12	17.5	FC/MC/PC35B	1	745	24.6	16.7	17.00	12.50
				2	1220	35.0	24.3		
	T*(8,L)C*B12	17.5	FC/MC/PC43B	1	860	24.8	16.9	17.25	12.75
				2	1275	35.4	27.8		
	T*(8,L)C*B12	17.5	HD48	1	750	24.8	17.0	17.25	13.25
				2	1210	35.8	25.1		
	T*(8,L)C*C16	21.0	FC/MC/PC35C	1	815	25.0	17.5	17.25	13.25
				2	1235	35.4	24.7		
	T*(8,L)C*C16	21.0	FC/MC/PC43C	1	770	25.2	17.6	17.50	13.50
				2	1190	35.8	27.4		
	T*(8,L)C*C16	21.0	FC/MC/PC48C	1	810	25.6	17.9	17.75	13.75
				2	1210	36.4	28.0		
	T*(8,L)C*C16	21.0	FC/PC60C	1	710	25.1	17.5	17.50	13.50
				2	1185	36.0	25.0		

For Notes See Page 17.

COOLING CAPACITY - With High Efficiency Motor Furnaces (Continued)

UNIT MODEL	FURNACE		COIL MODEL[1]	COOLING					
	MODEL	WIDTH		STAGE	RATED CFM	NET MBH TOTAL	NET MBH SENS.	SEER	EER
18 SEER AC WITH HIGH EFFICIENCY MOTOR FURNACES[2]									
CZH03611(C)	T*(8,L)C*C16	21.0	HD48	1	810	25.4	17.7	17.75	13.75
				2	1210	36.0	25.3		
	T*(8,L)C*C16	21.0	UC48C	1	810	25.0	17.7	17.50	13.50
				2	1210	35.6	25.3		
	T*(8,L)C*C20	21.0	FC/MC/PC35C	1	960	25.8	19.2	17.25	13.25
				2	1170	35.2	24.3		
	T*(8,L)C*C20	21.0	FC/MC/PC43C	1	745	24.8	17.0	17.50	13.50
				2	1190	35.8	27.4		
	T*(8,L)C*C20	21.0	FC/MC/PC48C	1	720	24.8	16.9	17.50	13.75
				2	1155	36.2	27.4		
	T*(8,L)C*C20	21.0	FC/PC60C	1	800	25.5	18.1	17.75	13.50
				2	1215	36.4	25.6		
	T*(8,L)C*C20	21.0	HD48	1	720	24.8	16.7	17.50	13.75
				2	1155	35.8	24.9		
	T*(8,L)C*C20	21.0	UC48C	1	720	24.4	16.7	17.25	13.50
				2	1155	35.4	24.7		
	T*(8,L)V*A12	14.5	FC/MC/PC37A	1	730	24.2	17.7	16.75	13.00
				2	1150	34.2	26.6		
	T*(8,L)V*B12	17.5	FC/MC/PC43B	1	860	24.8	16.9	17.25	12.75
				2	1275	35.4	27.8		
	T*(8,L)V*C16	21.0	FC/MC/PC43C	1	770	25.2	17.6	17.50	13.50
				2	1190	35.8	27.4		
	T*(8,L)V*C16	21.0	FC/MC/PC48C	1	810	25.6	17.9	17.75	13.75
				2	1210	36.4	28.0		
	T*(8,L)V*C16	21.0	FC/PC60C	1	710	25.1	17.5	17.50	13.50
				2	1185	36.0	25.0		
	T*(8,L)V*C16	21.0	UC48C	1	810	25.0	17.7	17.50	13.50
				2	1210	35.6	25.3		
	T*(8,L)V*C20	21.0	FC/MC/PC43C	1	745	24.8	17.0	17.50	13.50
				2	1190	35.8	27.4		
	T*(8,L)V*C20	21.0	FC/MC/PC48C	1	720	24.8	16.9	17.50	13.75
				2	1155	36.2	27.4		
	T*(8,L)V*C20	21.0	FC/PC60C	1	800	25.5	18.1	17.75	13.50
				2	1215	36.4	25.6		
	T*(8,L)V*C20	21.0	UC48C	1	720	24.4	16.7	17.25	13.50
				2	1155	35.4	24.7		
	T*(8,L)X*A12	14.5	FC/MC/PC37A	1	810	24.2	16.9	16.75	13.00
				2	1290	34.2	24.4		
	T*(8,L)X*B12	17.5	FC/MC/PC43B	1	835	24.8	17.5	17.25	12.75
				2	1300	35.4	25.3		
	T*(8,L)X*C16	21.0	FC/MC/PC43C	1	615	23.6	15.3	17.00	13.75
				2	1175	35.8	25.1		
	T*(8,L)X*C16	21.0	FC/MC/PC48C	1	645	24.2	15.9	17.25	13.75
				2	1185	36.4	25.7		
	T*(8,L)X*C16	21.0	FC/PC60C	1	650	24.5	16.5	17.50	13.75
				2	1190	36.4	25.6		
	T*(8,L)X*C16	21.0	UC48C	1	645	23.4	15.4	16.75	13.50
				2	1185	35.6	25.3		

For Notes See Page 17.

COOLING CAPACITY - With High Efficiency Motor Furnaces (Continued)

UNIT MODEL	FURNACE		COIL MODEL[1]	COOLING					
	MODEL	WIDTH		STAGE	RATED CFM	NET MBH		SEER	EER
						TOTAL	SENS.		
18 SEER AC WITH HIGH EFFICIENCY MOTOR FURNACES[2]									
CZH03611(C)	T*(8,L)X*C20	21.0	FC/MC/PC43C	1	780	24.8	17.2	17.50	13.50
				2	1250	35.8	25.6		
	T*(8,L)X*C20	21.0	FC/MC/PC48C	1	810	24.8	17.4	17.50	13.75
				2	1270	36.2	26.0		
	T*(8,L)X*C20	21.0	FC/PC60C	1	815	25.7	18.3	18.00	13.75
				2	1275	36.8	26.4		
	T*(8,L)X*C20	21.0	UC48C	1	810	24.4	17.2	17.25	13.50
				2	1270	35.4	25.4		
	T*9(C,V)*B12	17.5	FC/MC/PC43B	1	815	25.0	17.5	17.00	12.75
				2	1200	35.4	24.9		
	T*9(C,V)*C16	21.0	FC/MC/PC43C	1	815	25.2	17.5	17.25	13.00
				2	1240	35.6	25.1		
	T*9(C,V)*C16	21.0	FC/MC/PC48C	1	780	25.6	17.9	17.75	13.50
				2	1195	36.2	25.5		
	T*9(C,V)*C16	21.0	FC/PC60C	1	810	25.5	18.1	17.50	13.00
				2	1235	36.2	25.6		
	T*9(C,V)*C16	21.0	UC48C	1	780	25.0	17.7	17.50	13.25
				2	1195	35.6	25.1		
	T*9(C,V)*C20	21.0	FC/MC/PC43C	1	780	24.8	16.9	17.25	13.25
				2	1200	35.8	25.1		
	T*9(C,V)*C20	21.0	FC/MC/PC48C	1	745	24.8	17.1	17.50	13.25
				2	1330	36.6	26.5		
	T*9(C,V)*C20	21.0	FC/PC60C	1	770	25.3	17.7	17.50	13.00
				2	1330	36.6	26.4		
	T*9(C,V)*C20	21.0	UC48C	1	755	24.6	17.1	17.25	13.00
				2	1330	35.8	25.9		
	T*9(C,V)*D20	24.5	FC/MC/PC60D	1	830	25.7	18.3	17.75	13.25
				2	1225	36.4	25.8		
	T*9X*B12	17.5	FC/MC/PC43B	1	775	24.8	17.2	17.00	12.75
				2	1270	35.4	25.6		
	T*9X*C16	21.0	FC/MC/PC43C	1	695	24.4	16.3	17.25	13.00
				2	1260	35.6	25.2		
	T*9X*C16	21.0	FC/MC/PC48C	1	720	24.8	16.8	17.75	13.25
				2	1280	36.2	26.1		
	T*9X*C16	21.0	FC/PC60C	1	725	25.1	17.4	18.00	13.50
				2	1315	36.8	26.6		
	T*9X*C16	21.0	UC48C	1	720	24.0	16.4	17.25	13.00
				2	1280	35.6	25.7		
	T*9X*C20	21.0	FC/MC/PC43C	1	810	24.8	17.3	17.25	13.25
				2	1185	35.8	25.1		
	T*9X*C20	21.0	FC/MC/PC48C	1	830	24.8	17.6	17.50	13.25
				2	1205	36.6	25.8		
	T*9X*C20	21.0	FC/PC60C	1	835	25.7	18.5	18.00	13.50
				2	1240	36.6	26.0		
	T*9X*C20	21.0	UC48C	1	830	24.6	17.5	17.25	13.00
				2	1205	35.8	25.4		
	T*9X*D20	24.5	FC/MC/PC48D	1	870	25.6	18.4	18.00	13.75
				2	1240	36.8	26.0		

For Notes See Page 17.

COOLING CAPACITY - With High Efficiency Motor Furnaces (Continued)

UNIT MODEL	FURNACE		COIL MODEL[1]	COOLING					
	MODEL	WIDTH		STAGE	RATED CFM	NET MBH TOTAL	NET MBH SENS.	SEER	EER
18 SEER AC WITH HIGH EFFICIENCY MOTOR FURNACES[2]									
CZH03611(C)	T*9X*D20	24.5	FC/MC/PC60D	1	945	26.3	19.6	18.50	13.75
				2	1310	37.0	26.8		
	T*9X*D20	24.5	FC/MC62D	1	830	25.4	18.0	17.75	13.75
				2	1225	36.8	26.0		
	T*9X*D20	24.5	FC64D	1	830	26.4	18.9	18.25	14.00
				2	1225	36.0	26.0		
	T*9X*D20	24.5	UC48D	1	870	24.8	18.0	17.50	13.25
				2	1240	36.0	25.8		
	Y*(8,L)C*A12	14.5	FC/MC/PC37A	1	730	24.2	17.7	16.75	13.00
				2	1150	34.2	26.6		
	Y*(8,L)C*B12	17.5	FC/MC/PC43B	1	860	24.8	16.9	17.25	12.75
				2	1275	35.4	27.8		
	Y*(8,L)C*C16	21.0	FC/MC/PC43C	1	770	25.2	17.6	17.50	13.50
				2	1190	35.8	27.4		
	Y*(8,L)C*C16	21.0	FC/MC/PC48C	1	810	25.6	17.9	17.75	13.75
				2	1210	36.4	28.0		
	Y*(8,L)C*C16	21.0	FC/PC60C	1	710	25.1	17.5	17.50	13.50
				2	1185	36.0	25.0		
	Y*(8,L)C*C16	21.0	UC48C	1	810	25.0	17.7	17.50	13.50
				2	1210	35.6	25.3		
	Y*(8,L)C*C20	21.0	FC/MC/PC43C	1	745	24.8	17.0	17.50	13.50
				2	1190	35.8	27.4		
	Y*(8,L)C*C20	21.0	FC/MC/PC48C	1	720	24.8	16.9	17.50	13.75
				2	1155	36.2	27.4		
	Y*(8,L)C*C20	21.0	FC/PC60C	1	800	25.5	18.1	17.75	13.50
				2	1215	36.4	25.6		
	Y*(8,L)C*C20	21.0	UC48C	1	720	24.4	16.7	17.25	13.50
				2	1155	35.4	24.7		
	Y*9C*B12	17.5	FC/MC/PC43B	1	815	25.0	17.5	17.00	12.75
				2	1200	35.4	24.9		
	Y*9C*C16	21.0	FC/MC/PC43C	1	815	25.2	17.5	17.25	13.00
				2	1240	35.6	25.1		
	Y*9C*C16	21.0	FC/MC/PC48C	1	780	25.6	17.9	17.75	13.50
				2	1195	36.2	25.5		
	Y*9C*C16	21.0	FC/PC60C	1	810	25.5	18.1	17.50	13.00
				2	1235	36.2	25.6		
	Y*9C*C16	21.0	UC48C	1	780	25.0	17.7	17.50	13.25
				2	1195	35.6	25.1		
	Y*9C*C20	21.0	FC/MC/PC43C	1	780	24.8	16.9	17.25	13.25
				2	1200	35.8	25.1		
	Y*9C*C20	21.0	FC/MC/PC48C	1	745	24.8	17.1	17.50	13.25
				2	1330	36.6	26.5		
	Y*9C*C20	21.0	FC/PC60C	1	770	25.3	17.7	17.50	13.00
				2	1330	36.6	26.4		
	Y*9C*C20	21.0	UC48C	1	755	24.6	17.1	17.25	13.00
				2	1330	35.8	25.9		
	Y*9C*D20	24.5	FC/MC/PC60D	1	830	25.7	18.3	17.75	13.25
				2	1225	36.4	25.8		
	Y*9C*D20	24.5	FC64D	1	835	26.4	18.9	18.25	14.00
				2	1235	36.0	26.0		

For Notes See Page 17.

COOLING CAPACITY - With High Efficiency Motor Furnaces (Continued)

UNIT MODEL	FURNACE		COIL MODEL[1]	COOLING					
	MODEL	WIDTH		STAGE	RATED CFM	NET MBH		SEER	EER
						TOTAL	SENS.		
18 SEER AC WITH HIGH EFFICIENCY MOTOR FURNACES[2]									
CZH04811(C)	T*(8,L)C*C16	21.0	FC/MC/PC48C	1	1035	33.4	24.6	16.50	11.75
				2	1615	45.5	37.2		
	T*(8,L)C*C16	21.0	FC/PC60C	1	1025	32.6	23.8	16.25	11.75
				2	1600	44.5	36.2		
	T*(8,L)C*C16	21.0	HD60	1	1035	33.6	24.6	16.75	12.00
				2	1625	45.5	34.6		
	T*(8,L)C*C16	21.0	UC48C	1	1035	31.8	23.4	15.75	11.50
				2	1615	44.0	33.4		
	T*(8,L)C*C16	21.0	UC60C	1	1035	30.0	21.4	15.00	11.25
				2	1570	42.0	31.1		
	T*(8,L)C*C20	21.0	FC/MC/PC48C	1	1080	33.4	24.4	16.25	11.75
				2	1640	45.5	34.4		
	T*(8,L)C*C20	21.0	FC/PC60C	1	1060	32.6	23.8	16.25	12.00
				2	1625	45.0	36.6		
	T*(8,L)C*C20	21.0	HD60	1	1015	33.6	24.6	16.75	12.00
				2	1605	45.5	34.8		
	T*(8,L)C*C20	21.0	UC48C	1	1080	31.8	23.4	15.50	11.50
				2	1640	44.0	33.4		
	T*(8,L)C*C20	21.0	UC60C	1	1015	30.0	21.4	15.00	11.50
				2	1590	42.5	31.3		
	T*(8,L)V*C16	21.0	FC/MC/PC48C	1	1035	33.4	24.6	16.50	11.75
				2	1615	45.5	37.2		
	T*(8,L)V*C16	21.0	FC/PC60C	1	1025	32.6	23.8	16.25	11.75
				2	1600	44.5	36.2		
	T*(8,L)V*C16	21.0	HD60	1	1035	33.6	24.6	16.75	12.00
				2	1625	45.5	34.6		
	T*(8,L)V*C16	21.0	UC48C	1	1035	31.8	23.4	15.75	11.50
				2	1615	44.0	33.4		
	T*(8,L)V*C16	21.0	UC60C	1	1035	30.0	21.4	15.00	11.25
				2	1570	42.0	31.1		
	T*(8,L)V*C20	21.0	FC/MC/PC48C	1	1080	33.4	24.4	16.25	11.75
				2	1640	45.5	34.4		
	T*(8,L)V*C20	21.0	FC/MC62D	1	905	32.8	24.3	16.00	12.30
				2	1410	45.5	34.6		
	T*(8,L)V*C20	21.0	FC/PC60C	1	1060	32.6	23.8	16.25	12.00
				2	1625	45.0	36.6		
	T*(8,L)V*C20	21.0	HD60	1	1015	33.6	24.6	16.75	12.00
				2	1605	45.5	34.8		
	T*(8,L)V*C20	21.0	UC48C	1	1080	31.8	23.4	15.50	11.50
				2	1640	44.0	33.4		
	T*(8,L)V*C20	21.0	UC60C	1	1015	30.0	21.4	15.00	11.50
				2	1590	42.5	31.3		
	T*(8,L)X*C16	21.0	FC/MC/PC48C	1	1115	33.4	25.0	16.00	11.50
				2	1600	45.5	34.4		
	T*(8,L)X*C16	21.0	FC/MC62D	1	1115	33.8	25.1	16.00	11.75
				2	1610	44.5	33.6		
	T*(8,L)X*C16	21.0	FC/PC60C	1	1120	32.6	24.5	15.75	11.50
				2	1605	44.5	33.3		

For Notes See Page 17.

COOLING CAPACITY - With High Efficiency Motor Furnaces (Continued)

UNIT MODEL	FURNACE		COIL MODEL[1]	COOLING					
	MODEL	WIDTH		STAGE	RATED CFM	NET MBH		SEER	EER
						TOTAL	SENS.		
18 SEER AC WITH HIGH EFFICIENCY MOTOR FURNACES[2]									
CZH04811(C)	T*(8,L)X*C16	21.0	FC64D	1	1140	35.6	27.0	17.00	12.75
				2	1360	46.5	34.6		
	T*(8,L)X*C16	21.0	UC48C	1	1115	30.6	22.7	14.50	11.00
				2	1600	42.5	31.4		
	T*(8,L)X*C16	21.0	UC60C	1	1120	30.0	22.2	14.75	11.00
				2	1605	42.0	31.3		
	T*(8,L)X*C20	21.0	FC/MC/PC48C	1	855	31.8	22.5	15.50	11.75
				2	1660	45.5	34.8		
	T*(8,L)X*C20	21.0	FC/MC/PC60D	1	860	31.4	22.3	15.50	11.75
				2	1595	45.0	33.6		
	T*(8,L)X*C20	21.0	FC/MC62D	1	835	31.6	22.3	15.75	12.00
				2	1665	46.0	35.0		
	T*(8,L)X*C20	21.0	FC/PC60C	1	860	31.4	22.3	15.50	11.75
				2	1595	45.0	33.6		
	T*(8,L)X*C20	21.0	FC64D	1	815	33.2	23.4	16.25	13.00
				2	1485	47.5	35.6		
	T*(8,L)X*C20	21.0	UC60C	1	860	29.2	20.5	14.25	11.50
				2	1540	43.0	32.0		
	T*(8,L)X*C20	21.0	UC60D	1	860	29.2	20.5	14.25	11.50
				2	1540	43.0	32.0		
	T*9(C,V)*C16	21.0	FC/MC/PC48C	1	1050	33.4	24.6	16.25	11.75
				2	1590	45.5	34.1		
	T*9(C,V)*C16	21.0	FC/PC60C	1	1050	32.4	23.8	16.00	11.50
				2	1590	44.5	33.6		
	T*9(C,V)*C16	21.0	HD60	1	1050	33.4	24.6	16.25	11.75
				2	1590	45.5	34.6		
	T*9(C,V)*C16	21.0	UC48C	1	1050	31.8	23.8	15.50	11.25
				2	1590	43.5	33.0		
	T*9(C,V)*C16	21.0	UC60C	1	1050	30.0	21.2	14.75	11.00
				2	1570	42.0	31.1		
	T*9(C,V)*C20	21.0	FC/MC/PC48C	1	1055	33.4	24.6	16.50	11.75
				2	1655	45.5	34.1		
	T*9(C,V)*C20	21.0	FC/PC60C	1	1055	32.6	23.8	16.00	11.50
				2	1655	44.5	33.6		
	T*9(C,V)*C20	21.0	HD60	1	1055	33.6	24.6	16.50	11.75
				2	1655	45.5	34.6		
	T*9(C,V)*C20	21.0	UC48C	1	1055	31.8	23.8	15.75	11.25
				2	1630	43.5	33.0		
	T*9(C,V)*C20	21.0	UC60C	1	1055	30.0	21.4	14.75	11.00
				2	1570	42.0	31.1		
	T*9(C,V)*D20	24.5	FC/MC/PC48D	1	1060	33.0	24.2	16.25	11.50
				2	1645	45.0	34.0		
	T*9(C,V)*D20	24.5	FC/MC/PC60D	1	1070	32.4	23.8	16.00	11.75
				2	1615	44.5	33.8		
	T*9(C,V)*D20	24.5	FC/MC62D	1	1085	33.0	24.4	16.00	11.75
				2	1630	45.0	34.0		
	T*9(C,V)*D20	24.5	HD60	1	1070	33.6	24.6	16.50	11.75
				2	1615	45.5	34.6		

For Notes See Page 17.

COOLING CAPACITY - With High Efficiency Motor Furnaces (Continued)

UNIT MODEL	FURNACE		COIL MODEL[1]	COOLING					
	MODEL	WIDTH		STAGE	RATED CFM	NET MBH		SEER	EER
						TOTAL	SENS.		
18 SEER AC WITH HIGH EFFICIENCY MOTOR FURNACES[2]									
CZH04811(C)	T*9(C,V)*D20	24.5	UC48D	1	1060	29.8	22.0	14.75	11.00
				2	1570	42.0	31.1		
	T*9(C,V)*D20	24.5	UC60D	1	1070	30.0	21.2	14.75	11.00
				2	1570	42.0	31.1		
	T*9X*C16	21.0	FC/MC62D	1	1110	34.2	25.3	16.00	12.30
				2	1460	45.5	34.6		
	T*9X*C16	21.0	FC64D	1	1110	35.4	26.6	16.75	12.50
				2	1460	47.5	35.2		
	T*9X*C20	21.0	FC/MC/PC48C	1	1215	33.4	25.4	16.00	11.75
				2	1615	45.5	34.2		
	T*9X*C20	21.0	FC/MC62D	1	1220	34.2	26.1	16.00	11.75
				2	1595	45.5	34.4		
	T*9X*C20	21.0	FC/PC60C	1	1215	31.4	25.7	14.50	11.00
				2	1625	43.5	34.2		
	T*9X*C20	21.0	FC64D	1	835	33.2	23.6	16.25	13.00
				2	1460	47.5	35.4		
	T*9X*C20	21.0	UC48C	1	1215	31.2	23.3	14.25	11.00
				2	1615	43.0	32.0		
	T*9X*D20	24.5	FC/MC/PC48D	1	1250	33.0	25.4	16.00	11.50
				2	1635	45.0	34.0		
	T*9X*D20	24.5	FC/MC/PC60D	1	1320	32.4	25.1	16.00	11.75
				2	1490	44.5	32.9		
	T*9X*D20	24.5	FC/MC62D	1	1240	33.0	25.2	16.25	11.50
				2	1610	45.0	34.0		
	T*9X*D20	24.5	FC64D	1	830	33.2	23.6	16.50	12.75
				2	1425	47.0	35.2		
	T*9X*D20	24.5	UC48D	1	1250	29.8	22.3	14.75	11.00
				2	1635	42.0	31.5		
	T*9X*D20	24.5	UC60D	1	1320	30.0	22.6	14.75	11.00
				2	1490	42.0	31.1		
	Y*(8,L)C*C16	21.0	FC/MC/PC48C	1	1035	33.4	24.6	16.50	11.75
				2	1615	45.5	37.2		
	Y*(8,L)C*C16	21.0	FC/PC60C	1	1025	32.6	23.8	16.25	11.75
				2	1600	44.5	36.2		
	Y*(8,L)C*C16	21.0	HD60	1	1035	33.6	24.6	16.75	12.00
				2	1625	45.5	34.6		
	Y*(8,L)C*C16	21.0	UC48C	1	1035	31.8	23.4	15.75	11.50
				2	1615	44.0	33.4		
	Y*(8,L)C*C16	21.0	UC60C	1	1035	30.0	21.4	15.00	11.25
				2	1570	42.0	31.1		
	Y*(8,L)C*C20	21.0	FC/MC/PC48C	1	1080	33.4	24.4	16.25	11.75
				2	1640	45.5	34.4		
	Y*(8,L)C*C20	21.0	FC/MC62D	1	905	32.8	24.3	16.00	12.30
				2	1410	45.5	34.6		
	Y*(8,L)C*C20	21.0	FC/PC60C	1	1060	32.6	23.8	16.25	12.00
				2	1625	45.0	36.6		
	Y*(8,L)C*C20	21.0	HD60	1	1015	33.6	24.6	16.75	12.00
				2	1605	45.5	34.8		

For Notes See Page 17.

COOLING CAPACITY - With High Efficiency Motor Furnaces (Continued)

UNIT MODEL	FURNACE		COIL MODEL[1]	COOLING					
	MODEL	WIDTH		STAGE	RATED CFM	NET MBH		SEER	EER
						TOTAL	SENS.		
18 SEER AC WITH HIGH EFFICIENCY MOTOR FURNACES[2]									
CZH04811(C)	Y*(8,L)C*C20	21.0	UC48C	1	1080	31.8	23.4	15.50	11.50
				2	1640	44.0	33.4		
	Y*(8,L)C*C20	21.0	UC60C	1	1015	30.0	21.4	15.00	11.50
				2	1590	42.5	31.3		
	Y*9C*C16	21.0	FC/MC/PC48C	1	1050	33.4	24.6	16.25	11.75
				2	1590	45.5	34.1		
	Y*9C*C16	21.0	FC/PC60C	1	1050	32.4	23.8	16.00	11.50
				2	1590	44.5	33.6		
	Y*9C*C16	21.0	FC64D	1	1040	35.0	26.2	16.50	12.30
				2	1590	47.5	36.8		
	Y*9C*C16	21.0	HD60	1	1050	33.4	24.6	16.25	11.75
				2	1590	45.5	34.6		
	Y*9C*C16	21.0	UC48C	1	1050	31.8	23.8	15.50	11.25
				2	1590	43.5	33.0		
	Y*9C*C16	21.0	UC60C	1	1050	30.0	21.2	14.75	11.00
				2	1570	42.0	31.1		
	Y*9C*C20	21.0	FC/MC/PC48C	1	1055	33.4	24.6	16.50	11.75
				2	1655	45.5	34.1		
	Y*9C*C20	21.0	FC/PC60C	1	1055	32.6	23.8	16.00	11.50
				2	1655	44.5	33.6		
	Y*9C*C20	21.0	FC64D	1	880	33.6	24.0	16.25	12.30
				2	1445	47.0	34.8		
	Y*9C*C20	21.0	HD60	1	1055	33.6	24.6	16.50	11.75
				2	1655	45.5	34.6		
	Y*9C*C20	21.0	UC48C	1	1055	31.8	23.8	15.75	11.25
				2	1630	43.5	33.0		
	Y*9C*C20	21.0	UC60C	1	1055	30.0	21.4	14.75	11.00
				2	1570	42.0	31.1		
	Y*9C*D20	24.5	FC/MC/PC48D	1	1060	33.0	24.2	16.25	11.50
				2	1645	45.0	34.0		
	Y*9C*D20	24.5	FC/MC/PC60D	1	1070	32.4	23.8	16.00	11.75
				2	1615	44.5	33.8		
	Y*9C*D20	24.5	FC/MC62D	1	1085	33.0	24.4	16.00	11.75
				2	1630	45.0	34.0		
	Y*9C*D20	24.5	FC64D	1	945	34.2	24.8	16.50	12.50
				2	1455	47.0	35.0		
	Y*9C*D20	24.5	HD60	1	1070	33.6	24.6	16.50	11.75
				2	1615	45.5	34.6		
	Y*9C*D20	24.5	UC48D	1	1060	29.8	22.0	14.75	11.00
				2	1570	42.0	31.1		
	Y*9C*D20	24.5	UC60D	1	1070	30.0	21.2	14.75	11.00
				2	1570	42.0	31.1		

For Notes See Page 17.

COOLING CAPACITY - With High Efficiency Motor Furnaces (Continued)

UNIT MODEL	FURNACE		COIL MODEL[1]	COOLING					
	MODEL	WIDTH		STAGE	RATED CFM	NET MBH		SEER	EER
						TOTAL	SENS.		
18 SEER AC WITH HIGH EFFICIENCY MOTOR FURNACES[2]									
CZH06011(C)	T*(8,L)C*C20	21.0	FC/PC60C	1	1060	40.0	25.8	15.25	11.25
				2	1600	55.0	36.8		
	T*(8,L)C*C20	21.0	UC60C	1	1015	38.5	24.6	14.50	11.00
				2	1605	53.5	34.6		
	T*(8,L)C*C20	21.0	HD60	1	1015	40.5	25.8	15.25	11.50
				2	1605	55.5	36.1		
	T*(8,L)V*C16	21.0	FC64D	1	1025	42.5	28.4	16.00	12.30
				2	1635	58.5	40.5		
	T*(8,L)V*C20	21.0	FC/PC60C	1	1060	40.0	25.8	15.25	11.25
				2	1600	55.0	36.8		
	T*(8,L)V*C20	21.0	UC60C	1	1015	38.5	24.6	14.50	11.00
				2	1605	53.5	34.6		
	T*(8,L)X*C16	21.0	FC/PC60C	1	1120	41.0	27.1	15.00	11.50
				2	1605	55.5	37.3		
	T*(8,L)X*C16	21.0	FC64D	1	1115	42.5	28.4	16.00	12.30
				2	1610	58.5	40.5		
	T*(8,L)X*C16	21.0	UC60C	1	1120	39.5	26.3	14.75	11.25
				2	1605	54.5	36.5		
	T*(8,L)X*C20	21.0	FC/MC/PC60D	1	860	39.0	24.5	15.00	11.75
				2	1690	56.5	37.3		
	T*(8,L)X*C20	21.0	FC/MC62D	1	835	38.5	24.3	14.75	11.75
				2	1665	57.0	39.2		
	T*(8,L)X*C20	21.0	FC/PC60C	1	860	39.0	24.5	15.00	11.75
				2	1690	56.5	37.3		
	T*(8,L)X*C20	21.0	FC64D	1	835	40.0	25.6	15.25	12.50
				2	1665	59.0	41.0		
	T*(8,L)X*C20	21.0	UC60C	1	860	38.0	23.5	14.25	11.50
				2	1690	55.5	36.5		
	T*(8,L)X*C20	21.0	UC60D	1	860	38.0	23.5	14.50	11.50
				2	1690	55.5	36.5		
	T*9(C,V)*C20	21.0	FC/PC60C	1	1055	40.0	25.8	15.00	11.00
				2	1655	54.5	35.9		
	T*9(C,V)*C20	21.0	UC60C	1	1055	38.5	24.6	14.25	10.75
				2	1655	53.0	34.4		
	T*9(C,V)*D20	24.5	FC/MC62D	1	1085	40.5	26.3	15.00	11.25
				2	1630	55.0	36.3		
	T*9(C,V)*D20	24.5	UC60D	1	1070	38.5	25.0	14.50	10.75
				2	1615	53.5	34.6		
	T*9X*C16	21.0	FC64D	1	1085	42.5	28.4	15.75	12.30
				2	1550	58.5	40.5		
	T*9X*C20	21.0	FC/MC/PC60D	1	1295	42.0	28.7	15.50	11.75
				2	1645	56.0	37.7		
	T*9X*C20	21.0	FC/MC62D	1	1220	42.0	28.5	15.25	11.75
				2	1595	56.5	38.2		
	T*9X*C20	21.0	FC/PC60C	1	1215	40.0	27.5	14.50	11.00
				2	1625	54.5	37.1		
	T*9X*C20	21.0	FC64D	1	1220	43.5	29.8	16.00	12.30
				2	1595	58.5	40.0		

For Notes See Page 17.

COOLING CAPACITY - With High Efficiency Motor Furnaces (Continued)

UNIT MODEL	FURNACE		COIL MODEL[1]	COOLING					
	MODEL	WIDTH		STAGE	RATED CFM	NET MBH		SEER	EER
						TOTAL	SENS.		
18 SEER AC WITH HIGH EFFICIENCY MOTOR FURNACES[2]									
CZH06011(C)	T*9X*C20	21.0	UC60C	1	1295	41.0	27.7	14.75	11.50
				2	1645	55.0	37.1		
	T*9X*C20	21.0	UC60D	1	1295	41.0	27.7	15.00	11.50
				2	1645	55.0	37.1		
	T*9X*D20	24.5	FC/MC/PC60D	1	1320	42.0	29.1	15.50	11.75
				2	1730	56.0	38.4		
	T*9X*D20	24.5	FC/MC62D	1	1240	40.5	27.3	15.00	11.25
				2	1645	55.0	37.6		
	T*9X*D20	24.5	FC64D	1	1240	44.0	30.2	16.00	12.30
				2	1645	59.0	40.5		
	T*9X*D20	24.5	UC60D	1	1320	38.5	26.2	14.50	10.75
				2	1730	53.5	36.8		
	Y*(8,L)C*C16	21.0	FC64D	1	1025	42.5	28.4	16.00	12.30
				2	1635	58.5	40.5		
	Y*(8,L)C*C20	21.0	FC/PC60C	1	1060	40.0	25.8	15.25	11.25
				2	1600	55.0	36.8		
	Y*(8,L)C*C20	21.0	UC60C	1	1015	38.5	24.6	14.50	11.00
				2	1605	53.5	34.6		
	Y*9C*C16	21.0	FC64D	1	1040	42.5	28.4	15.75	12.00
				2	1590	58.5	40.5		
	Y*9C*C20	21.0	FC/PC60C	1	1055	40.0	25.8	15.00	11.00
				2	1655	54.5	35.9		
	Y*9C*C20	21.0	FC64D	1	1040	42.0	27.8	15.50	12.00
				2	1655	58.5	40.5		
	Y*9C*C20	21.0	UC60C	1	1055	38.5	24.6	14.25	10.75
				2	1655	53.0	34.4		
	Y*9C*D20	24.5	FC/MC62D	1	1085	40.5	26.3	15.00	11.25
				2	1630	55.0	36.3		
	Y*9C*D20	24.5	FC64D	1	1085	42.5	28.4	15.75	12.00
				2	1630	58.5	40.5		
	Y*9C*D20	24.5	UC60D	1	1070	38.5	25.0	14.50	10.75
				2	1615	53.5	34.6		

1. MC coils available with a factory installed horizontal drain pan. See price pages for specific model number.
2. High Efficiency Motor Furnaces have B.O.D (Blower on Delay) standard.

PSC furnaces, such as the TG8S, TGLS, and TG9S, use Coil Only Ratings.

ACCESSORIES

Start Assist Kit (S1-2SA067*) - Provides increased starting torque for areas with low voltage. See Hard Start Kit Accessory Installation Manual for Hard Start Kit part number for each model.

TXV Kits - S1-1TVM series thermal expansion valves precisely meter refrigerant for optimum performance over a wide range of conditions. See System Charge table for TXV part number for each model.

Dehumidistat (S1-2HU16700124) - Provides increased dehumidification when matched with variable speed furnace or air handler.

Thermostats - Compatible thermostat controls are available through accessory sourcing. For optimum performance, these outdoor units are fully compatiable with the **Residential Touch Screen Communicating Control S1-TTSCC01.**

SOUND POWER RATINGS

UNIT MODEL	(dBA)
024	71
036	73
048	72
060	74

Rated in accordance with ARI Standard 270-1995.

TYPICAL INSTALLATION

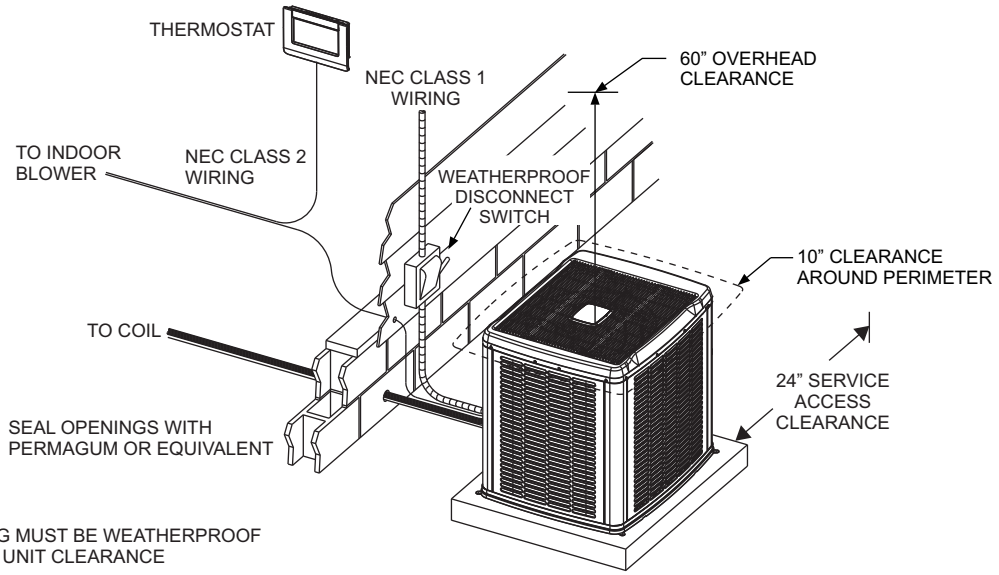

NOTES:
ALL OUTDOOR WIRING MUST BE WEATHERPROOF
MINIMUM 24" UNIT TO UNIT CLEARANCE

COOLING PERFORMANCE DATA - LOW CFM 1-STAGE OPERATION

OUTDOOR UNIT MODEL NO.		CZH02411(C)														
INDOOR COIL MODEL NO.		FC48D + MV12D														
CONDENSER ENTERING AIR TEMPERATURE	ID CFM	600					650					700				
	ID DB (°F)	80	80	75	80	80	80	80	75	80	80	80	80	75	80	80
	ID WB (°F)	57	62	62	67	72	57	62	62	67	72	57	62	62	67	72
65	T.C.	18.6	19.9	18.9	21.7	23.9	19.0	19.9	19.1	21.8	24.4	19.4	20.0	19.3	22.0	24.9
	S.C.	18.6	17.5	14.9	14.8	11.7	19.0	18.5	15.6	15.5	12.1	19.4	19.4	16.2	16.2	12.5
	K.W.	0.76	0.75	0.76	0.74	0.74	0.75	0.75	0.75	0.73	0.74	0.75	0.75	0.75	0.73	0.74
75	T.C.	17.8	18.8	18.0	20.6	22.8	18.3	18.9	18.3	20.9	23.2	18.7	19.1	18.5	21.1	23.6
	S.C.	17.8	17.1	14.5	14.4	11.3	18.3	17.9	15.1	15.1	11.8	18.7	18.6	15.8	15.9	12.2
	K.W.	0.93	0.92	0.93	0.91	0.90	0.92	0.92	0.92	0.90	0.90	0.91	0.91	0.92	0.90	0.90
85	T.C.	17.1	17.6	17.1	19.5	21.6	17.5	17.9	17.4	19.9	22.0	17.9	18.2	17.7	20.2	22.3
	S.C.	17.1	16.8	14.0	14.0	10.9	17.5	17.3	14.7	14.8	11.4	17.9	17.9	15.4	15.5	11.9
	K.W.	1.09	1.09	1.09	1.08	1.06	1.08	1.08	1.09	1.07	1.06	1.07	1.08	1.08	1.06	1.05
95	T.C.	16.4	16.5	16.2	18.5	20.5	16.8	16.9	16.6	18.9	20.8	17.1	17.2	16.9	19.4	21.0
	S.C.	16.4	16.4	13.6	13.7	10.5	16.8	16.8	14.3	14.4	11.1	17.1	17.2	15.0	15.1	11.7
	K.W.	1.26	1.26	1.26	1.24	1.22	1.24	1.25	1.25	1.24	1.22	1.24	1.24	1.25	1.23	1.21
105	T.C.	15.3	15.4	14.9	17.0	19.0	15.7	15.8	15.2	17.3	19.1	16.0	16.2	15.5	17.7	19.3
	S.C.	15.3	15.2	13.0	13.2	10.1	15.7	15.6	13.6	13.9	10.5	16.0	16.0	14.3	14.5	11.0
	K.W.	1.48	1.49	1.49	1.47	1.45	1.47	1.48	1.48	1.47	1.45	1.46	1.47	1.48	1.46	1.45
115	T.C.	14.2	14.3	13.6	15.5	17.5	14.6	14.7	13.9	15.8	17.6	15.0	15.1	14.1	16.1	17.7
	S.C.	14.2	14.1	12.4	12.8	9.6	14.6	14.5	13.0	13.4	10.0	15.0	14.9	13.5	13.9	10.4
	K.W.	1.70	1.71	1.71	1.70	1.68	1.69	1.70	1.70	1.69	1.67	1.68	1.69	1.70	1.68	1.67
125	T.C.	13.1	13.2	12.3	14.0	15.9	13.5	13.6	12.5	14.3	16.0	13.9	14.0	12.7	14.5	16.1
	S.C.	13.1	13.0	11.8	12.3	9.2	13.5	13.4	12.3	12.9	9.5	13.9	13.8	12.7	13.4	9.7
	K.W.	1.92	1.93	1.93	1.92	1.90	1.91	1.92	1.93	1.91	1.90	1.91	1.91	1.92	1.91	1.90

NOTE: ALL CAPACITIES INCLUDE INDOOR FAN HEAT. KW VALUES ARE FOR THE SYSTEM (OUTDOOR + INDOOR).

Multipliers for determining the performance with other indoor sections.

NOTE: For dry bulb temperatures different than those listed (between 73-87 °F), sensible capacity increases by 1060 BTUH per 1000 CFM per degree above the listed temperature and decreases by 1060 BTUH per 1000 CFM per degree below the listed temperature.

LOW CFM

Air Handler	Coil	T.C.	S.C.	KW
–	FC/MC/PC48	0.95	0.93	1.12
AHE24B	–	0.95	0.89	1.01
AHE30B	–	0.95	0.89	1.01
AHX30	–	0.93	0.88	1.01
AHX36	–	0.92	0.85	1.06
AV*36	–	0.93	0.85	1.00
MV12B	FC/MC35B	0.96	0.97	1.01
MV12B	FC/MC43B	0.98	0.98	1.02
MV12D	FC/MC48D	1.00	1.00	1.00

Furnaces	Coil	T.C.	S.C.	KW
T*(8,L)C*A12	FC/MC/PC32A	0.93	0.91	1.01
T*(8,L)C*A12	FC/MC/PC37A	0.95	0.93	1.02
T*(8,L)C*A12	HD36	0.93	0.88	1.01
T*(8,L)C*B12	FC/MC/PC35B	0.92	0.89	1.00
T*(8,L)C*B12	FC/MC/PC43B	0.93	0.90	0.99
T*(8,L)C*B12	HD36	0.90	0.83	1.00
T*(8,L)V*A12	FC/MC/PC32A	0.93	0.91	1.01
T*(8,L)V*A12	HD36	0.93	0.88	1.01
T*(8,L)V*B12	FC/MC/PC35B	0.92	0.89	1.00
T*(8,L)V*B12	FC/MC/PC43B	0.93	0.90	0.99
T*(8,L)V*B12	HD36	0.90	0.83	1.00
T*(8,L)X*A12	FC/MC/PC32A	0.93	0.86	1.01
T*(8,L)X*A12	FC/MC/PC37A	0.95	0.94	1.02
T*(8,L)X*B12	FC/MC/PC35B	0.92	0.94	1.00

Furnaces	Coil	T.C.	S.C.	KW
T*(8,L)X*B12	FC/MC/PC43B	0.93	0.94	0.99
T*(8,L)X*B12	HD36	0.90	0.90	1.00
T*(8,L)X*C16	FC/MC/PC35C	0.95	0.94	1.02
T*(8,L)X*C16	FC/MC/PC48C	0.99	1.01	1.01
T*(8,L)X*C16	UC48C	0.94	0.94	1.03
T*(8,L)X*C20	FC/MC/PC35C	0.99	1.04	1.05
T*9V*A10	FC/MC/PC32A	0.95	0.92	1.05
T*9V*A10	FC/MC/PC37A	0.96	0.91	1.04
T*9(C,V)*B12	FC/MC/PC35B	0.93	0.89	0.99
T*9(C,V)*B12	FC/MC/PC43B	0.94	0.90	1.01
T*9(C,V)*B12	HD36	0.93	0.88	1.01
T*9X*A10	FC/MC/PC32A	0.95	0.92	1.04
T*9X*A10	FC/MC/PC37A	0.96	0.93	1.05
T*9X*B12	FC/MC/PC35B	0.93	0.90	0.99
T*9X*C16	FC/MC/PC35C	0.95	0.92	1.02
T*9X*C16	FC/MC/PC43C	0.97	0.96	1.02
T*9X*C16	FC/MC/PC48C	0.98	1.00	1.02
T*9X*C16	UC48C	0.94	0.94	1.02
Y*(8,L)C*A12	FC/MC/PC32A	0.93	0.91	1.01
Y*(8,L)C*A12	HD36	0.93	0.88	1.01
Y*(8,L)C*B12	FC/MC/PC35B	0.92	0.89	1.00
Y*(8,L)C*B12	FC/MC/PC43B	0.93	0.90	0.99
Y*(8,L)C*B12	HD36	0.90	0.83	1.00
Y*9C*B12	FC/MC/PC35B	0.93	0.89	0.99
Y*9C*B12	FC/MC/PC43B	0.94	0.90	1.01
Y*9C*B12	HD36	0.93	0.88	1.01

COOLING PERFORMANCE DATA - HIGH CFM 2-STAGE OPERATION

OUTDOOR UNIT MODEL NO.		CZH02411(C)														
INDOOR COIL MODEL NO.		FC48D + MV12D														
CONDENSER ENTERING AIR TEMPERATURE	ID CFM	750					850					950				
	ID DB (°F)	80	80	75	80	80	80	80	75	80	80	80	80	75	80	80
	ID WB (°F)	57	62	62	67	72	57	62	62	67	72	57	62	62	67	72
65	T.C.	23.1	25.7	25.0	28.6	30.7	24.3	26.0	26.1	28.8	31.1	25.5	26.3	27.1	28.9	31.6
	S.C.	22.6	21.4	17.9	18.3	14.5	23.8	23.1	19.5	19.1	15.3	25.0	24.8	21.0	20.0	16.1
	K.W.	1.12	1.14	1.14	1.16	1.17	1.13	1.14	1.14	1.16	1.18	1.15	1.15	1.15	1.17	1.19
75	T.C.	22.5	24.3	23.9	27.1	29.2	23.5	24.7	24.7	27.4	29.7	24.5	25.1	25.5	27.6	30.1
	S.C.	21.9	20.9	17.5	17.8	14.0	23.0	22.4	18.9	18.7	14.8	24.0	23.8	20.3	19.7	15.5
	K.W.	1.31	1.32	1.32	1.34	1.35	1.31	1.32	1.32	1.34	1.36	1.33	1.33	1.33	1.35	1.37
85	T.C.	21.8	22.9	22.8	25.6	27.7	22.6	23.4	23.4	26.0	28.2	23.4	23.8	23.9	26.4	28.7
	S.C.	21.3	20.4	17.2	17.3	13.5	22.1	21.6	18.4	18.4	14.3	22.9	22.7	19.6	19.4	15.0
	K.W.	1.49	1.50	1.50	1.52	1.53	1.49	1.50	1.50	1.52	1.54	1.51	1.51	1.51	1.54	1.55
95	T.C.	21.2	21.5	21.8	24.0	26.2	21.8	22.1	22.1	24.6	26.7	22.4	22.5	22.3	25.2	27.2
	S.C.	20.6	20.0	16.8	16.8	13.1	21.3	20.9	17.9	18.0	13.7	21.9	21.7	18.9	19.1	14.4
	K.W.	1.67	1.68	1.67	1.70	1.72	1.67	1.68	1.68	1.70	1.72	1.69	1.69	1.69	1.72	1.73
105	T.C.	20.0	20.3	20.4	22.6	24.5	20.6	20.9	20.7	23.0	25.0	21.2	21.4	20.9	23.5	25.5
	S.C.	19.5	19.0	16.2	16.3	12.6	20.1	19.8	17.2	17.3	13.2	20.7	20.5	18.2	18.4	13.8
	K.W.	1.93	1.93	1.93	1.95	1.97	1.93	1.94	1.93	1.96	1.98	1.95	1.95	1.94	1.97	1.99
115	T.C.	19.0	19.2	19.1	21.2	22.9	19.5	19.7	19.3	21.5	23.4	20.0	20.2	19.5	21.8	23.9
	S.C.	18.5	18.1	15.5	15.8	12.0	19.0	18.8	16.6	16.7	12.6	19.6	19.4	17.6	17.6	13.2
	K.W.	2.18	2.18	2.17	2.20	2.23	2.18	2.18	2.18	2.21	2.23	2.20	2.20	2.19	2.22	2.24
125	T.C.	17.9	18.0	17.7	19.8	21.3	18.4	18.5	17.9	20.0	21.8	18.9	19.1	18.0	20.2	22.2
	S.C.	17.4	17.2	14.9	15.3	11.5	17.9	17.8	15.9	16.1	12.1	18.4	18.3	16.9	16.9	12.6
	K.W.	2.42	2.42	2.42	2.45	2.48	2.43	2.43	2.42	2.45	2.48	2.45	2.45	2.44	2.47	2.50

NOTE: ALL CAPACITIES INCLUDE INDOOR FAN HEAT. KW VALUES ARE FOR THE SYSTEM (OUTDOOR + INDOOR).

Multipliers for determining the performance with other indoor sections.

NOTE: For dry bulb temperatures different than those listed (between 73-87 °F), sensible capacity increases by 1060 BTUH per 1000 CFM per degree above the listed temperature and decreases by 1060 BTUH per 1000 CFM per degree below the listed temperature.

HIGH CFM

Air Handlers	Coils	T.C.	S.C.	KW
–	FC/MC/PC48	0.96	1.05	1.11
AHE24B	–	0.96	0.94	1.03
AHE30B	–	0.96	0.94	1.03
AHX30	–	0.98	0.97	1.05
AHX36	–	0.98	0.96	1.08
AV*36	–	0.98	0.92	1.03
MV12B	FC/MC35B	0.96	0.96	1.00
MV12B	FC/MC43B	0.98	0.98	1.01
MV12D	FC/MC48D	1.00	1.00	1.00

Furnaces	Coils	T.C.	S.C.	KW
T*(8,L)C*A12	FC/MC/PC32A	0.93	0.97	1.02
T*(8,L)C*A12	FC/MC/PC37A	0.96	0.93	1.03
T*(8,L)C*A12	HD36	0.93	0.88	1.02
T*(8,L)C*B12	FC/MC/PC35B	0.93	0.97	1.00
T*(8,L)C*B12	FC/MC/PC43B	0.95	0.98	1.00
T*(8,L)C*B12	HD36	0.92	0.87	1.00
T*(8,L)V*A12	FC/MC/PC32A	0.93	0.97	1.02
T*(8,L)V*A12	HD36	0.93	0.88	1.02
T*(8,L)V*B12	FC/MC/PC35B	0.93	0.97	1.00
T*(8,L)V*B12	FC/MC/PC43B	0.95	0.98	1.00
T*(8,L)V*B12	HD36	0.92	0.87	1.00
T*(8,L)X*A12	FC/MC/PC32A	0.93	0.91	1.02
T*(8,L)X*A12	FC/MC/PC37A	0.96	0.95	1.03
T*(8,L)X*B12	FC/MC/PC35B	0.93	0.92	1.00

Furnaces	Coils	T.C.	S.C.	KW
T*(8,L)X*B12	FC/MC/PC43B	0.95	0.95	1.00
T*(8,L)X*B12	HD36	0.92	0.88	1.00
T*(8,L)X*C16	FC/MC/PC35C	0.98	0.98	1.02
T*(8,L)X*C16	FC/MC/PC48C	1.01	1.01	1.02
T*(8,L)X*C16	UC48C	0.98	0.96	1.03
T*(8,L)X*C20	FC/MC/PC35C	0.98	0.98	1.02
T*9V*A10	FC/MC/PC32A	0.95	0.92	1.06
T*9V*A10	FC/MC/PC37A	0.96	0.93	1.07
T*9(C,V)*B12	FC/MC/PC35B	0.94	0.92	1.03
T*9(C,V)*B12	FC/MC/PC43B	0.96	0.93	1.01
T*9(C,V)*B12	HD36	0.93	0.88	1.00
T*9X*A10	FC/MC/PC32A	0.94	0.90	1.03
T*9X*A10	FC/MC/PC37A	0.95	0.91	1.04
T*9X*B12	FC/MC/PC35B	0.94	0.92	1.03
T*9X*C16	FC/MC/PC35C	0.98	0.93	1.01
T*9X*C16	FC/MC/PC43C	0.98	0.96	1.02
T*9X*C16	FC/MC/PC48C	0.99	0.98	1.01
T*9X*C16	UC48C	0.97	0.95	1.02
Y*(8,L)C*A12	FC/MC/PC32A	0.93	0.97	1.02
Y*(8,L)C*A12	HD36	0.93	0.88	1.02
Y*(8,L)C*B12	FC/MC/PC35B	0.93	0.97	1.00
Y*(8,L)C*B12	FC/MC/PC43B	0.95	0.98	1.00
Y*(8,L)C*B12	HD36	0.92	0.87	1.00
Y*9C*B12	FC/MC/PC35B	0.94	0.92	1.03
Y*9C*B12	FC/MC/PC43B	0.96	0.93	1.01
Y*9C*B12	HD36	0.93	0.88	1.00

COOLING PERFORMANCE DATA - LOW CFM 1-STAGE OPERATION

OUTDOOR UNIT MODEL NO.		CZH03611(C)														
INDOOR COIL MODEL NO.		FC62D + MV12D														
CONDENSER ENTERING AIR TEMPERATURE	ID CFM	750					800					850				
	ID DB (°F)	80	80	75	80	80	80	80	75	80	80	80	80	75	80	80
	ID WB (°F)	57	62	62	67	72	57	62	62	67	72	57	62	62	67	72
65	T.C.	25.4	26.8	27.2	29.7	32.8	25.9	27.0	27.3	30.1	33.0	26.4	27.2	27.5	30.4	33.2
	S.C.	24.8	22.7	19.3	19.2	15.1	25.4	23.6	19.8	19.6	15.6	25.9	24.4	20.3	20.1	16.0
	K.W.	1.00	0.99	0.99	0.96	0.93	0.99	0.98	0.98	0.95	0.92	0.97	0.97	0.97	0.94	0.91
75	T.C.	24.3	25.5	25.7	28.3	31.2	24.9	25.7	25.9	28.6	31.3	25.4	26.0	26.1	28.9	31.5
	S.C.	23.8	22.2	18.7	18.6	14.7	24.4	22.9	19.2	19.1	15.2	24.9	23.6	19.7	19.6	15.6
	K.W.	1.24	1.23	1.23	1.20	1.17	1.22	1.22	1.22	1.19	1.16	1.21	1.21	1.21	1.18	1.16
85	T.C.	23.3	24.2	24.3	26.9	29.5	23.8	24.5	24.5	27.2	29.7	24.3	24.7	24.8	27.5	29.8
	S.C.	22.8	21.6	18.1	18.0	14.3	23.4	22.3	18.7	18.6	14.8	23.9	22.9	19.2	19.1	15.2
	K.W.	1.47	1.47	1.47	1.44	1.41	1.46	1.46	1.46	1.43	1.41	1.45	1.45	1.45	1.42	1.40
95	T.C.	22.2	22.9	22.8	25.4	27.9	22.7	23.2	23.1	25.8	28.0	23.3	23.5	23.4	26.1	28.2
	S.C.	21.8	21.1	17.6	17.5	13.9	22.4	21.6	18.1	18.0	14.4	22.9	22.1	18.6	18.6	14.8
	K.W.	1.71	1.71	1.71	1.69	1.65	1.70	1.70	1.70	1.67	1.65	1.69	1.69	1.69	1.66	1.64
105	T.C.	20.8	21.3	21.0	23.6	26.0	21.3	21.7	21.3	23.8	26.1	21.9	22.1	21.5	24.1	26.2
	S.C.	20.4	19.9	16.7	16.7	13.3	21.0	20.4	17.3	17.2	13.6	21.6	20.8	17.8	17.8	14.0
	K.W.	2.03	2.03	2.03	2.01	1.98	2.02	2.02	2.02	2.00	1.97	2.00	2.01	2.01	1.99	1.97
115	T.C.	19.4	19.7	19.3	21.7	24.1	20.0	20.2	19.5	22.0	24.2	20.5	20.7	19.7	22.2	24.3
	S.C.	19.1	18.7	15.9	16.0	12.7	19.6	19.2	16.5	16.5	12.9	20.2	19.6	17.0	17.0	13.2
	K.W.	2.34	2.34	2.34	2.32	2.30	2.33	2.33	2.33	2.31	2.29	2.31	2.32	2.33	2.30	2.28
125	T.C.	18.0	18.2	17.5	19.9	22.2	18.6	18.8	17.7	20.1	22.3	19.1	19.3	18.0	20.4	22.4
	S.C.	17.7	17.5	15.1	15.2	12.1	18.3	18.0	15.7	15.7	12.2	18.9	18.4	16.2	16.2	12.4
	K.W.	2.65	2.64	2.66	2.63	2.62	2.64	2.64	2.65	2.63	2.61	2.62	2.63	2.64	2.62	2.60

NOTE: ALL CAPACITIES INCLUDE INDOOR FAN HEAT. KW VALUES ARE FOR THE SYSTEM (OUTDOOR + INDOOR).

Multipliers for determining the performance with other indoor sections.

NOTE: For dry bulb temperatures different than those listed (between 73-87 °F), sensible capacity increases by 1060 BTUH per 1000 CFM per degree above the listed temperature and decreases by 1060 BTUH per 1000 CFM per degree below the listed temperature.

LOW CFM

Air Handlers	Coils	T.C.	S.C.	KW
–	FC/MC62	0.99	0.99	1.15
AHE36C	–	1.01	1.03	1.03
AHE42D	–	0.97	0.94	0.99
AHX36	–	0.96	0.94	1.04
AHX42	–	1.02	1.08	1.05
AHX48	–	0.98	1.01	1.04
AHX60	–	1.04	1.14	1.08
AV*36	–	0.96	0.94	1.04
AV*48	–	0.98	0.97	1.04
MV12B	FC/MC43B	1.00	0.99	1.03
MV12D	FC/MC48D	1.00	0.99	1.00
MV12D	FC/MC60D	0.98	0.96	1.02
MV12D	FC/MC62D	1.00	1.00	1.00
MV12D	FC64D	1.02	1.02	1.01

Air Handlers	Coils	T.C.	S.C.	KW
MV16C	FC/MC43C	1.00	1.00	1.03
MV16C	FC/MC48C	1.01	1.01	1.01
MV20D	FC/MC48D	1.00	1.00	1.01
MV20D	FC/MC60D	1.00	1.03	1.03
MV20D	FC/MC62D	1.01	1.01	1.01
MV20D	FC64D	1.05	1.09	1.04
MX12B	FC/MC43B	0.98	0.97	1.02
MX12D	FC/MC48D	1.02	1.04	1.03
MX12D	FC/MC60D	1.01	1.04	1.02
MX12D	FC/MC62D	1.00	1.01	1.01
MX12D	FC64D	1.03	1.06	1.02

Continued on next page.

Furnaces	Coils	T.C.	S.C.	KW
T*(8,L)C*A12	FC/MC/PC37A	0.94	0.98	1.04
T*(8,L)C*B12	FC/MC/PC35B	0.96	0.92	1.03
T*(8,L)C*B12	FC/MC/PC43B	0.96	0.93	1.04
T*(8,L)C*B12	HD48	0.96	0.94	1.02
T*(8,L)C*C16	FC/MC/PC35C	0.97	0.97	1.05
T*(8,L)C*C16	FC/MC/PC43C	0.98	0.97	1.04
T*(8,L)C*C16	FC/MC/PC48C	1.00	0.99	1.04
T*(8,L)C*C16	FC/PC60C	0.98	0.97	1.04
T*(8,L)C*C16	HD48	0.99	0.98	1.03
T*(8,L)C*C16	UC48C	0.97	0.98	1.03
T*(8,L)C*C20	FC/MC/PC35C	1.00	1.06	1.08
T*(8,L)C*C20	FC/MC/PC43C	0.96	0.94	1.02
T*(8,L)C*C20	FC/MC/PC48C	0.96	0.93	1.02
T*(8,L)C*C20	FC/PC60C	0.99	1.00	1.04
T*(8,L)C*C20	HD48	0.96	0.92	1.02
T*(8,L)C*C20	UC48C	0.95	0.92	1.03
T*(8,L)V*A12	FC/MC/PC37A	0.94	0.98	1.04
T*(8,L)V*B12	FC/MC/PC43B	0.96	0.93	1.04
T*(8,L)V*C16	FC/MC/PC43C	0.98	0.97	1.04
T*(8,L)V*C16	FC/MC/PC48C	1.00	0.99	1.04
T*(8,L)V*C16	FC/PC60C	0.98	0.97	1.04
T*(8,L)V*C16	UC48C	0.97	0.98	1.03
T*(8,L)V*C20	FC/MC/PC43C	0.96	0.94	1.02
T*(8,L)V*C20	FC/MC/PC48C	0.96	0.93	1.02
T*(8,L)V*C20	FC/PC60C	0.99	1.00	1.04
T*(8,L)V*C20	UC48C	0.95	0.92	1.03
T*(8,L)X*A12	FC/MC/PC37A	0.94	0.93	1.04
T*(8,L)X*B12	FC/MC/PC43B	0.96	0.97	1.04
T*(8,L)X*C16	FC/MC/PC43C	0.92	0.85	1.01
T*(8,L)X*C16	FC/MC/PC48C	0.94	0.88	1.02
T*(8,L)X*C16	FC/PC60C	0.95	0.91	1.01
T*(8,L)X*C16	UC48C	0.91	0.85	1.02
T*(8,L)X*C20	FC/MC/PC43C	0.96	0.95	1.02
T*(8,L)X*C20	FC/MC/PC48C	0.96	0.96	1.02
T*(8,L)X*C20	FC/PC60C	1.00	1.01	1.04
T*(8,L)X*C20	UC48C	0.95	0.95	1.03
T*9(C,V)*B12	FC/MC/PC43B	0.97	0.97	1.05
T*9(C,V)*C16	FC/MC/PC43C	0.98	0.97	1.06
T*9(C,V)*C16	FC/MC/PC48C	1.00	0.99	1.04
T*9(C,V)*C16	FC/PC60C	0.99	1.00	1.05
T*9(C,V)*C16	UC48C	0.97	0.98	1.03

Furnaces	Coils	T.C.	S.C.	KW
T*9(C,V)*C20	FC/MC/PC43C	0.96	0.93	1.04
T*9(C,V)*C20	FC/MC/PC48C	0.96	0.94	1.02
T*9(C,V)*C20	FC/PC60C	0.98	0.98	1.05
T*9(C,V)*C20	UC48C	0.96	0.94	1.03
T*9(C,V)*D20	FC/MC/PC60D	1.00	1.01	1.04
T*9X*B12	FC/MC/PC43B	0.96	0.95	1.04
T*9X*C16	FC/MC/PC43C	0.95	0.90	1.03
T*9X*C16	FC/MC/PC48C	0.96	0.93	1.01
T*9X*C16	FC/PC60C	0.98	0.96	1.00
T*9X*C16	UC48C	0.93	0.91	1.03
T*9X*C20	FC/MC/PC43C	0.96	0.96	1.04
T*9X*C20	FC/MC/PC48C	0.96	0.97	1.02
T*9X*C20	FC/PC60C	1.00	1.02	1.03
T*9X*C20	UC48C	0.96	0.97	1.03
T*9X*D20	FC/MC/PC48D	1.00	1.02	1.04
T*9X*D20	FC/MC/PC60D	1.02	1.08	1.03
T*9X*D20	FC/MC62D	0.99	0.99	1.03
T*9X*D20	FC64D	1.03	1.04	1.04
T*9X*D20	UC48D	0.96	0.99	1.02
Y*(8,L)C*A12	FC/MC/PC37A	0.94	0.98	1.04
Y*(8,L)C*B12	FC/MC/PC43B	0.96	0.93	1.04
Y*(8,L)C*C16	FC/MC/PC43C	0.98	0.97	1.04
Y*(8,L)C*C16	FC/MC/PC48C	1.00	0.99	1.04
Y*(8,L)C*C16	FC/PC60C	0.98	0.97	1.04
Y*(8,L)C*C16	UC48C	0.97	0.98	1.03
Y*(8,L)C*C20	FC/MC/PC43C	0.96	0.94	1.02
Y*(8,L)C*C20	FC/MC/PC48C	0.96	0.93	1.02
Y*(8,L)C*C20	FC/PC60C	0.99	1.00	1.04
Y*(8,L)C*C20	UC48C	0.95	0.92	1.03
Y*9C*B12	FC/MC/PC43B	0.97	0.97	1.05
Y*9C*C16	FC/MC/PC43C	0.98	0.97	1.06
Y*9C*C16	FC/MC/PC48C	1.00	0.99	1.04
Y*9C*C16	FC/PC60C	0.99	1.00	1.05
Y*9C*C16	UC48C	0.97	0.98	1.03
Y*9C*C20	FC/MC/PC43C	0.96	0.93	1.04
Y*9C*C20	FC/MC/PC48C	0.96	0.94	1.02
Y*9C*C20	FC/PC60C	0.98	0.98	1.05
Y*9C*C20	UC48C	0.96	0.94	1.03
Y*9C*D20	FC/MC/PC60D	1.00	1.01	1.04
Y*9C*D20	FC64D	1.03	1.04	1.04

COOLING PERFORMANCE DATA - HIGH CFM 2-STAGE OPERATION

OUTDOOR UNIT MODEL NO.		CZH03611(C)														
INDOOR COIL MODEL NO.		FC62D + MV12D														
CONDENSER ENTERING AIR TEMPERATURE	ID CFM	1050					1150					1250				
	ID DB (°F)	80	80	75	80	80	80	80	75	80	80	80	80	75	80	80
	ID WB (°F)	57	62	62	67	72	57	62	62	67	72	57	62	62	67	72
65	T.C.	35.7	38.1	38.5	41.2	45.8	37.2	39.1	38.8	41.7	46.1	38.6	40.1	39.1	42.1	46.3
	S.C.	34.5	31.9	27.3	26.9	21.2	36.1	33.4	28.6	27.7	22.1	37.5	35.0	29.9	28.4	22.9
	K.W.	1.71	1.74	1.74	1.79	1.82	1.74	1.76	1.76	1.81	1.84	1.78	1.79	1.78	1.84	1.86
75	T.C.	34.6	36.5	36.7	39.5	43.6	35.9	37.4	37.1	40.0	43.9	37.1	38.2	37.5	40.4	44.2
	S.C.	33.6	31.1	26.4	26.0	20.6	34.8	32.6	27.6	27.0	21.4	36.0	34.1	28.8	27.9	22.1
	K.W.	1.98	2.00	2.00	2.05	2.07	2.00	2.02	2.01	2.06	2.09	2.04	2.05	2.04	2.09	2.12
85	T.C.	33.6	35.0	35.0	37.8	41.5	34.6	35.7	35.4	38.3	41.8	35.5	36.4	35.9	38.7	42.0
	S.C.	32.6	30.2	25.6	25.2	20.0	33.6	31.8	26.6	26.3	20.6	34.5	33.3	27.7	27.4	21.2
	K.W.	2.24	2.26	2.26	2.30	2.33	2.26	2.28	2.27	2.32	2.35	2.30	2.30	2.30	2.34	2.38
95	T.C.	32.5	33.4	33.2	36.1	39.3	33.3	34.0	33.7	36.6	39.6	34.0	34.5	34.2	37.1	39.8
	S.C.	31.6	29.4	24.7	24.3	19.4	32.3	31.0	25.6	25.6	19.9	33.0	32.4	26.6	26.9	20.3
	K.W.	2.50	2.52	2.51	2.55	2.59	2.52	2.53	2.53	2.57	2.60	2.56	2.56	2.56	2.59	2.63
105	T.C.	30.7	31.5	31.2	33.7	37.0	31.5	32.0	31.6	34.2	37.2	32.1	32.6	32.0	34.7	37.4
	S.C.	29.9	28.4	23.7	23.6	18.6	30.6	29.6	24.7	24.8	19.0	31.3	30.6	25.7	25.9	19.4
	K.W.	2.90	2.90	2.90	2.94	2.97	2.92	2.92	2.91	2.96	2.99	2.95	2.95	2.94	2.98	3.02
115	T.C.	29.0	29.6	29.2	31.3	34.7	29.7	30.2	29.5	31.8	34.9	30.4	30.7	29.8	32.3	35.0
	S.C.	28.3	27.5	22.8	22.9	17.9	29.0	28.2	23.8	23.9	18.2	29.6	28.9	24.8	24.9	18.5
	K.W.	3.28	3.28	3.27	3.32	3.35	3.30	3.29	3.29	3.33	3.37	3.33	3.32	3.31	3.35	3.40
125	T.C.	27.3	27.7	27.2	29.0	32.4	28.0	28.3	27.4	29.5	32.6	28.6	28.8	27.7	30.0	32.7
	S.C.	26.7	26.5	21.9	22.2	17.2	27.3	26.8	22.9	23.1	17.4	28.0	27.1	24.0	24.0	17.6
	K.W.	3.66	3.65	3.65	3.70	3.73	3.68	3.67	3.66	3.71	3.75	3.71	3.70	3.69	3.73	3.78

NOTE: ALL CAPACITIES INCLUDE INDOOR FAN HEAT. KW VALUES ARE FOR THE SYSTEM (OUTDOOR + INDOOR).

Multipliers for determining the performance with other indoor sections.

NOTE: For dry bulb temperatures different than those listed (between 73-87 °F), sensible capacity increases by 1060 BTUH per 1000 CFM per degree above the listed temperature and decreases by 1060 BTUH per 1000 CFM per degree below the listed temperature.

HIGH CFM

Air Handlers	Coils	T.C.	S.C.	KW
–	FC/MC62	0.98	1.02	1.12
AHE36C	–	0.99	0.99	1.03
AHE42D	–	1.00	1.01	1.02
AHX36	–	0.98	0.99	1.04
AHX42	–	1.00	1.01	1.04
AHX48	–	0.99	1.01	1.04
AHX60	–	1.01	1.04	1.05
AV*36	–	0.98	0.99	1.04
AV*48	–	0.99	1.00	1.04
MV12B	FC/MC43B	0.98	0.98	1.03
MV12D	FC/MC48D	0.98	0.98	1.00
MV12D	FC/MC60D	0.98	0.98	1.04
MV12D	FC/MC62D	1.00	1.00	1.00

Air Handlers	Coils	T.C.	S.C.	KW
MV12D	FC64D	0.98	1.00	0.97
MV16C	FC/MC43C	0.99	0.99	1.01
MV16C	FC/MC48C	0.99	0.99	1.00
MV20D	FC/MC48D	1.00	1.04	1.00
MV20D	FC/MC60D	1.01	1.04	1.06
MV20D	FC/MC62D	1.01	1.01	1.00
MV20D	FC64D	1.05	1.10	1.05
MX12B	FC/MC43B	0.99	1.00	1.06
MX12D	FC/MC48D	1.01	1.02	1.05
MX12D	FC/MC60D	1.01	1.03	1.06
MX12D	FC/MC62D	1.02	1.04	1.04
MX12D	FC64D	1.05	1.09	1.03

Continued on next page.

Furnaces	Coils	T.C.	S.C.	KW
T*(8,L)C*A12	FC/MC/PC37A	0.93	1.04	1.02
T*(8,L)C*B12	FC/MC/PC35B	0.96	0.95	1.09
T*(8,L)C*B12	FC/MC/PC43B	0.97	1.09	1.08
T*(8,L)C*B12	HD48	0.98	0.98	1.05
T*(8,L)C*C16	FC/MC/PC35C	0.97	0.96	1.04
T*(8,L)C*C16	FC/MC/PC43C	0.98	1.07	1.03
T*(8,L)C*C16	FC/MC/PC48C	0.99	1.09	1.03
T*(8,L)C*C16	FC/PC60C	0.98	0.98	1.04
T*(8,L)C*C16	HD48	0.98	0.99	1.02
T*(8,L)C*C16	UC48C	0.97	0.99	1.03
T*(8,L)C*C20	FC/MC/PC35C	0.96	0.95	1.03
T*(8,L)C*C20	FC/MC/PC43C	0.98	1.07	1.03
T*(8,L)C*C20	FC/MC/PC48C	0.99	1.07	1.03
T*(8,L)C*C20	FC/PC60C	0.99	1.00	1.05
T*(8,L)C*C20	HD48	0.98	0.97	1.01
T*(8,L)C*C20	UC48C	0.97	0.96	1.02
T*(8,L)V*A12	FC/MC/PC37A	0.93	1.04	1.02
T*(8,L)V*B12	FC/MC/PC43B	0.97	1.09	1.08
T*(8,L)V*C16	FC/MC/PC43C	0.98	1.07	1.03
T*(8,L)V*C16	FC/MC/PC48C	0.99	1.09	1.03
T*(8,L)V*C16	FC/PC60C	0.98	0.98	1.04
T*(8,L)V*C16	UC48C	0.97	0.99	1.03
T*(8,L)V*C20	FC/MC/PC43C	0.98	1.07	1.03
T*(8,L)V*C20	FC/MC/PC48C	0.99	1.07	1.03
T*(8,L)V*C20	FC/PC60C	0.99	1.00	1.05
T*(8,L)V*C20	UC48C	0.97	0.96	1.02
T*(8,L)X*A12	FC/MC/PC37A	0.93	0.95	1.02
T*(8,L)X*B12	FC/MC/PC43B	0.97	0.99	1.08
T*(8,L)X*C16	FC/MC/PC43C	0.98	0.98	1.01
T*(8,L)X*C16	FC/MC/PC48C	0.99	1.00	1.03
T*(8,L)X*C16	FC/PC60C	0.99	1.00	1.03
T*(8,L)X*C16	UC48C	0.97	0.99	1.03
T*(8,L)X*C20	FC/MC/PC43C	0.98	1.00	1.03
T*(8,L)X*C20	FC/MC/PC48C	0.99	1.02	1.03
T*(8,L)X*C20	FC/PC60C	1.01	1.03	1.04
T*(8,L)X*C20	UC48C	0.97	0.99	1.02
T*9(C,V)*B12	FC/MC/PC43B	0.97	0.97	1.08
T*9(C,V)*C16	FC/MC/PC43C	0.97	0.98	1.07
T*9(C,V)*C16	FC/MC/PC48C	0.99	1.00	1.04
T*9(C,V)*C16	FC/PC60C	0.99	1.00	1.08
T*9(C,V)*C16	UC48C	0.97	0.98	1.05

Furnaces	Coils	T.C.	S.C.	KW
T*9(C,V)*C20	FC/MC/PC43C	0.98	0.98	1.05
T*9(C,V)*C20	FC/MC/PC48C	1.00	1.04	1.08
T*9(C,V)*C20	FC/PC60C	1.00	1.03	1.10
T*9(C,V)*C20	UC48C	0.98	1.01	1.07
T*9(C,V)*D20	FC/MC/PC60D	0.99	1.01	1.07
T*9X*B12	FC/MC/PC43B	0.97	1.00	1.08
T*9X*C16	FC/MC/PC43C	0.97	0.98	1.07
T*9X*C16	FC/MC/PC48C	0.99	1.02	1.06
T*9X*C16	FC/PC60C	1.01	1.04	1.06
T*9X*C16	UC48C	0.97	1.00	1.07
T*9X*C20	FC/MC/PC43C	0.98	0.98	1.05
T*9X*C20	FC/MC/PC48C	1.00	1.01	1.08
T*9X*C20	FC/PC60C	1.00	1.02	1.06
T*9X*C20	UC48C	0.98	0.99	1.07
T*9X*D20	FC/MC/PC48D	1.01	1.02	1.04
T*9X*D20	FC/MC/PC60D	1.01	1.05	1.05
T*9X*D20	FC/MC62D	1.01	1.02	1.04
T*9X*D20	FC64D	0.98	1.02	1.00
T*9X*D20	UC48D	0.98	1.01	1.06
Y*(8,L)C*A12	FC/MC/PC37A	0.93	1.04	1.02
Y*(8,L)C*B12	FC/MC/PC43B	0.97	1.09	1.08
Y*(8,L)C*C16	FC/MC/PC43C	0.98	1.07	1.03
Y*(8,L)C*C16	FC/MC/PC48C	0.99	1.09	1.03
Y*(8,L)C*C16	FC/PC60C	0.98	0.98	1.04
Y*(8,L)C*C16	UC48C	0.97	0.99	1.03
Y*(8,L)C*C20	FC/MC/PC43C	0.98	1.07	1.03
Y*(8,L)C*C20	FC/MC/PC48C	0.99	1.07	1.03
Y*(8,L)C*C20	FC/PC60C	0.99	1.00	1.05
Y*(8,L)C*C20	UC48C	0.97	0.96	1.02
Y*9C*B12	FC/MC/PC43B	0.97	0.97	1.08
Y*9C*C16	FC/MC/PC43C	0.97	0.98	1.07
Y*9C*C16	FC/MC/PC48C	0.99	1.00	1.04
Y*9C*C16	FC/PC60C	0.99	1.00	1.08
Y*9C*C16	UC48C	0.97	0.98	1.05
Y*9C*C20	FC/MC/PC43C	0.98	0.98	1.05
Y*9C*C20	FC/MC/PC48C	1.00	1.04	1.08
Y*9C*C20	FC/PC60C	1.00	1.03	1.10
Y*9C*C20	UC48C	0.98	1.01	1.07
Y*9C*D20	FC/MC/PC60D	0.99	1.01	1.07
Y*9C*D20	FC64D	0.98	1.02	1.00

COOLING PERFORMANCE DATA - LOW CFM 1-STAGE OPERATION

OUTDOOR UNIT MODEL NO.	CZH04811(C)															
INDOOR COIL MODEL NO.	FC62D + MV20D															
CONDENSER ENTERING AIR TEMPERATURE	ID CFM	1050					1100					1150				
	ID DB (°F)	80	80	75	80	80	80	80	75	80	80	80	80	75	80	80
	ID WB (°F)	57	62	62	67	72	57	62	62	67	72	57	62	62	67	72
65	T.C.	35.4	36.6	36.2	39.8	42.3	36.1	37.2	36.8	40.2	42.9	36.8	37.8	37.4	40.6	43.4
	S.C.	34.3	31.8	26.9	27.2	21.7	34.8	32.5	27.6	27.8	22.0	35.3	33.3	28.2	28.5	22.3
	K.W.	1.50	1.49	1.49	1.48	1.48	1.50	1.49	1.49	1.48	1.47	1.49	1.49	1.49	1.47	1.47
75	T.C.	34.0	34.9	34.5	37.8	40.4	34.6	35.4	35.0	38.2	40.9	35.3	36.0	35.5	38.6	41.5
	S.C.	32.9	31.0	26.2	26.4	21.0	33.4	31.7	26.8	27.0	21.3	33.9	32.4	27.4	27.6	21.7
	K.W.	1.81	1.81	1.81	1.80	1.79	1.81	1.81	1.80	1.79	1.78	1.80	1.80	1.80	1.79	1.78
85	T.C.	32.5	33.1	32.8	35.7	38.5	33.1	33.7	33.2	36.2	39.0	33.7	34.2	33.6	36.6	39.5
	S.C.	31.5	30.2	25.5	25.5	20.3	32.0	30.9	26.0	26.1	20.7	32.5	31.6	26.6	26.7	21.1
	K.W.	2.12	2.12	2.12	2.11	2.10	2.12	2.12	2.12	2.11	2.10	2.12	2.12	2.11	2.11	2.09
95	T.C.	31.1	31.4	31.1	33.7	36.6	31.7	31.9	31.4	34.2	37.1	32.2	32.4	31.7	34.6	37.6
	S.C.	30.1	29.4	24.8	24.7	19.6	30.6	30.1	25.3	25.3	20.0	31.1	30.8	25.8	25.8	20.4
	K.W.	2.44	2.44	2.44	2.43	2.41	2.43	2.43	2.43	2.43	2.41	2.43	2.43	2.43	2.42	2.40
105	T.C.	29.4	29.7	28.9	31.5	34.2	30.0	30.2	29.3	31.9	34.6	30.5	30.7	29.6	32.3	35.0
	S.C.	28.5	27.8	23.8	23.8	18.7	28.9	28.5	24.3	24.4	19.1	29.4	29.1	24.8	24.9	19.6
	K.W.	2.86	2.87	2.87	2.86	2.84	2.86	2.86	2.86	2.86	2.84	2.86	2.86	2.86	2.85	2.84
115	T.C.	27.8	28.0	26.9	29.3	31.9	28.4	28.6	27.2	29.7	32.2	28.9	29.1	27.6	30.1	32.5
	S.C.	26.9	26.3	22.9	23.0	17.8	27.4	26.9	23.4	23.5	18.3	27.8	27.5	23.9	24.1	18.7
	K.W.	3.28	3.28	3.29	3.29	3.26	3.27	3.28	3.28	3.27	3.26	3.27	3.27	3.28	3.27	3.26
125	T.C.	26.2	26.4	24.8	27.1	29.6	26.7	26.9	25.2	27.5	29.8	27.2	27.5	25.6	27.9	30.0
	S.C.	25.4	24.8	21.9	22.1	16.9	25.8	25.4	22.4	22.7	17.4	26.2	26.0	22.9	23.3	17.9
	K.W.	3.69	3.70	3.71	3.71	3.67	3.69	3.69	3.70	3.69	3.67	3.69	3.69	3.70	3.68	3.68

NOTE: ALL CAPACITIES INCLUDE INDOOR FAN HEAT. KW VALUES ARE FOR THE SYSTEM (OUTDOOR + INDOOR).

Multipliers for determining the performance with other indoor sections.

NOTE: For dry bulb temperatures different than those listed (between 73-87 °F), sensible capacity increases by 1060 BTUH per 1000 CFM per degree above the listed temperature and decreases by 1060 BTUH per 1000 CFM per degree below the listed temperature.

LOW CFM

Air Handlers	Coils	T.C.	S.C.	KW
–	FC/MC62	0.99	1.02	1.11
AHE48D	–	0.96	0.94	1.02
AHE60D	–	1.00	1.04	1.02
AHX48	–	0.97	0.99	1.05
AHX60	–	0.96	0.96	1.03
AV*48	–	0.97	0.98	1.05
AV*60	–	0.96	0.95	1.03
F4FV060	–	0.99	0.99	1.01

Air Handlers	Coils	T.C.	S.C.	KW
MV16C	FC60C	0.97	0.97	1.03
MV16C	FC/MC48C	1.00	1.00	0.99
MV20D	FC/MC48D	1.00	1.00	1.00
MV20D	FC/MC60D	0.97	0.97	1.05
MV20D	FC/MC62D	1.00	1.00	1.00
MV20D	FC64D	1.04	1.06	1.00
MX16C	FC/MC48C	1.01	1.04	1.03
MX16C	FC60C	0.98	0.98	1.02

Continued on next page.

Furnaces	Coils	T.C.	S.C.	KW
T*(8,L)C*C16	FC/MC/PC48C	0.98	0.98	1.02
T*(8,L)C*C16	FC/PC60C	0.96	0.95	1.01
T*(8,L)C*C16	HD60	0.99	0.98	1.01
T*(8,L)C*C16	UC48C	0.93	0.94	1.01
T*(8,L)C*C16	UC60C	0.88	0.86	1.01
T*(8,L)C*C20	FC/MC/PC48C	0.98	0.98	1.02
T*(8,L)C*C20	FC/PC60C	0.96	0.95	0.99
T*(8,L)C*C20	HD60	0.99	0.98	0.99
T*(8,L)C*C20	UC48C	0.93	0.94	1.03
T*(8,L)C*C20	UC60C	0.88	0.86	1.01
T*(8,L)V*C16	FC/MC/PC48C	0.98	0.98	1.02
T*(8,L)V*C16	FC/PC60C	0.96	0.95	1.01
T*(8,L)V*C16	HD60	0.99	0.98	1.01
T*(8,L)V*C16	UC48C	0.93	0.94	1.01
T*(8,L)V*C16	UC60C	0.88	0.86	1.01
T*(8,L)V*C20	FC/MC/PC48C	0.98	0.98	1.02
T*(8,L)V*C20	FC/MC62D	0.96	0.97	0.98
T*(8,L)V*C20	FC/PC60C	0.96	0.95	0.99
T*(8,L)V*C20	HD60	0.99	0.98	0.99
T*(8,L)V*C20	UC48C	0.93	0.94	1.03
T*(8,L)V*C20	UC60C	0.88	0.86	1.01
T*(8,L)X*C16	FC/MC/PC48C	0.98	1.00	1.06
T*(8,L)X*C16	FC/MC62D	0.99	1.00	1.05
T*(8,L)X*C16	FC/PC60C	0.96	0.98	1.03
T*(8,L)X*C16	FC64D	1.04	1.08	1.02
T*(8,L)X*C16	UC48C	0.90	0.91	1.07
T*(8,L)X*C16	UC60C	0.88	0.89	1.03
T*(8,L)X*C20	FC/MC/PC48C	0.93	0.90	1.03
T*(8,L)X*C20	FC/MC/PC60D	0.92	0.89	1.01
T*(8,L)X*C20	FC/MC62D	0.93	0.89	1.02
T*(8,L)X*C20	FC/PC60C	0.92	0.89	1.01
T*(8,L)X*C20	FC64D	0.97	0.94	0.99
T*(8,L)X*C20	UC60C	0.86	0.82	1.02
T*(8,L)X*C20	UC60D	0.86	0.82	1.02
T*9(C,V)*C16	FC/MC/PC48C	0.98	0.98	1.02
T*9(C,V)*C16	FC/PC60C	0.95	0.95	1.01
T*9(C,V)*C16	HD60	0.98	0.98	1.02
T*9(C,V)*C16	UC48C	0.93	0.95	1.03
T*9(C,V)*C16	UC60C	0.88	0.85	1.03
T*9(C,V)*C20	FC/MC/PC48C	0.98	0.98	1.02
T*9(C,V)*C20	FC/PC60C	0.96	0.95	1.01
T*9(C,V)*C20	HD60	0.99	0.98	1.01
T*9(C,V)*C20	UC48C	0.93	0.95	1.03
T*9(C,V)*C20	UC60C	0.88	0.86	1.03
T*9(C,V)*D20	FC/MC/PC48D	0.97	0.97	1.03
T*9(C,V)*D20	FC/MC/PC60D	0.95	0.95	1.01
T*9(C,V)*D20	FC/MC62D	0.97	0.98	1.01

Furnaces	Coils	T.C.	S.C.	KW
T*9(C,V)*D20	HD60	0.99	0.98	1.03
T*9(C,V)*D20	UC48D	0.87	0.88	1.02
T*9(C,V)*D20	UC60D	0.88	0.85	1.03
T*9X*C16	FC/MC62D	1.00	1.01	1.01
T*9X*C16	FC64D	1.04	1.06	1.02
T*9X*C20	FC/MC/PC48C	0.98	1.02	1.06
T*9X*C20	FC/MC62D	1.00	1.04	1.06
T*9X*C20	FC/PC60C	0.92	1.03	1.00
T*9X*C20	FC64D	0.97	0.94	0.99
T*9X*C20	UC48C	0.91	0.93	1.07
T*9X*D20	FC/MC/PC48D	0.97	1.02	1.03
T*9X*D20	FC/MC/PC60D	0.95	1.00	1.01
T*9X*D20	FC/MC62D	0.97	1.01	1.03
T*9X*D20	FC64D	0.97	0.94	0.99
T*9X*D20	UC48D	0.87	0.89	1.02
T*9X*D20	UC60D	0.88	0.90	1.03
Y*(8,L)C*C16	FC/MC/PC48C	0.98	0.98	1.02
Y*(8,L)C*C16	FC/PC60C	0.96	0.95	1.01
Y*(8,L)C*C16	HD60	0.99	0.98	1.01
Y*(8,L)C*C16	UC48C	0.93	0.94	1.01
Y*(8,L)C*C16	UC60C	0.88	0.86	1.01
Y*(8,L)C*C20	FC/MC/PC48C	0.98	0.98	1.02
Y*(8,L)C*C20	FC/MC62D	0.96	0.97	0.98
Y*(8,L)C*C20	FC/PC60C	0.96	0.95	0.99
Y*(8,L)C*C20	HD60	0.99	0.98	0.99
Y*(8,L)C*C20	UC48C	0.93	0.94	1.03
Y*(8,L)C*C20	UC60C	0.88	0.86	1.01
Y*9C*C16	FC/MC/PC48C	0.98	0.98	1.02
Y*9C*C16	FC/PC60C	0.95	0.95	1.01
Y*9C*C16	FC64D	1.03	1.05	1.03
Y*9C*C16	HD60	0.98	0.98	1.02
Y*9C*C16	UC48C	0.93	0.95	1.03
Y*9C*C16	UC60C	0.88	0.85	1.03
Y*9C*C20	FC/MC/PC48C	0.98	0.98	1.02
Y*9C*C20	FC/PC60C	0.96	0.95	1.01
Y*9C*C20	FC64D	0.99	0.96	1.01
Y*9C*C20	HD60	0.99	0.98	1.01
Y*9C*C20	UC48C	0.93	0.95	1.03
Y*9C*C20	UC60C	0.88	0.86	1.03
Y*9C*D20	FC/MC/PC48D	0.97	0.97	1.03
Y*9C*D20	FC/MC/PC60D	0.95	0.95	1.01
Y*9C*D20	FC/MC62D	0.97	0.98	1.01
Y*9C*D20	FC64D	1.00	0.99	1.01
Y*9C*D20	HD60	0.99	0.98	1.03
Y*9C*D20	UC48D	0.87	0.88	1.02
Y*9C*D20	UC60D	0.88	0.85	1.03

COOLING PERFORMANCE DATA - HIGH CFM 2-STAGE OPERATION

OUTDOOR UNIT MODEL NO.		CZH04811(C)														
INDOOR COIL MODEL NO.		FC62D + MV20D														
CONDENSER ENTERING AIR TEMPERATURE	ID CFM	1550					1650					1750				
	ID DB (°F)	80	80	75	80	80	80	80	75	80	80	80	80	75	80	80
	ID WB (°F)	57	62	62	67	72	57	62	62	67	72	57	62	62	67	72
65	T.C.	48.7	49.9	49.0	53.2	56.4	49.6	50.4	49.5	54.4	56.8	50.5	50.9	50.0	55.5	57.2
	S.C.	47.7	44.7	38.0	37.7	29.5	48.6	46.0	38.8	38.7	30.1	49.4	47.3	39.7	39.8	30.7
	K.W.	2.53	2.57	2.56	2.64	2.71	2.58	2.61	2.61	2.67	2.75	2.64	2.67	2.66	2.72	2.79
75	T.C.	46.8	47.7	46.8	50.9	53.6	47.6	48.2	47.2	51.8	54.0	48.3	48.8	47.6	52.5	54.4
	S.C.	45.9	43.5	36.8	36.6	28.5	46.6	44.7	37.7	37.6	29.2	47.3	45.9	38.6	38.6	29.7
	K.W.	2.89	2.91	2.90	2.98	3.05	2.93	2.96	2.95	3.02	3.09	2.99	3.01	3.00	3.07	3.14
85	T.C.	45.0	45.5	44.5	48.6	50.9	45.6	46.1	44.9	49.1	51.3	46.2	46.6	45.2	49.6	51.6
	S.C.	44.0	42.4	35.7	35.5	27.6	44.6	43.4	36.6	36.5	28.2	45.3	44.5	37.5	37.4	28.8
	K.W.	3.24	3.26	3.25	3.33	3.40	3.29	3.31	3.29	3.37	3.44	3.34	3.36	3.34	3.42	3.50
95	T.C.	43.1	43.4	42.2	46.3	48.2	43.5	43.9	42.5	46.5	48.5	44.0	44.4	42.9	46.6	48.8
	S.C.	42.1	41.2	34.5	34.4	26.7	42.7	42.1	35.5	35.3	27.2	43.2	43.0	36.4	36.2	27.8
	K.W.	3.59	3.61	3.60	3.68	3.75	3.64	3.66	3.64	3.72	3.79	3.69	3.71	3.68	3.77	3.85
105	T.C.	40.7	41.0	39.6	43.5	45.2	41.2	41.5	39.9	43.7	45.4	41.6	41.9	40.1	43.9	45.6
	S.C.	39.9	39.0	33.3	33.3	25.7	40.4	39.8	34.2	34.2	26.2	40.9	40.6	35.1	35.1	26.6
	K.W.	4.10	4.12	4.10	4.18	4.25	4.15	4.16	4.14	4.22	4.29	4.21	4.22	4.19	4.27	4.35
115	T.C.	38.5	38.7	37.2	40.7	42.4	38.9	39.1	37.3	40.9	42.5	39.3	39.5	37.4	41.2	42.5
	S.C.	37.7	36.9	32.1	32.2	24.7	38.1	37.6	33.0	33.1	25.1	38.6	38.2	33.9	34.0	25.5
	K.W.	4.60	4.60	4.58	4.67	4.74	4.65	4.65	4.62	4.71	4.78	4.70	4.71	4.67	4.76	4.83
125	T.C.	36.2	36.4	34.7	37.9	39.6	36.6	36.8	34.7	38.2	39.6	36.9	37.1	34.7	38.4	39.5
	S.C.	35.5	34.8	30.9	31.1	23.7	35.9	35.3	31.7	32.0	24.1	36.2	35.8	32.6	32.9	24.5
	K.W.	5.09	5.09	5.07	5.16	5.23	5.14	5.14	5.11	5.20	5.27	5.20	5.20	5.16	5.24	5.32

NOTE: ALL CAPACITIES INCLUDE INDOOR FAN HEAT. KW VALUES ARE FOR THE SYSTEM (OUTDOOR + INDOOR).

Multipliers for determining the performance with other indoor sections.

NOTE: For dry bulb temperatures different than those listed (between 73-87 °F), sensible capacity increases by 1060 BTUH per 1000 CFM per degree above the listed temperature and decreases by 1060 BTUH per 1000 CFM per degree below the listed temperature.

HIGH CFM

Air Handlers	Coils	T.C.	S.C.	KW
–	FC/MC62	0.98	0.96	1.06
AHE48D	–	0.98	0.97	1.00
AHE60D	–	0.99	0.98	0.99
AHX48	–	0.97	0.96	1.03
AHX60	–	0.97	0.96	1.03
AV*48	–	0.97	0.95	1.03
AV*60	–	0.97	0.94	1.03
F4FV060	–	0.96	0.95	0.98
MV16C	FC60C	0.98	0.97	1.02
MV16C	FC/MC48C	0.99	0.98	0.99
MV20D	FC/MC48D	0.99	0.98	1.00
MV20D	FC/MC60D	0.98	0.97	1.02
MV20D	FC/MC62D	1.00	1.00	1.00
MV20D	FC64D	1.03	1.03	1.01
MX16C	FC/MC48C	1.00	1.00	1.02
MX16C	FC60C	0.99	0.97	0.99

Continued on next page.

Furnaces	Coils	T.C.	S.C.	KW
T*(8,L)C*C16	FC/MC/PC48C	0.98	1.04	1.04
T*(8,L)C*C16	FC/PC60C	0.96	1.01	1.02
T*(8,L)C*C16	HD60	0.98	0.97	1.02
T*(8,L)C*C16	UC48C	0.95	0.93	1.03
T*(8,L)C*C16	UC60C	0.90	0.87	1.00
T*(8,L)C*C20	FC/MC/PC48C	0.98	0.96	1.04
T*(8,L)C*C20	FC/PC60C	0.97	1.02	1.01
T*(8,L)C*C20	HD60	0.98	0.97	1.02
T*(8,L)C*C20	UC48C	0.95	0.93	1.03
T*(8,L)C*C20	UC60C	0.91	0.87	0.99
T*(8,L)V*C16	FC/MC/PC48C	0.98	1.04	1.04
T*(8,L)V*C16	FC/PC60C	0.96	1.01	1.02
T*(8,L)V*C16	HD60	0.98	0.97	1.02
T*(8,L)V*C16	UC48C	0.95	0.93	1.03
T*(8,L)V*C16	UC60C	0.90	0.87	1.00
T*(8,L)V*C20	FC/MC/PC48C	0.98	0.96	1.04
T*(8,L)V*C20	FC/MC62D	0.98	0.97	0.99
T*(8,L)V*C20	FC/PC60C	0.97	1.02	1.01
T*(8,L)V*C20	HD60	0.98	0.97	1.02
T*(8,L)V*C20	UC48C	0.95	0.93	1.03
T*(8,L)V*C20	UC60C	0.91	0.87	0.99
T*(8,L)X*C16	FC/MC/PC48C	0.98	0.96	1.06
T*(8,L)X*C16	FC/MC62D	0.96	0.94	1.02
T*(8,L)X*C16	FC/PC60C	0.96	0.93	1.04
T*(8,L)X*C16	FC64D	1.00	0.97	0.98
T*(8,L)X*C16	UC48C	0.91	0.88	1.04
T*(8,L)X*C16	UC60C	0.90	0.87	1.03
T*(8,L)X*C20	FC/MC/PC48C	0.98	0.97	1.04
T*(8,L)X*C20	FC/MC/PC60D	0.97	0.94	1.03
T*(8,L)X*C20	FC/MC62D	0.99	0.98	1.03
T*(8,L)X*C20	FC/PC60C	0.97	0.94	1.03
T*(8,L)X*C20	FC64D	1.02	0.99	0.98
T*(8,L)X*C20	UC60C	0.92	0.89	1.01
T*(8,L)X*C20	UC60D	0.92	0.89	1.01
T*9(C,V)*C16	FC/MC/PC48C	0.98	0.95	1.04
T*9(C,V)*C16	FC/PC60C	0.96	0.94	1.04
T*9(C,V)*C16	HD60	0.98	0.97	1.04
T*9(C,V)*C16	UC48C	0.94	0.92	1.04
T*9(C,V)*C16	UC60C	0.90	0.87	1.03
T*9(C,V)*C20	FC/MC/PC48C	0.98	0.95	1.04
T*9(C,V)*C20	FC/PC60C	0.96	0.94	1.04
T*9(C,V)*C20	HD60	0.98	0.97	1.04
T*9(C,V)*C20	UC48C	0.94	0.92	1.04
T*9(C,V)*C20	UC60C	0.90	0.87	1.03
T*9(C,V)*D20	FC/MC/PC48D	0.97	0.95	1.05
T*9(C,V)*D20	FC/MC/PC60D	0.96	0.94	1.02
T*9(C,V)*D20	FC/MC62D	0.97	0.95	1.03

Furnaces	Coils	T.C.	S.C.	KW
T*9(C,V)*D20	HD60	0.98	0.97	1.04
T*9(C,V)*D20	UC48D	0.90	0.87	1.03
T*9(C,V)*D20	UC60D	0.90	0.87	1.03
T*9X*C16	FC/MC62D	0.98	0.97	0.99
T*9X*C16	FC64D	1.02	0.98	1.02
T*9X*C20	FC/MC/PC48C	0.98	0.96	1.04
T*9X*C20	FC/MC62D	0.98	0.96	1.04
T*9X*C20	FC/PC60C	0.94	0.96	1.06
T*9X*C20	FC64D	1.02	0.99	0.98
T*9X*C20	UC48C	0.92	0.89	1.05
T*9X*D20	FC/MC/PC48D	0.97	0.95	1.05
T*9X*D20	FC/MC/PC60D	0.96	0.92	1.02
T*9X*D20	FC/MC62D	0.97	0.95	1.05
T*9X*D20	FC64D	1.01	0.98	0.99
T*9X*D20	UC48D	0.90	0.88	1.03
T*9X*D20	UC60D	0.90	0.87	1.03
Y*(8,L)C*C16	FC/MC/PC48C	0.98	1.04	1.04
Y*(8,L)C*C16	FC/PC60C	0.96	1.01	1.02
Y*(8,L)C*C16	HD60	0.98	0.97	1.02
Y*(8,L)C*C16	UC48C	0.95	0.93	1.03
Y*(8,L)C*C16	UC60C	0.90	0.87	1.00
Y*(8,L)C*C20	FC/MC/PC48C	0.98	0.96	1.04
Y*(8,L)C*C20	FC/MC62D	0.98	0.97	0.99
Y*(8,L)C*C20	FC/PC60C	0.97	1.02	1.01
Y*(8,L)C*C20	HD60	0.98	0.97	1.02
Y*(8,L)C*C20	UC48C	0.95	0.93	1.03
Y*(8,L)C*C20	UC60C	0.91	0.87	0.99
Y*9C*C16	FC/MC/PC48C	0.98	0.95	1.04
Y*9C*C16	FC/PC60C	0.96	0.94	1.04
Y*9C*C16	FC64D	1.02	1.03	1.04
Y*9C*C16	HD60	0.98	0.97	1.04
Y*9C*C16	UC48C	0.94	0.92	1.04
Y*9C*C16	UC60C	0.90	0.87	1.03
Y*9C*C20	FC/MC/PC48C	0.98	0.95	1.04
Y*9C*C20	FC/PC60C	0.96	0.94	1.04
Y*9C*C20	FC64D	1.01	0.97	1.03
Y*9C*C20	HD60	0.98	0.97	1.04
Y*9C*C20	UC48C	0.94	0.92	1.04
Y*9C*C20	UC60C	0.90	0.87	1.03
Y*9C*D20	FC/MC/PC48D	0.97	0.95	1.05
Y*9C*D20	FC/MC/PC60D	0.96	0.94	1.02
Y*9C*D20	FC/MC62D	0.97	0.95	1.03
Y*9C*D20	FC64D	1.01	0.98	1.01
Y*9C*D20	HD60	0.98	0.97	1.04
Y*9C*D20	UC48D	0.90	0.87	1.03
Y*9C*D20	UC60D	0.90	0.87	1.03

COOLING PERFORMANCE DATA - LOW CFM 1-STAGE OPERATION

OUTDOOR UNIT MODEL NO.		CZH06011(C)														
INDOOR COIL MODEL NO.		FC62D + MV20D														
CONDENSER ENTERING AIR TEMPERATURE	ID CFM	1100					1150					1200				
	ID DB (°F)	80	80	75	80	80	80	80	75	80	80	80	80	75	80	80
	ID WB (°F)	57	62	62	67	72	57	62	62	67	72	57	62	62	67	72
65	T.C.	38.1	44.0	43.9	47.7	52.4	39.7	44.2	44.3	48.1	53.0	41.4	44.3	44.7	48.5	53.5
	S.C.	36.6	35.2	30.2	29.5	24.1	38.2	36.0	30.7	30.2	24.5	39.8	36.8	31.3	30.8	25.0
	K.W.	3.21	1.94	1.95	1.91	1.93	2.79	1.95	1.94	1.92	1.90	2.38	1.95	1.94	1.93	1.88
75	T.C.	37.5	42.0	42.0	45.7	50.2	39.2	42.4	42.3	46.1	50.8	40.8	42.8	42.7	46.5	51.3
	S.C.	36.1	34.5	29.4	28.9	23.4	37.7	35.3	29.9	29.5	23.8	39.2	36.0	30.5	30.1	24.2
	K.W.	3.21	2.36	2.37	2.33	2.34	2.79	2.37	2.36	2.34	2.33	2.38	2.37	2.36	2.35	2.32
85	T.C.	37.0	40.1	40.0	43.8	48.1	38.6	40.7	40.4	44.2	48.6	40.2	41.3	40.7	44.5	49.1
	S.C.	35.6	33.7	28.6	28.3	22.7	37.1	34.5	29.1	28.9	23.1	38.7	35.3	29.7	29.5	23.5
	K.W.	3.21	2.78	2.79	2.75	2.76	2.79	2.78	2.79	2.76	2.75	2.37	2.79	2.79	2.78	2.75
95	T.C.	36.5	38.2	38.1	41.9	45.9	38.1	39.0	38.4	42.2	46.4	39.7	39.8	38.7	42.5	46.9
	S.C.	35.0	33.0	27.8	27.7	22.0	36.6	33.8	28.3	28.3	22.4	38.1	34.5	28.9	28.8	22.7
	K.W.	3.21	3.20	3.20	3.17	3.18	2.79	3.20	3.21	3.19	3.18	2.37	3.21	3.21	3.20	3.18
105	T.C.	34.2	35.5	35.3	38.8	42.7	35.4	36.1	35.6	39.1	43.1	36.5	36.7	35.8	39.3	43.5
	S.C.	32.9	31.4	26.3	26.4	20.7	34.0	32.1	26.9	26.9	21.1	35.2	32.7	27.4	27.4	21.5
	K.W.	3.77	3.76	3.76	3.74	3.74	3.49	3.76	3.76	3.75	3.74	3.21	3.76	3.76	3.76	3.74
115	T.C.	32.0	32.9	32.6	35.8	39.7	32.8	33.3	32.9	36.0	39.9	33.5	33.7	33.1	36.3	40.2
	S.C.	30.9	29.9	25.0	25.1	19.4	31.6	30.5	25.5	25.5	19.8	32.3	31.0	26.0	26.0	20.2
	K.W.	4.31	4.30	4.30	4.29	4.29	4.17	4.30	4.30	4.29	4.29	4.03	4.30	4.30	4.30	4.29
125	T.C.	29.9	30.3	30.0	32.7	36.6	30.2	30.5	30.1	33.0	36.7	30.5	30.6	30.3	33.2	36.9
	S.C.	28.8	28.4	23.6	23.8	18.1	29.1	28.9	24.1	24.2	18.5	29.4	29.3	24.6	24.6	19.0
	K.W.	4.85	4.83	4.85	4.84	4.84	4.84	4.84	4.84	4.84	4.84	4.84	4.84	4.84	4.84	4.84

NOTE: ALL CAPACITIES INCLUDE INDOOR FAN HEAT. KW VALUES ARE FOR THE SYSTEM (OUTDOOR + INDOOR).

Multipliers for determining the performance with other indoor sections.

NOTE: For dry bulb temperatures different than those listed (between 73-87 °F), sensible capacity increases by 1060 BTUH per 1000 CFM per degree above the listed temperature and decreases by 1060 BTUH per 1000 CFM per degree below the listed temperature.

LOW CFM

Air Handlers	Coils	T.C.	S.C.	KW
–	FC/MC62	1.02	0.98	1.11
AHE60D	–	1.00	1.00	1.04
AHX60	–	0.99	0.95	1.04
AV*60	–	0.99	0.95	1.04
F4FV060	–	0.99	0.99	1.02
MV20D	FC/MC60D	0.95	0.95	1.00
MV20D	FC/MC62D	1.00	1.00	1.00
MV20D	FC64D	1.02	0.99	1.02
MX20D	FC/MC60D	1.04	1.08	1.05
MX20D	FC/MC62D	1.04	1.08	1.05
MX20D	FC64D	1.06	1.12	1.08

Furnaces	Coils	T.C.	S.C.	KW
T*(8,L)C*C20	FC/PC60C	0.95	0.90	1.00
T*(8,L)C*C20	UC60C	0.91	0.86	1.01
T*(8,L)C*C20	HD60	0.96	0.90	1.02
T*(8,L)V*C16	FC64D	1.01	0.99	1.00
T*(8,L)V*C20	FC/PC60C	0.95	0.90	1.00
T*(8,L)V*C20	UC60C	0.91	0.86	1.01
T*(8,L)X*C16	FC/PC60C	0.97	0.95	1.03
T*(8,L)X*C16	FC64D	1.01	0.99	1.00
T*(8,L)X*C16	UC60C	0.94	0.92	1.03
T*(8,L)X*C20	FC/MC/PC60D	0.93	0.86	1.02
T*(8,L)X*C20	FC/MC62D	0.91	0.85	1.01
T*(8,L)X*C20	FC/PC60C	0.93	0.86	1.02
T*(8,L)X*C20	FC64D	0.95	0.90	0.98
T*(8,L)X*C20	UC60C	0.90	0.82	1.01

Furnaces	Coils	T.C.	S.C.	KW
T*(8,L)X*C20	UC60D	0.90	0.82	1.01
T*9(C,V)*C20	FC/PC60C	0.95	0.90	1.02
T*9(C,V)*C20	UC60C	0.91	0.86	1.03
T*9(C,V)*D20	FC/MC62D	0.96	0.92	1.02
T*9(C,V)*D20	UC60D	0.91	0.87	1.03
T*9X*C16	FC64D	1.01	0.99	1.01
T*9X*C20	FC/MC/PC60D	1.00	1.00	1.03
T*9X*C20	FC/MC62D	1.00	1.00	1.03
T*9X*C20	FC/PC60C	0.95	0.96	1.02
T*9X*C20	FC64D	1.03	1.04	1.02
T*9X*C20	UC60C	0.97	0.97	1.05
T*9X*C20	UC60D	0.97	0.97	1.05
T*9X*D20	FC/MC/PC60D	1.00	1.02	1.03
T*9X*D20	FC/MC62D	0.96	0.95	1.02
T*9X*D20	FC64D	1.05	1.06	1.02
T*9X*D20	UC60D	0.91	0.92	1.03
Y*(8,L)C*C16	FC64D	1.01	0.99	1.00
Y*(8,L)C*C20	FC/PC60C	0.95	0.90	1.00
Y*(8,L)C*C20	UC60C	0.91	0.86	1.01
Y*9C*C16	FC64D	1.01	0.99	1.01
Y*9C*C20	FC/PC60C	0.95	0.90	1.02
Y*9C*C20	FC64D	1.00	0.97	1.01
Y*9C*C20	UC60C	0.91	0.86	1.03
Y*9C*D20	FC/MC62D	0.96	0.92	1.02
Y*9C*D20	FC64D	1.01	0.99	1.01
Y*9C*D20	UC60D	0.91	0.87	1.03

COOLING PERFORMANCE DATA - HIGH CFM 2-STAGE OPERATION

OUTDOOR UNIT MODEL NO.	CZH06011(C)															
INDOOR COIL MODEL NO.	FC62D + MV20D															
CONDENSER ENTERING AIR TEMPERATURE	ID CFM	1750					1850					1950				
	ID DB (°F)	80	80	75	80	80	80	80	75	80	80	80	80	75	80	80
	ID WB (°F)	57	62	62	67	72	57	62	62	67	72	57	62	62	67	72
65	T.C.	57.1	61.1	60.6	66.2	71.1	58.0	61.4	61.2	66.8	72.2	58.8	61.6	61.8	67.3	73.3
	S.C.	55.8	51.5	42.8	42.9	34.9	56.6	52.4	44.3	43.9	35.1	57.3	53.3	45.7	44.8	35.3
	K.W.	3.20	3.25	3.25	3.32	3.36	3.27	3.32	3.31	3.39	3.44	3.36	3.40	3.38	3.47	3.53
75	T.C.	55.3	58.5	58.0	63.4	68.2	56.0	58.8	58.4	63.9	68.9	56.7	59.1	58.7	64.3	69.5
	S.C.	54.0	50.4	42.1	41.8	33.3	54.7	51.3	43.1	42.8	33.4	55.3	52.3	43.9	43.7	33.5
	K.W.	3.69	3.74	3.74	3.80	3.86	3.77	3.80	3.79	3.87	3.93	3.85	3.88	3.86	3.95	4.01
85	T.C.	53.6	55.9	55.4	60.6	65.3	54.1	56.2	55.5	60.9	65.5	54.6	56.5	55.6	61.2	65.8
	S.C.	52.3	49.2	41.5	40.8	31.8	52.8	50.2	41.8	41.7	31.8	53.3	51.3	42.2	42.5	31.7
	K.W.	4.19	4.22	4.22	4.29	4.35	4.26	4.29	4.28	4.35	4.41	4.34	4.37	4.35	4.43	4.49
95	T.C.	51.8	53.3	52.8	57.8	62.4	52.2	53.6	52.7	58.0	62.2	52.6	53.9	52.5	58.2	62.0
	S.C.	50.5	48.0	40.8	39.8	30.2	50.9	49.2	40.6	40.6	30.1	51.3	50.2	40.4	41.4	29.9
	K.W.	4.69	4.71	4.70	4.77	4.84	4.76	4.77	4.76	4.83	4.90	4.83	4.85	4.83	4.91	4.97
105	T.C.	48.6	49.8	49.3	53.9	58.3	49.1	50.1	49.3	54.1	58.2	49.5	50.4	49.2	54.2	58.1
	S.C.	47.5	45.8	38.9	38.2	28.9	47.9	46.7	39.0	38.9	28.9	48.3	47.5	39.1	39.6	28.9
	K.W.	5.39	5.40	5.38	5.46	5.54	5.46	5.47	5.44	5.53	5.60	5.54	5.55	5.52	5.60	5.68
115	T.C.	45.6	46.3	46.0	50.2	54.3	46.1	46.7	46.0	50.3	54.3	46.5	47.1	46.0	50.4	54.2
	S.C.	44.5	43.6	37.0	36.6	27.6	45.0	44.3	37.4	37.3	27.8	45.4	44.9	37.8	37.9	27.9
	K.W.	6.06	6.07	6.04	6.13	6.22	6.14	6.14	6.11	6.20	6.28	6.23	6.22	6.19	6.28	6.36
125	T.C.	42.6	42.8	42.6	46.4	50.3	43.1	43.3	42.7	46.5	50.4	43.5	43.7	42.7	46.5	50.4
	S.C.	41.6	41.4	35.1	35.1	26.2	42.1	41.9	35.8	35.7	26.6	42.5	42.3	36.5	36.2	27.0
	K.W.	6.74	6.75	6.71	6.80	6.89	6.82	6.82	6.78	6.87	6.96	6.91	6.90	6.86	6.96	7.04

NOTE: ALL CAPACITIES INCLUDE INDOOR FAN HEAT. KW VALUES ARE FOR THE SYSTEM (OUTDOOR + INDOOR).

Multipliers for determining the performance with other indoor sections.

NOTE: For dry bulb temperatures different than those listed (between 73-87 °F), sensible capacity increases by 1060 BTUH per 1000 CFM per degree above the listed temperature and decreases by 1060 BTUH per 1000 CFM per degree below the listed temperature.

HIGH CFM

Air Handlers	Coils	T.C.	S.C.	KW
–	FC/MC62	0.98	0.95	1.05
AHE60D	–	1.00	1.01	1.02
AHX60	–	0.97	0.94	1.04
AV*60	–	0.97	0.91	1.02
F4FV060	–	0.96	0.96	0.99
MV20D	FC/MC60D	0.96	0.96	0.99
MV20D	FC/MC62D	1.00	1.00	1.00
MV20D	FC64D	1.02	0.96	0.98
MX20D	FC/MC60D	1.00	1.00	0.98
MX20D	FC/MC62D	1.00	1.00	0.98
MX20D	FC64D	1.03	1.04	1.00

Furnaces	Coils	T.C.	S.C.	KW
T*(8,L)C*C20	FC/PC60C	0.95	0.87	1.01
T*(8,L)C*C20	UC60C	0.92	0.82	1.01
T*(8,L)C*C20	HD60	0.96	0.85	1.00
T*(8,L)V*C16	FC64D	1.01	0.96	0.98
T*(8,L)V*C20	FC/PC60C	0.95	0.87	1.01
T*(8,L)V*C20	UC60C	0.92	0.82	1.01
T*(8,L)X*C16	FC/PC60C	0.96	0.88	1.00
T*(8,L)X*C16	FC64D	1.01	0.96	0.98
T*(8,L)X*C16	UC60C	0.94	0.86	1.00
T*(8,L)X*C20	FC/MC/PC60D	0.97	0.88	0.99
T*(8,L)X*C20	FC/MC62D	0.98	0.93	1.00
T*(8,L)X*C20	FC/PC60C	0.97	0.88	0.99
T*(8,L)X*C20	FC64D	1.02	0.97	0.98
T*(8,L)X*C20	UC60C	0.96	0.86	1.00

Furnaces	Coils	T.C.	S.C.	KW
T*(8,L)X*C20	UC60D	0.96	0.86	1.00
T*9(C,V)*C20	FC/PC60C	0.94	0.85	1.03
T*9(C,V)*C20	UC60C	0.91	0.81	1.02
T*9(C,V)*D20	FC/MC62D	0.95	0.86	1.01
T*9(C,V)*D20	UC60D	0.92	0.82	1.03
T*9X*C16	FC64D	1.01	0.96	0.98
T*9X*C20	FC/MC/PC60D	0.97	0.89	0.99
T*9X*C20	FC/MC62D	0.97	0.90	0.99
T*9X*C20	FC/PC60C	0.94	0.88	1.03
T*9X*C20	FC64D	1.01	0.95	0.98
T*9X*C20	UC60C	0.95	0.88	0.99
T*9X*C20	UC60D	0.95	0.88	0.99
T*9X*D20	FC/MC/PC60D	0.97	0.91	0.99
T*9X*D20	FC/MC62D	0.95	0.89	1.01
T*9X*D20	FC64D	1.02	0.96	0.99
T*9X*D20	UC60D	0.92	0.87	1.03
Y*(8,L)C*C16	FC64D	1.01	0.96	0.98
Y*(8,L)C*C20	FC/PC60C	0.95	0.87	1.01
Y*(8,L)C*C20	UC60C	0.92	0.82	1.01
Y*9C*C16	FC64D	1.01	0.96	1.01
Y*9C*C20	FC/PC60C	0.94	0.85	1.03
Y*9C*C20	FC64D	1.01	0.96	1.01
Y*9C*C20	UC60C	0.91	0.81	1.02
Y*9C*D20	FC/MC62D	0.95	0.86	1.01
Y*9C*D20	FC64D	1.01	0.96	1.01
Y*9C*D20	UC60D	0.92	0.82	1.03

Subject to change without notice. Published in U.S.A.
Copyright © 2012 by Johnson Controls, Inc. All rights reserved.

561926-YTG-B-0512
Supersedes: 561926-YTG-A-0410

York International Corp.
5005 York Drive
Norman, OK 73069