YORK®
Heating and Air Conditioning

TECHNICAL GUIDE

AFFINITY™ SERIES
SPLIT SYSTEM AIR CONDITIONERS
16 SEER – R-410A – 1 PHASE
2 THRU 5 NOMINAL TONS
MODELS: CZF024 THRU 060

Due to continuous product improvement, specifications are subject to change without notice.

Visit us on the web at
www.upgnet.com and www.york.com

Additional rating information can be found at
www.ahridirectory.org

WARRANTY SUMMARY*

Extended 10-Years limited parts warranty.
Extended Lifetime limited compressor warranty.

Extended parts and compressor warranties require online registration within 90 days of purchase for replacement or closing for new home construction.

*Does not apply to R-22 models, 3-Phase models, or internet sales.
See Limited Warranty certificate in User's Information Manual for details.

DESCRIPTION

The 16 SEER Series unit is the outdoor part of a versatile climate system. It is designed with a matching indoor coil component from Johnson Controls Unitary Products. Available for typical applications, this climate system is supported with accessories and documents to serve specific functions.

FEATURES

- **Superior Coil Protection -** A stamped, decorative metal coil guard protects the microchannel coil from debris and other damaging material.
- **Protected Compressor -** The compressor is safeguarded against abnormal pressures and temperatures by an internal pressure relief valve, an internal temperature sensor, and factory high and low pressure system controls. A factory installed liquid line filter-drier further protects the compressor against moisture and debris.
- **Environmentally Friendly Refrigerant -** The next generation refrigerant R-410A delivers environmentally friendly performance with zero ozone depletion.
- **Durable Finish -** An automotive quality finish provides the ultimate protection from harmful UV rays and rust creep, ensuring a long-lasting, high quality appearance. A powder-paint topcoat is applied over a baked-on primer using a galvanized, zinc coated steel base material. The result is a finish that has been proven in testing to provide 33% greater durability than conventional powder-coat finishes.
- **QuietDrive™ System -** Features combination of swept-wing fan, composite base pan, isolated compressor compartment, and single-stage compressor to reduce overall sound to a mere whisper.
- **Low RPM Fan Motor -** Helps to reduce airflow noise.
- **Swept Wing Fan -** A fan design boasting technology adapted from aeronautic and defense engineering provides for whisper-quiet operation by allowing air to flow smoothly and efficiently across the fan tips.
- **Composite Base Pan -** The strong and durable composite base pan provides added strength while resisting rust and corrosion, as well as reducing sound and vibration.
- **Isolated Compressor Compartment -** A molded composite bulkhead isolates the refrigeration components and the compressor from the rest of the unit, reducing sound and vibration.
- **Lower Installed Cost -** Designed to provide enhanced installability by featuring a slide-down control compartment that allows easy access to control components, along with angled service valves to reduce overall installation time and cost. Factory charged for a 15 foot lineset.
- **Factory Installed Filter-Drier -** A factory installed, solid core liquid line filter-drier removes harmful debris and moisture from the system.
- **Easy Service Access -** A full end, full service access panel with handle makes for easy entry to internal components.
- **Communications Capable -** Requiring only a simple 4-wire installation, the communicating capability enables the use of the Touch Screen Communicating Control, allowing real time visibility of system operation and the use of diagnostic features, while still maintaining the ability to function with a traditional thermostat.
- **Premium System Warranty* -** Limited lifetime compressor warranty when registered online within 90 days of installation.
- **Agency Listed -** Safety certified by CSA to UL 1995 / CSA 22.2. Performance certified to ANSI/AHRI Standard 210/240 in accordance with the Unitary Small Equipment certification program.

Physical and Electrical Data

MODEL		CZF02413(C)	CZF03013(C)	CZF03613(C)	CZF04213(C)	CZF04814(C)	CZF06013(C)
Unit Supply Voltage		208-230V, 1ϕ, 60Hz					
Normal Voltage Range [1]		187 to 252					
Minimum Circuit Ampacity		17.3	18.1	22.9	23.7	26.1	29.5
Max. Overcurrent Device Amps [2]		30	30	40	40	45	50
Min. Overcurrent Device Amps [3]		20	20	25	25	30	40
Compressor Type		Scroll	Scroll	Scroll	Scroll	Scroll	Scroll
Compressor Amps	Rated Load	13.4	14.1	17.3	17.9	19.9	21.4
	Locked Rotor	58	73	97	112	109	135
Crankcase Heater		No	No	No	No	No	No
Factory External Discharge Muffler		No	No	No	No	No	No
Factory External Check Valve		No	No	No	No	No	No
HS Kit Required with TXV [4]		No	No	No	No	No	No
Fan Motor Amps	Rated Load	0.5	0.5	1.3	1.3	1.3	2.8
Fan Diameter Inches		22	22	22	22	24	24
Fan Motor	Rated HP	1/15	1/15	1/4	1/4	1/4	1/3
	Nominal RPM	850	850	850	850	850	915
	Nominal CFM	2020	2045	3240	3300	3800	3900
Coil	Face Area Sq. Ft.	14.1	14.0	16.1	19.3	22.8	22.8
	Rows Deep	1	1	1	1	1	1
	Fins / Inch	23	23	23	23	23	23
Liquid Line Set OD (Field Installed)		3/8	3/8	3/8	3/8	3/8	3/8
Vapor Line Set OD (Field Installed)		3/4	3/4	3/4	7/8	7/8	1-1/8
Unit Charge (Lbs. - Oz.) [5]		3 - 12	4 - 6	5 - 0	6 - 4	7 - 5	6 -14
Charge Per Foot, Oz.		0.62	0.62	0.62	0.67	0.67	0.75
Operating Weight Lbs.		159	166	192	209	250	235

1. Rated in accordance with AHRI Standard 110-2012, utilization range “A”.
2. Dual element fuses or HACR circuit breaker. Maximum allowable overcurrent protection.
3. Dual element fuses or HACR circuit breaker. Minimum recommended overcurrent protection.
4. See Hard Start Kit Accessory Installation Manual for Hard Start Kit part number for each model.
5. The Unit Charge is correct for the outdoor unit, smallest matched indoor unit, and 15 feet of refrigerant tubing. For tubing lengths other than 15 feet, add or subtract the amount of refrigerant, using the difference in length multiplied by the per foot value.

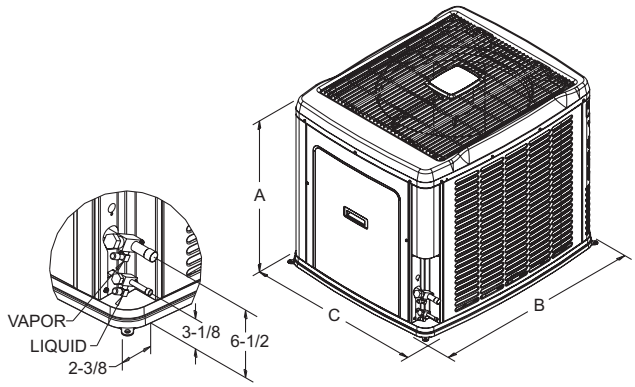

Unit Model	Dimensions (Inches)			Refrigerant Connection Service Valve Size	
	A	B	C	Liquid	Vapor
024	30	37	31	3/8	3/4
030	30	37	31		
036	34	37	31		
042	40	37	31		7/8
048	40	42-1/4	34		
060	40	42-1/4	34		7/8 *

* Adapter fitting required for 1-1/8” line set.

All dimensions are in inches and are subject to change without notice.
Overall height is from bottom of basepan to top of fan guard.
Overall length and width include screw heads.

System Charge for Various Matched Systems						
Outdoor Unit	CZF02413(C)	CZF03013(C)	CZF03613(C)	CZF04213(C)	CZF04814(C)	CZF06013(C)
Required TXV [1,2]	4F1	4F1	4F1	4N1	4N1	4H1
Indoor Unit [3,4,5]	Additional Charge, Oz					
AHE24B	9	–	–	–	–	–
AHE30B	9	0	–	–	–	–
AHE36C	15	6	0	–	–	–
AHE42D	–	9	3	3	–	–
AHE48D	–	13	7	7	4	–
AHE60D	–	–	12	12	9	4
AHR24B	9	–	–	–	–	–
AHR30B	–	0	–	–	–	–
AHR36B	–	6	0	–	–	–
AHR42C	–	–	3	3	–	–
AHR48D	–	–	–	7	4	–
AHR60D	–	–	–	12	9	4
AHV24B	9	–	–	–	–	–
AHV30B	9	0	–	–	–	–
AHV36C	16	6	0	–	–	–
AHV42D	–	16	10	8	–	–
AHV48D	–	–	10	7	4	–
AHV60D	–	–	–	12	9	2
AV*36	15	6	0	–	–	–
AV*48	–	–	7	7	4	–
AV*60	–	–	–	7	4	0
FC/MC/PC32	9	0	–	–	–	–
FC/MC/PC35	9	0	–	–	–	–
FC/MC/PC37	15	6	0	–	–	–
FC/MC/PC43	15	6	0	0	–	–
FC/MC/PC48	–	9	3	3	0	–
FC/MC/PC60	–	13	7	7	4	0
FC/MC62	–	–	12	12	9	4
FC64	–	–	18	18	15	11
HD48	–	–	3	3	–	–
HD60	–	–	7	7	4	–
UC48	–	9	3	–	2	–
UC60	–	13	7	7	5	–
Some of the combinations shown in the above System Charge table require Advanced Main Air Circulating Fan indoor product. For approved coil only matches, please see the “COOLING CAPACITY - Upflow, Downflow & Horizontal Furnaces and Coils” table.						

FOOTNOTES:

1. For applications requiring a TXV use S1-1TVM*** series kit.
2. A TXV kit must be used with these indoor units to obtain system performance.
3. Systems matched with furnaces or air handlers not equipped with blower-off delays may require blower Time Delay Kit S1-2FD06700224.
4. PC coils cannot be used in downflow or horizontal applications. FC coils cannot be used in horizontal applications.
5. Refer to Cooling Performance Data tables for actual system performance for specified system matches.

PROCEDURES:

1. Unit factory charge listed on the unit nameplate includes refrigerant for the outdoor unit, the smallest matched indoor unit, and 15 feet of interconnecting line tubing.
2. Verify the TXV and additional charge required for specific matched indoor unit in the system using the above table.
3. Add additional charge for the amount of interconnecting line tubing greater than 15 feet at the rate specified in Physical and Electrical Data Table.
4. For indoor matches requiring additional charge, the refrigerant needs to be weighed in for specific matched indoor unit and lineset length.
5. Permanently mark the unit nameplate with the total system charge. Total System Charge = Base Charge (as shipped) + charge adder for matched indoor unit + charge adder for line set.

COOLING CAPACITY - With Air Handler Coils

UNIT MODEL	AIR HANDLER		COIL MODEL[1]	COOLING				
	MODEL	WIDTH		RATED CFM	NET MBH		SEER	EER
					TOTAL	SENS.		
16 SEER AC WITH AIR HANDLERS								
CZF02413(C)	AHE24B	17.5	–	795	24.8	17.0	16.75	13.50
	AHE30B	17.5	–	795	24.8	17.0	16.75	13.50
	AHE36C	21.0	–	855	25.4	18.0	17.50	14.00
	AHR24B	17.5	–	740	23.6	16.6	15.00	12.75
	AHV24B	17.5	–	710	23.8	16.0	16.25	13.25
	AHV30B	17.5	–	775	24.0	16.5	16.25	13.25
	AHV36C	21.0	–	760	24.2	16.6	16.75	13.75
	AV*36	21.0	–	725	24.8	16.7	17.25	14.00
	MV12B	17.5	FC/MC35B	800	24.8	17.1	17.00	13.75
	MV12B	17.5	FC/MC43B	800	25.0	17.2	17.00	13.75
	MX12B	17.5	FC/MC35B	815	25.0	17.0	17.50	14.00
	MX12B	17.5	FC/MC43B	735	24.8	16.8	17.50	14.00
CZF03013(C)	AHE30B	17.5	–	985	30.0	20.6	15.75	12.75
	AHE36C	21.0	–	1000	30.8	21.2	16.50	13.50
	AHE42D	24.5	–	1000	31.2	21.6	17.00	13.75
	AHE48D	24.5	–	1000	30.8	21.4	16.75	13.75
	AHR30B	17.5	–	1115	30.0	21.6	14.00	12.00
	AHR36B	17.5	–	1060	30.4	21.6	14.25	12.25
	AHV30B	17.5	–	1000	29.6	20.2	15.00	12.50
	AHV36C	21.0	–	895	29.8	20.0	16.25	13.25
	AHV42D	24.5	–	1080	30.4	21.6	16.50	13.50
	AV*36	21.0	–	960	30.6	21.0	16.25	13.50
	MV12B	17.5	FC/MC35B	1010	29.8	20.5	15.75	13.00
	MV12B	17.5	FC/MC43B	990	30.6	21.1	16.25	13.25
	MV16C	21.0	FC/MC35C	1070	30.2	21.3	16.00	13.00
	MV16C	21.0	FC/MC43C	1000	30.8	21.2	16.25	13.25
	MV16C	21.0	FC/MC48C	1000	31.0	21.4	16.50	13.50
	MX12B	17.5	FC/MC35B	1085	30.6	21.6	16.25	13.00
	MX12B	17.5	FC/MC43B	1095	31.2	22.0	16.50	13.50
	MX16C	21.0	FC/MC35C	1035	30.4	20.8	16.75	13.50
	MX16C	21.0	FC/MC43C	970	30.8	21.2	17.00	13.75
	MX16C	21.0	FC/MC48C	995	31.2	21.4	17.00	13.75
CZF03613(C)	AHE36C	21.0	–	1190	35.8	26.6	16.00	13.00
	AHE42D	24.5	–	1180	36.2	26.8	16.25	13.50
	AHE48D	24.5	–	1195	36.0	26.6	16.25	13.50
	AHE60D	24.5	–	1190	36.4	27.0	16.50	13.75
	AHR36B	17.5	–	1245	34.8	25.8	13.75	12.00
	AHR42C	21.0	–	1230	35.6	26.6	14.25	12.50
	AHV36C	21.0	–	1215	35.6	26.3	15.50	12.75
	AHV42D	24.5	–	1180	35.8	26.4	16.00	13.25
	AHV48D	24.5	–	1155	35.4	25.9	16.00	13.25
	AV*36	21.0	–	1190	35.8	26.8	16.00	13.00
	AV*48	24.5	–	1220	36.4	27.4	16.50	13.50
	MV12B	17.5	FC/MC43B	1225	36.0	26.6	15.75	13.00
	MV12D	24.5	FC/MC48D	1160	36.6	26.8	16.50	13.75
	MV12D	24.5	FC/MC60D	1135	36.0	26.4	16.00	13.25
	MV12D	24.5	FC/MC62D	1155	36.6	27.2	16.75	13.75
	MV12D	24.5	FC64D	1155	37.0	27.8	17.00	14.00
	MV16C	21.0	FC/MC43C	1190	36.0	26.6	16.00	13.25
	MV16C	21.0	FC/MC48C	1200	36.2	26.8	16.25	13.25

For Notes See Page 6.

COOLING CAPACITY - With Air Handler Coils (Continued)

UNIT MODEL	AIR HANDLER		COIL MODEL[1]	COOLING				
	MODEL	WIDTH		RATED CFM	NET MBH		SEER	EER
					TOTAL	SENS.		
16 SEER AC WITH AIR HANDLERS								
CZF03613(C)	MV20D	24.5	FC/MC48D	1300	36.8	28.0	16.25	13.50
	MV20D	24.5	FC/MC60D	1300	36.4	27.4	16.25	13.50
	MV20D	24.5	FC/MC62D	1300	36.8	28.0	16.50	13.50
	MV20D	24.5	FC64D	1300	37.2	28.8	16.75	14.00
	MX12B	17.5	FC/MC43B	1220	35.8	26.6	15.50	12.75
	MX12D	24.5	FC/MC48D	1225	36.4	26.6	16.00	13.25
	MX12D	24.5	FC/MC60D	1275	36.6	27.4	16.25	13.50
	MX12D	24.5	FC/MC62D	1270	36.8	27.8	16.75	13.75
	MX12D	24.5	FC64D	1270	37.8	29.2	17.25	14.25
	MX16C	21.0	FC/MC43C	1140	35.8	26.2	16.25	13.50
	MX16C	21.0	FC/MC48C	1150	36.6	26.8	16.50	13.75
	MX20D	24.5	FC/MC60D	1295	36.8	27.8	16.75	13.75
	MX20D	24.5	FC/MC62D	1260	36.8	27.8	16.75	13.75
	MX20D	24.5	FC64D	1260	37.8	29.0	17.25	14.25
CZF04213(C)	AHE42D	24.5	–	1385	40.5	30.4	15.50	13.00
	AHE48D	24.5	–	1385	42.0	31.2	15.75	13.25
	AHE60D	24.5	–	1390	42.5	32.0	16.25	13.75
	AHR42C	21.0	–	1485	40.0	30.2	13.75	11.75
	AHR48D	24.5	–	1320	41.0	29.8	14.00	11.75
	AHR60D	24.5	–	1350	41.5	30.8	14.50	12.25
	AHV42D	24.5	–	1385	41.0	29.9	16.00	13.00
	AHV48D	24.5	–	1300	41.0	29.4	16.00	13.00
	AHV60D	24.5	–	1340	41.5	30.4	16.00	13.00
	AV*48	24.5	–	1385	42.0	31.0	16.00	13.25
	AV*60	24.5	–	1360	42.0	31.0	16.00	13.25
	MV16C	21.0	FC/MC43C	1380	40.0	29.6	15.00	12.75
	MV16C	21.0	FC/MC48C	1400	40.5	29.6	15.25	13.00
	MV16C	21.0	FC60C	1400	42.0	30.8	15.50	13.00
	MV20D	24.5	FC/MC48D	1470	41.0	31.2	15.75	13.25
	MV20D	24.5	FC/MC60D	1400	42.0	30.8	15.75	13.25
	MV20D	24.5	FC/MC62D	1450	42.5	32.0	16.00	13.25
	MV20D	24.5	FC64D	1400	43.0	32.4	16.50	13.75
	MX16C	21.0	FC/MC43C	1365	40.0	29.8	15.00	12.75
	MX16C	21.0	FC/MC48C	1390	40.5	29.8	15.75	13.50
	MX16C	21.0	FC60C	1420	42.5	31.6	16.00	13.25
	MX20D	24.5	FC/MC48D	1415	40.5	30.6	15.75	13.25
	MX20D	24.5	FC/MC60D	1470	43.0	32.4	16.25	13.50
	MX20D	24.5	FC/MC62D	1470	43.5	32.8	16.25	13.75
	MX20D	24.5	FC64D	1470	44.5	34.2	16.75	14.00
CZF04814(C)	AHE48D	24.5	–	1600	46.5	33.2	15.00	13.00
	AHE60D	24.5	–	1565	47.0	34.0	15.50	13.25
	AHR48D	24.5	–	1610	46.0	32.6	13.75	12.00
	AHR60D	24.5	–	1620	47.0	34.0	14.25	12.50
	AHV48D	24.5	–	1585	46.5	32.8	15.00	12.75
	AHV60D	24.5	–	1570	47.0	33.6	15.00	13.00
	AV*48	24.5	–	1625	47.0	33.4	15.25	13.00
	AV*60	24.5	–	1560	47.5	33.6	15.50	13.25
	MV16C	21.0	FC/MC48C	1625	47.0	33.4	15.00	13.00
	MV16C	21.0	FC60C	1625	46.5	32.8	14.75	12.75
	MV20D	24.5	FC/MC48D	1620	47.0	33.6	15.25	13.25
	MV20D	24.5	FC/MC60D	1600	46.5	32.8	14.75	12.75

For Notes See Page 6.

COOLING CAPACITY - With Air Handler Coils (Continued)

UNIT MODEL	AIR HANDLER		COIL MODEL[1]	COOLING				
	MODEL	WIDTH		RATED CFM	NET MBH		SEER	EER
					TOTAL	SENS.		
16 SEER AC WITH AIR HANDLERS								
CZF04814(C)	MV20D	24.5	FC/MC62D	1630	47.0	34.0	15.25	13.25
	MV20D	24.5	FC64D	1400	48.0	33.4	16.00	13.75
	MX16C	21.0	FC/MC48C	1685	47.5	34.4	15.00	13.00
	MX16C	21.0	FC60C	1630	47.0	33.2	15.50	13.25
	MX20D	24.5	FC/MC48D	1525	47.5	33.6	15.50	13.25
	MX20D	24.5	FC/MC60D	1585	47.0	33.2	15.50	13.25
	MX20D	24.5	FC/MC62D	1605	47.5	34.2	15.75	13.50
	MX20D	24.5	FC64D	1470	48.5	34.4	16.50	14.25
CZF06013(C)	AHE60D	24.5	–	1835	53.5	38.0	15.25	13.00
	AHR60D	24.5	–	1870	52.0	36.2	13.75	12.00
	AHV60D	24.5	–	1635	51.5	36.1	14.75	12.50
	AV*60	24.5	–	1730	52.5	36.4	15.25	12.75
	MV20D	24.5	FC/MC60D	1845	53.0	37.3	15.00	12.75
	MV20D	24.5	FC/MC62D	1855	53.5	38.0	15.00	12.75
	MV20D	24.5	FC64D	1705	54.5	39.0	16.00	13.50
	MX20D	24.5	FC/MC60D	1780	53.0	37.5	15.50	13.00
	MX20D	24.5	FC/MC62D	1795	54.0	38.5	15.75	13.25
	MX20D	24.5	FC64D	1795	55.0	40.0	16.25	13.50

Rated in accordance with DOE test procedures (Federal Register 12-27-79 and 3-18-88) and ANSI/AHRI Standard 210/240.

Cooling MBH based on 80°F entering air temperature, 50% RH (Relative Humidity), and rated air flow.

EER (Energy Efficiency Ratio) is the total cooling output in BTUs at 95°F outdoor ambient divided by the total electric power in watt-hours at those conditions.

SEER (Seasonal Energy Efficiency Ratio) is the total cooling output in BTUs during a normal annual usage period for cooling divided by the total electric power input in watt-hours during the same period.

1. MC coils available with a factory installed horizontal drain pan. See price pages for specific model number.

— = Not applicable.

MA Modular Air Handlers use Coil Only Ratings.

COOLING CAPACITY - Upflow, Downflow & Horizontal Furnaces and Coils (Coil Only Ratings)

UNIT MODEL	COIL		CFM RANGE (MIN.-MAX.)	COOLING				
	MODEL	WIDTH		RATED CFM	NET MBH		SEER[1,2]	EER
					TOTAL	SENS.		
16 SEER AC COIL ONLY RATINGS								
CZF02413(C)	FC/MC/PC32	14.5	600-1000	800	23.6	17.0	14.50	12.25
	FC/MC/PC35	17.5,21.0	600-1000	800	23.6	17.0	14.50	12.25
	FC/MC/PC37	14.5	600-1000	800	24.0	17.3	14.50	12.25
	FC/MC/PC43	17.5,21.0	600-1000	800	24.0	17.3	14.50	12.25
CZF03013(C)	FC/MC/PC32	14.5	800-1200	1000	29.6	20.6	14.00	12.00
	FC/MC/PC35	17.5,21.0	800-1200	1000	29.6	20.6	14.00	12.00
	FC/MC/PC37	14.5	800-1200	1000	30.0	21.0	14.25	12.25
	FC/MC/PC43	17.5,21.0	800-1200	1000	30.0	21.0	14.25	12.25
	FC/MC/PC48	21.0,24.5	800-1200	1000	30.0	21.4	14.25	12.25
	FC/MC/PC60	21.0,24.5	800-1200	1000	30.0	21.2	14.25	12.25
	UC48	21.0,24.5	800-1200	1000	28.6	20.0	13.75	11.75
	UC60	21.0,24.5	800-1200	1000	28.8	19.9	13.75	11.75
CZF03613(C)	FC/MC/PC37	14.5	1000-1400	1200	35.0	26.0	14.00	12.25
	FC/MC/PC43	17.5,21.0	1000-1400	1200	35.0	26.0	14.00	12.25
	FC/MC/PC48	21.0,24.5	1000-1400	1200	35.0	26.0	14.00	12.25
	FC/MC/PC60	21.0,24.5	1000-1400	1200	35.0	26.0	14.00	12.25
	FC/MC62	24.5	1000-1400	1200	35.4	26.0	14.00	12.25
	FC64	24.5	1000-1400	1200	36.4	27.4	14.50	12.50
	HD48	–	1000-1400	1200	35.0	25.8	14.00	12.25
	HD60	–	1000-1400	1200	35.4	26.0	14.00	12.25
	UC48	21.0,24.5	1000-1400	1200	34.6	25.8	13.75	12.00
	UC60	21.0,24.5	1000-1400	1200	34.6	25.4	13.75	12.00
CZF04213(C)	FC/MC/PC60	21.0,24.5	1200-1600	1400	41.5	30.2	14.25	12.00
	FC/MC62	24.5	1200-1600	1400	41.5	30.2	14.50	12.25
	FC64	24.5	1200-1600	1400	42.5	31.8	15.00	12.50
	HD60	–	1200-1600	1400	42.0	30.8	14.25	12.25
	UC60	21.0,24.5	1200-1600	1400	40.5	29.6	13.75	11.75
CZF04814(C)	FC/MC/PC48	21.0,24.5	1400 - 1800	1600	46.5	33.0	14.00	12.25
	FC/MC/PC60	21.0,24.5	1400 - 1800	1600	46.0	32.4	13.75	12.00
	FC/MC62	24.5	1400 - 1800	1600	46.5	33.6	14.00	12.25
	FC64	24.5	1400 - 1800	1600	48.0	34.6	14.50	12.75
	HD60	–	1400 - 1800	1600	46.5	33.2	14.00	12.25
	UC48	21.0,24.5	1400 - 1800	1600	46.5	33.0	14.00	12.25
	UC60	21.0,24.5	1400 - 1800	1600	45.5	32.4	13.75	12.00
CZF06013(C)	FC64	24.5	1500-1900	1800	53.5	37.4	14.50	12.50

1. Requires a S1-2FD06700224 Blower Time Delay unless a standard furnace is equipped with one.
2. TXV = Use S1-1TVM series kit.

MA Modular Air Handlers use Coil Only Ratings.

PSC furnaces, such as the TG8S, TGLS, and TG9S, use Coil Only Ratings.

COOLING CAPACITY - With High Efficiency Motor Furnaces

UNIT MODEL	FURNACE		COIL MODEL[1]	COOLING				
	MODEL	WIDTH		RATED CFM	NET MBH		SEER	EER
					TOTAL	SENS.		
16 SEER AC WITH HIGH EFFICIENCY MOTOR FURNACES [2]								
CZF02413(C)	T*(8,L)C*A12	14.0	FC/MC/PC32A	755	24.4	16.6	16.50	13.50
	T*(8,L)C*A12	14.0	FC/MC/PC37A	765	25.0	17.2	16.75	13.50
	T*(8,L)C*B12	17.0	FC/MC/PC35B	785	24.8	16.9	16.75	13.75
	T*(8,L)C*B12	17.0	FC/MC/PC43B	790	25.0	17.2	17.00	13.75
	T*(8,L)C*C16	21.0	FC/MC/PC35C	775	24.8	17.0	17.00	13.75
	T*(8,L)C*C16	21.0	FC/MC/PC43C	770	25.0	17.2	17.25	14.00
	T*(8,L)C*C20	21.0	FC/MC/PC35C	755	24.6	16.7	17.00	13.75
	T*(8,L)C*C20	21.0	FC/MC/PC43C	740	24.8	16.8	17.25	13.75
	T*(8,L)V*A12	14.0	FC/MC/PC32A	755	24.4	16.6	16.50	13.50
	T*(8,L)V*A12	14.0	FC/MC/PC37A	765	25.0	17.2	16.75	13.50
	T*(8,L)V*B12	17.0	FC/MC/PC35B	785	24.8	16.9	16.75	13.75
	T*(8,L)V*B12	17.0	FC/MC/PC43B	790	25.0	17.2	17.00	13.75
	T*(8,L)V*C16	21.0	FC/MC/PC35C	775	24.8	17.0	17.00	13.75
	T*(8,L)V*C16	21.0	FC/MC/PC43C	770	25.0	17.2	17.25	14.00
	T*(8,L)V*C20	21.0	FC/MC/PC35C	755	24.6	16.7	17.00	13.75
	T*(8,L)V*C20	21.0	FC/MC/PC43C	740	24.8	16.8	17.25	13.75
	T*(8,L)X*A12	14.0	FC/MC/PC32A	800	24.8	17.0	17.25	14.00
	T*(8,L)X*A12	14.0	FC/MC/PC37A	840	25.4	17.9	17.75	14.25
	T*(8,L)X*B12	17.0	FC/MC/PC35B	850	25.2	17.7	17.50	14.25
	T*(8,L)X*B12	17.0	FC/MC/PC43B	865	25.6	18.1	17.75	14.25
	T*(8,L)X*C16	21.0	FC/MC/PC35C	865	25.2	17.8	17.50	14.25
	T*(8,L)X*C16	21.0	FC/MC/PC43C	855	25.4	18.1	17.75	14.25
	T*(8,L)X*C20	21.0	FC/MC/PC35C	885	25.2	18.0	17.00	14.00
	T*(8,L)X*C20	21.0	FC/MC/PC43C	815	25.0	17.2	17.25	14.00
	T*9(C,V)*B12	17.0	FC/MC/PC35B	815	24.6	16.9	16.50	13.25
	T*9(C,V)*B12	17.0	FC/MC/PC43B	800	25.0	17.1	16.75	13.50
	T*9(C,V)*C16	21.0	FC/MC/PC35C	900	25.2	18.0	16.75	13.75
	T*9(C,V)*C16	21.0	FC/MC/PC43C	810	25.0	17.2	17.00	13.75
	T*9(C,V)*C20	21.0	FC/MC/PC35C	755	24.6	16.7	16.75	13.75
	T*9(C,V)*C20	21.0	FC/MC/PC43C	890	25.6	18.3	17.00	14.00
	T*9X*A10	14.5	FC/MC/PC32A	745	24.2	16.3	16.00	13.00
	T*9X*A10	14.5	FC/MC/PC37A	740	24.4	16.5	16.25	13.25
	T*9X*B12	17.0	FC/MC/PC35B	785	24.8	17.0	17.25	14.00
	T*9X*B12	17.0	FC/MC/PC43B	800	25.2	17.3	17.50	14.00
	T*9X*C16	21.0	FC/MC/PC35C	765	24.8	17.0	17.25	14.00
	T*9X*C16	21.0	FC/MC/PC43C	785	25.2	17.3	17.50	14.00
	T*9X*C20	21.0	FC/MC/PC35C	825	24.8	17.0	17.00	13.75
	T*9X*C20	21.0	FC/MC/PC43C	790	25.0	17.2	17.25	14.00
	T*9V*A10	14.5	FC/MC/PC32A	785	24.4	16.7	15.75	12.75
	T*9V*A10	14.5	FC/MC/PC37A	790	24.4	17.0	15.75	12.75
	Y*(8,L)C*A12	14.0	FC/MC/PC32A	755	24.4	16.6	16.50	13.50
	Y*(8,L)C*A12	14.0	FC/MC/PC37A	765	25.0	17.2	16.75	13.50
	Y*(8,L)C*B12	17.0	FC/MC/PC35B	785	24.8	16.9	16.75	13.75
	Y*(8,L)C*B12	17.0	FC/MC/PC43B	790	25.0	17.2	17.00	13.75
	Y*(8,L)C*C16	21.0	FC/MC/PC35C	775	24.8	17.0	17.00	13.75
	Y*(8,L)C*C16	21.0	FC/MC/PC43C	770	25.0	17.2	17.25	14.00
	Y*(8,L)C*C20	21.0	FC/MC/PC35C	755	24.6	16.7	17.00	13.75
	Y*(8,L)C*C20	21.0	FC/MC/PC43C	740	24.8	16.8	17.25	13.75
	Y*9C*B12	17.0	FC/MC/PC35B	815	24.6	16.9	16.50	13.25
	Y*9C*B12	17.0	FC/MC/PC43B	800	25.0	17.1	16.75	13.50
	Y*9C*C16	21.0	FC/MC/PC35C	900	25.2	18.0	16.75	13.75
	Y*9C*C16	21.0	FC/MC/PC43C	810	25.0	17.2	17.00	13.75
	Y*9C*C20	21.0	FC/MC/PC35C	755	24.6	16.7	16.75	13.75
	Y*9C*C20	21.0	FC/MC/PC43C	890	25.6	18.3	17.00	14.00

For Notes See Page 19.

COOLING CAPACITY - With High Efficiency Motor Furnaces (Continued)

UNIT MODEL	FURNACE		COIL MODEL[1]	COOLING				
	MODEL	WIDTH		RATED CFM	NET MBH		SEER	EER
					TOTAL	SENS.		
16 SEER AC WITH HIGH EFFICIENCY MOTOR FURNACES [2]								
CZF03013(C)	T*(8,L)C*A12	14.0	FC/MC/PC32A	1035	29.4	20.1	14.25	11.75
	T*(8,L)C*A12	14.0	FC/MC/PC37A	950	30.2	20.6	15.75	12.75
	T*(8,L)C*B12	17.0	FC/MC/PC35B	1020	29.6	20.3	15.00	12.50
	T*(8,L)C*B12	17.0	FC/MC/PC43B	1045	30.6	21.0	15.75	12.75
	T*(8,L)C*C16	21.0	FC/MC/PC35C	985	29.8	20.5	15.25	12.75
	T*(8,L)C*C16	21.0	FC/MC/PC43C	1035	30.8	21.0	16.25	13.25
	T*(8,L)C*C16	21.0	FC/MC/PC48C	1010	31.0	21.4	16.50	13.25
	T*(8,L)C*C16	21.0	FC/PC60C	1050	31.0	21.8	16.50	13.50
	T*(8,L)C*C16	21.0	UC48C	1010	28.6	19.6	15.50	12.50
	T*(8,L)C*C16	21.0	UC60C	995	28.6	19.3	15.75	12.75
	T*(8,L)C*C20	21.0	FC/MC/PC35C	1035	29.6	20.5	15.00	12.50
	T*(8,L)C*C20	21.0	FC/MC/PC43C	1025	30.8	21.2	16.75	13.50
	T*(8,L)C*C20	21.0	FC/MC/PC48C	1030	31.0	21.4	16.50	13.50
	T*(8,L)C*C20	21.0	FC/PC60C	970	31.0	21.3	16.50	13.50
	T*(8,L)C*C20	21.0	UC48C	1040	28.6	19.5	15.50	12.50
	T*(8,L)C*C20	21.0	UC60C	1055	28.6	19.7	15.50	12.75
	T*(8,L)V*A12	14.0	FC/MC/PC32A	1035	29.4	20.1	14.25	11.75
	T*(8,L)V*A12	14.0	FC/MC/PC37A	950	30.2	20.6	15.75	12.75
	T*(8,L)V*B12	17.0	FC/MC/PC35B	1020	29.6	20.3	15.00	12.50
	T*(8,L)V*B12	17.0	FC/MC/PC43B	1045	30.6	21.0	15.75	12.75
	T*(8,L)V*C16	21.0	FC/MC/PC35C	985	29.8	20.5	15.25	12.75
	T*(8,L)V*C16	21.0	FC/MC/PC43C	1035	30.8	21.0	16.25	13.25
	T*(8,L)V*C16	21.0	FC/MC/PC48C	1010	31.0	21.4	16.50	13.25
	T*(8,L)V*C16	21.0	FC/PC60C	1050	31.0	21.8	16.50	13.50
	T*(8,L)V*C16	21.0	UC48C	1010	28.6	19.6	15.50	12.50
	T*(8,L)V*C16	21.0	UC60C	995	28.6	19.3	15.75	12.75
	T*(8,L)V*C20	21.0	FC/MC/PC35C	1035	29.6	20.5	15.00	12.50
	T*(8,L)V*C20	21.0	FC/MC/PC43C	1025	30.8	21.2	16.75	13.50
	T*(8,L)V*C20	21.0	FC/MC/PC48C	1030	31.0	21.4	16.50	13.50
	T*(8,L)V*C20	21.0	FC/PC60C	970	31.0	21.3	16.50	13.50
	T*(8,L)V*C20	21.0	UC48C	1040	28.6	19.5	15.50	12.50
	T*(8,L)V*C20	21.0	UC60C	1055	28.6	19.7	15.50	12.75
	T*(8,L)X*A12	14.0	FC/MC/PC32A	970	29.6	20.3	15.00	12.50
	T*(8,L)X*A12	14.0	FC/MC/PC37A	1105	31.2	22.2	16.25	13.25
	T*(8,L)X*B12	17.0	FC/MC/PC35B	1120	30.2	21.5	15.50	13.00
	T*(8,L)X*B12	17.0	FC/MC/PC43B	1125	31.2	22.4	16.25	13.25
	T*(8,L)X*C16	21.0	FC/MC/PC35C	1105	30.4	21.5	15.75	13.00
	T*(8,L)X*C16	21.0	FC/MC/PC43C	955	31.0	21.2	16.75	13.50
	T*(8,L)X*C16	21.0	FC/MC/PC48C	970	31.2	21.4	17.00	13.75
	T*(8,L)X*C16	21.0	FC/PC60C	1115	31.2	22.1	17.00	13.50
	T*(8,L)X*C16	21.0	UC48C	970	28.8	19.6	16.00	13.00
	T*(8,L)X*C16	21.0	UC60C	1075	28.8	20.0	15.75	12.75
	T*(8,L)X*C20	21.0	FC/MC/PC35C	850	29.0	19.3	15.50	13.00
	T*(8,L)X*C20	21.0	FC/MC/PC43C	870	30.2	20.2	16.50	13.50
	T*(8,L)X*C20	21.0	FC/MC/PC48C	890	30.6	20.8	16.75	13.75
	T*(8,L)X*C20	21.0	FC/PC60C	895	30.6	20.7	17.00	13.75
	T*9(C,V)*B12	17.0	FC/MC/PC35B	1045	29.4	20.3	14.75	12.25
	T*9(C,V)*B12	17.0	FC/MC/PC43B	1035	30.4	20.8	15.50	12.50
	T*9(C,V)*C16	21.0	FC/MC/PC35C	1005	29.8	20.5	15.25	12.75
	T*9(C,V)*C16	21.0	FC/MC/PC43C	1030	30.6	21.0	16.00	13.00
	T*9(C,V)*C16	21.0	FC/MC/PC48C	990	31.0	21.4	16.50	13.25
	T*9(C,V)*C16	21.0	FC/PC60C	1020	31.0	21.3	16.50	13.00
	T*9(C,V)*C16	21.0	UC48C	990	28.6	19.5	15.50	12.50
	T*9(C,V)*C16	21.0	UC60C	1020	28.6	19.3	15.50	12.50

For Notes See Page 19.

COOLING CAPACITY - With High Efficiency Motor Furnaces (Continued)

UNIT MODEL	FURNACE		COIL MODEL[1]	COOLING				
	MODEL	WIDTH		RATED CFM	NET MBH		SEER	EER
					TOTAL	SENS.		
16 SEER AC WITH HIGH EFFICIENCY MOTOR FURNACES [2]								
CZF03013(C)	T*9(C,V)*C20	21.0	FC/MC/PC35C	985	29.8	20.5	15.25	12.75
	T*9(C,V)*C20	21.0	FC/MC/PC43C	995	30.8	21.0	16.25	13.25
	T*9(C,V)*C20	21.0	FC/MC/PC48C	965	31.0	21.4	16.50	13.50
	T*9(C,V)*C20	21.0	FC/PC60C	980	31.0	21.3	16.50	13.25
	T*9(C,V)*C20	21.0	UC48C	965	28.6	19.5	15.50	12.50
	T*9(C,V)*C20	21.0	UC60C	980	28.6	19.3	15.50	12.75
	T*9(C,V)*D20	24.0	FC/MC/PC48D	1085	31.4	22.2	16.50	13.50
	T*9(C,V)*D20	24.0	FC/MC/PC60D	1075	31.4	22.1	16.50	13.25
	T*9(C,V)*D20	24.0	UC48D	1085	29.4	20.6	15.50	12.50
	T*9(C,V)*D20	24.0	UC60D	1075	29.4	20.4	15.50	12.75
	T*9X*A10	14.5	FC/MC/PC37A	1025	30.0	20.9	14.50	12.00
	T*9X*B12	17.0	FC/MC/PC35B	1085	30.2	21.3	15.50	13.00
	T*9X*B12	17.0	FC/MC/PC43B	1095	31.2	22.0	16.50	13.25
	T*9X*C16	21.0	FC/MC/PC35C	1075	30.2	21.1	15.50	13.00
	T*9X*C16	21.0	FC/MC/PC43C	1055	31.0	21.8	16.50	13.25
	T*9X*C16	21.0	FC/MC/PC48C	1075	31.4	22.2	16.75	13.50
	T*9X*C16	21.0	FC/PC60C	1080	31.4	22.1	16.75	13.50
	T*9X*C16	21.0	UC48C	1075	29.2	20.4	15.50	12.50
	T*9X*C16	21.0	UC60C	1080	29.2	20.3	15.75	12.75
	T*9X*C20	21.0	FC/MC/PC35C	835	29.0	19.3	15.75	13.00
	T*9X*C20	21.0	FC/MC/PC43C	720	28.8	18.6	16.00	13.00
	T*9X*C20	21.0	FC/MC/PC48C	745	29.4	19.0	16.25	13.25
	T*9X*C20	21.0	FC/PC60C	905	29.4	20.1	16.25	13.50
	T*9X*D20	24.0	FC/MC/PC48D	780	29.6	19.5	16.50	13.25
	T*9X*D20	24.0	FC/MC/PC60D	945	29.6	20.3	16.50	13.50
	Y*(8,L)C*A12	14.0	FC/MC/PC32A	1035	29.4	20.1	14.25	11.75
	Y*(8,L)C*A12	14.0	FC/MC/PC37A	950	30.2	20.6	15.75	12.75
	Y*(8,L)C*B12	17.0	FC/MC/PC35B	1020	29.6	20.3	15.00	12.50
	Y*(8,L)C*B12	17.0	FC/MC/PC43B	1045	30.6	21.0	15.75	12.75
	Y*(8,L)C*C16	21.0	FC/MC/PC35C	985	29.8	20.5	15.25	12.75
	Y*(8,L)C*C16	21.0	FC/MC/PC43C	1035	30.8	21.0	16.25	13.25
	Y*(8,L)C*C16	21.0	FC/MC/PC48C	1010	31.0	21.4	16.50	13.25
	Y*(8,L)C*C16	21.0	FC/PC60C	1050	31.0	21.8	16.50	13.50
	Y*(8,L)C*C16	21.0	UC48C	1010	28.6	19.6	15.50	12.50
	Y*(8,L)C*C16	21.0	UC60C	995	28.6	19.3	15.75	12.75
	Y*(8,L)C*C20	21.0	FC/MC/PC35C	1035	29.6	20.5	15.00	12.50
	Y*(8,L)C*C20	21.0	FC/MC/PC43C	1025	30.8	21.2	16.75	13.50
	Y*(8,L)C*C20	21.0	FC/MC/PC48C	1030	31.0	21.4	16.50	13.50
	Y*(8,L)C*C20	21.0	FC/PC60C	970	31.0	21.3	16.50	13.50
	Y*(8,L)C*C20	21.0	UC48C	1040	28.6	19.5	15.50	12.50
	Y*(8,L)C*C20	21.0	UC60C	1055	28.6	19.7	15.50	12.75
	Y*9C*B12	17.0	FC/MC/PC35B	1045	29.4	20.3	14.75	12.25
	Y*9C*B12	17.0	FC/MC/PC43B	1035	30.4	20.8	15.50	12.50
	Y*9C*C16	21.0	FC/MC/PC35C	1005	29.8	20.5	15.25	12.75
	Y*9C*C16	21.0	FC/MC/PC43C	1030	30.6	21.0	16.00	13.00
	Y*9C*C16	21.0	FC/MC/PC48C	990	31.0	21.4	16.50	13.25
	Y*9C*C16	21.0	FC/PC60C	1020	31.0	21.3	16.50	13.00
	Y*9C*C16	21.0	UC48C	990	28.6	19.5	15.50	12.50
	Y*9C*C16	21.0	UC60C	1020	28.6	19.3	15.50	12.50
	Y*9C*C20	21.0	FC/MC/PC35C	985	29.8	20.5	15.25	12.75
	Y*9C*C20	21.0	FC/MC/PC43C	995	30.8	21.0	16.25	13.25
	Y*9C*C20	21.0	FC/MC/PC48C	965	31.0	21.4	16.50	13.50
	Y*9C*C20	21.0	FC/PC60C	980	31.0	21.3	16.50	13.25
	Y*9C*C20	21.0	UC48C	965	28.6	19.5	15.50	12.50

For Notes See Page 19.

COOLING CAPACITY - With High Efficiency Motor Furnaces (Continued)

UNIT MODEL	FURNACE		COIL MODEL[1]	COOLING				
	MODEL	WIDTH		RATED CFM	NET MBH		SEER	EER
					TOTAL	SENS.		
16 SEER AC WITH HIGH EFFICIENCY MOTOR FURNACES [2]								
CZF03013(C)	Y*9C*C20	21.0	UC60C	980	28.6	19.3	15.50	12.75
	Y*9C*D20	24.0	FC/MC/PC48D	1085	31.4	22.2	16.50	13.50
	Y*9C*D20	24.0	FC/MC/PC60D	1075	31.4	22.1	16.50	13.25
	Y*9C*D20	24.0	UC48D	1085	29.4	20.6	15.50	12.50
	Y*9C*D20	24.0	UC60D	1075	29.4	20.4	15.50	12.75
CZF03613(C)	T*(8,L)C*A12	14.0	FC/MC/PC37A	1150	35.6	26.4	15.00	12.25
	T*(8,L)C*B12	17.0	FC/MC/PC43B	1275	35.6	27.2	14.75	12.25
	T*(8,L)C*B12	17.0	HD48	1210	35.8	26.6	15.25	12.75
	T*(8,L)C*C16	21.0	FC/MC/PC43C	1190	36.0	26.4	15.75	13.00
	T*(8,L)C*C16	21.0	FC/MC/PC48C	1195	36.0	26.8	16.00	13.25
	T*(8,L)C*C16	21.0	FC/PC60C	1185	36.0	26.6	16.25	13.25
	T*(8,L)C*C16	21.0	HD48	1210	36.0	26.6	15.75	13.25
	T*(8,L)C*C16	21.0	HD60	1210	36.2	26.8	16.00	13.25
	T*(8,L)C*C16	21.0	UC48C	1210	35.4	26.2	15.75	13.00
	T*(8,L)C*C16	21.0	UC60C	1195	35.4	26.0	15.75	13.00
	T*(8,L)C*C20	21.0	FC/MC/PC43C	1190	36.0	26.4	15.75	13.00
	T*(8,L)C*C20	21.0	FC/MC/PC48C	1150	36.2	26.8	16.00	13.25
	T*(8,L)C*C20	21.0	FC/PC60C	1215	36.0	26.6	16.00	13.25
	T*(8,L)C*C20	21.0	HD48	1155	36.0	26.6	16.00	13.25
	T*(8,L)C*C20	21.0	HD60	1155	36.4	27.0	16.25	13.50
	T*(8,L)C*C20	21.0	UC48C	1155	35.6	26.4	16.00	13.25
	T*(8,L)C*C20	21.0	UC60C	1215	35.4	26.0	15.75	13.00
	T*(8,L)V*A12	14.0	FC/MC/PC37A	1150	35.6	26.4	15.00	12.25
	T*(8,L)V*B12	17.0	FC/MC/PC43B	1275	35.6	27.2	14.75	12.25
	T*(8,L)V*B12	17.0	HD48	1210	35.8	26.6	15.25	12.75
	T*(8,L)V*C16	21.0	FC/MC/PC43C	1190	36.0	26.4	15.75	13.00
	T*(8,L)V*C16	21.0	FC/MC/PC48C	1195	36.0	26.8	16.00	13.25
	T*(8,L)V*C16	21.0	FC/PC60C	1185	36.0	26.6	16.25	13.25
	T*(8,L)V*C16	21.0	HD48	1210	36.0	26.6	15.75	13.25
	T*(8,L)V*C16	21.0	HD60	1210	36.2	26.8	16.00	13.25
	T*(8,L)V*C16	21.0	UC48C	1210	35.4	26.2	15.75	13.00
	T*(8,L)V*C16	21.0	UC60C	1195	35.4	26.0	15.75	13.00
	T*(8,L)V*C20	21.0	FC/MC/PC43C	1190	36.0	26.4	15.75	13.00
	T*(8,L)V*C20	21.0	FC/MC/PC48C	1150	36.2	26.8	16.00	13.25
	T*(8,L)V*C20	21.0	FC/PC60C	1215	36.0	26.6	16.00	13.25
	T*(8,L)V*C20	21.0	HD48	1155	36.0	26.6	16.00	13.25
	T*(8,L)V*C20	21.0	HD60	1155	36.4	27.0	16.25	13.50
	T*(8,L)V*C20	21.0	UC48C	1155	35.6	26.4	16.00	13.25
	T*(8,L)V*C20	21.0	UC60C	1215	35.4	26.0	15.75	13.00
	T*(8,L)X*A12	14.0	FC/MC/PC37A	1290	36.0	27.6	15.75	12.75
	T*(8,L)X*B12	17.0	FC/MC/PC43B	1300	36.4	27.6	15.75	13.00
	T*(8,L)X*B12	17.0	HD48	1150	36.2	26.8	16.25	13.50
	T*(8,L)X*C16	21.0	FC/MC/PC43C	1175	36.2	26.8	16.50	13.50
	T*(8,L)X*C16	21.0	FC/MC/PC48C	1185	36.4	26.8	16.50	13.50
	T*(8,L)X*C16	21.0	FC/PC60C	1190	36.2	26.8	16.50	13.75
	T*(8,L)X*C16	21.0	HD48	1120	35.6	26.0	16.25	13.50
	T*(8,L)X*C16	21.0	HD60	1120	36.0	26.4	16.25	13.50
	T*(8,L)X*C16	21.0	UC48C	1185	35.8	26.4	16.25	13.50
	T*(8,L)X*C16	21.0	UC60C	1190	35.6	26.2	16.25	13.50
	T*(8,L)X*C20	21.0	FC/MC/PC43C	1250	36.0	26.6	16.00	13.25
	T*(8,L)X*C20	21.0	FC/MC/PC48C	1270	36.6	27.8	16.50	13.50
	T*(8,L)X*C20	21.0	FC/PC60C	1275	36.4	27.6	16.25	13.50
	T*(8,L)X*C20	21.0	HD48	1245	36.0	26.6	16.00	13.25
	T*(8,L)X*C20	21.0	HD60	1245	36.4	27.0	16.25	13.50

For Notes See Page 19.

COOLING CAPACITY - With High Efficiency Motor Furnaces (Continued)

UNIT MODEL	FURNACE		COIL MODEL[1]	COOLING				
	MODEL	WIDTH		RATED CFM	NET MBH		SEER	EER
					TOTAL	SENS.		
16 SEER AC WITH HIGH EFFICIENCY MOTOR FURNACES [2]								
CZF03613(C)	T*(8,L)X*C20	21.0	UC48C	1270	35.8	27.2	16.25	13.25
	T*(8,L)X*C20	21.0	UC60C	1275	35.8	27.0	16.25	13.25
	T*9(C,V)*B12	17.0	FC/MC/PC43B	1200	35.6	26.4	15.00	12.25
	T*9(C,V)*B12	17.0	HD48	1150	35.8	26.4	15.00	12.50
	T*9(C,V)*C16	21.0	FC/MC/PC43C	1240	35.6	26.2	15.25	12.50
	T*9(C,V)*C16	21.0	FC/MC/PC48C	1195	36.0	26.6	15.75	13.00
	T*9(C,V)*C16	21.0	FC/PC60C	1235	35.6	26.4	15.25	12.75
	T*9(C,V)*C16	21.0	HD48	1195	35.8	26.4	15.50	13.00
	T*9(C,V)*C16	21.0	HD60	1195	36.2	26.8	15.75	13.00
	T*9(C,V)*C16	21.0	UC48C	1195	35.4	26.2	15.50	12.75
	T*9(C,V)*C16	21.0	UC60C	1235	35.0	25.8	15.00	12.50
	T*9(C,V)*C20	21.0	FC/MC/PC43C	1200	35.8	26.4	15.50	13.00
	T*9(C,V)*C20	21.0	FC/MC/PC48C	1330	36.4	28.0	15.50	12.75
	T*9(C,V)*C20	21.0	FC/PC60C	1330	36.4	27.8	15.50	12.75
	T*9(C,V)*C20	21.0	HD48	1330	36.4	27.6	15.25	12.75
	T*9(C,V)*C20	21.0	HD60	1330	36.6	28.0	15.50	12.75
	T*9(C,V)*C20	21.0	UC48C	1330	35.6	27.4	15.25	12.50
	T*9(C,V)*C20	21.0	UC60C	1330	35.6	27.0	15.25	12.75
	T*9(C,V)*D20	24.0	FC/MC/PC48D	1240	36.2	26.6	15.50	13.00
	T*9(C,V)*D20	24.0	FC/MC/PC60D	1225	35.6	26.2	15.75	13.00
	T*9(C,V)*D20	24.0	FC/MC62D	1235	36.2	26.6	16.00	13.25
	T*9(C,V)*D20	24.0	HD48	1225	36.0	26.4	15.50	13.00
	T*9(C,V)*D20	24.0	HD60	1225	36.0	26.4	15.75	13.25
	T*9(C,V)*D20	24.0	UC48D	1240	35.6	26.2	15.25	12.75
	T*9(C,V)*D20	24.0	UC60D	1225	35.0	25.6	15.50	12.75
	T*9X*B12	17.0	FC/MC/PC43B	1270	36.0	27.6	15.50	12.75
	T*9X*B12	17.0	HD48	1290	36.4	27.6	15.75	13.00
	T*9X*C16	21.0	FC/MC/PC43C	1260	36.2	27.2	15.75	13.00
	T*9X*C16	21.0	FC/MC/PC48C	1280	36.4	27.8	16.00	13.25
	T*9X*C16	21.0	FC/PC60C	1315	36.4	27.8	16.00	13.25
	T*9X*C16	21.0	HD48	1320	36.6	28.0	16.00	13.25
	T*9X*C16	21.0	HD60	1320	36.8	28.2	16.25	13.50
	T*9X*C16	21.0	UC48C	1280	35.6	27.4	15.75	13.00
	T*9X*C16	21.0	UC60C	1315	35.8	27.2	15.75	13.00
	T*9X*C20	21.0	FC/MC/PC43C	1185	36.0	26.6	16.00	13.25
	T*9X*C20	21.0	FC/MC/PC48C	1205	36.0	26.8	16.00	13.25
	T*9X*C20	21.0	FC/PC60C	1240	36.0	26.6	16.00	13.25
	T*9X*C20	21.0	HD48	1245	36.0	26.6	16.00	13.25
	T*9X*C20	21.0	HD60	1245	36.4	27.0	16.25	13.50
	T*9X*C20	21.0	UC48C	1205	35.6	26.4	15.75	13.00
	T*9X*C20	21.0	UC60C	1240	35.4	26.0	15.75	13.00
	T*9X*D20	24.0	FC/MC/PC48D	1240	36.4	26.8	16.00	13.50
	T*9X*D20	24.0	FC/MC/PC60D	1310	36.4	27.6	16.50	13.50
	T*9X*D20	24.0	FC/MC62D	1225	36.2	26.6	16.25	13.50
	T*9X*D20	24.0	FC64D	1225	36.8	27.4	16.50	13.75
	T*9X*D20	24.0	HD48	1260	36.6	27.4	16.00	13.50
	T*9X*D20	24.0	HD60	1260	36.6	27.4	16.25	13.50
	T*9X*D20	24.0	UC48D	1240	35.8	26.4	15.75	13.25
	T*9X*D20	24.0	UC60D	1310	35.8	26.8	16.25	13.50
	Y*(8,L)C*A12	14.0	FC/MC/PC37A	1150	35.6	26.4	15.00	12.25
	Y*(8,L)C*B12	17.0	FC/MC/PC43B	1275	35.6	27.2	14.75	12.25
	Y*(8,L)C*B12	17.0	HD48	1210	35.8	26.6	15.25	12.75
	Y*(8,L)C*C16	21.0	FC/MC/PC43C	1190	36.0	26.4	15.75	13.00
	Y*(8,L)C*C16	21.0	FC/MC/PC48C	1195	36.0	26.8	16.00	13.25

For Notes See Page 19.

COOLING CAPACITY - With High Efficiency Motor Furnaces (Continued)

UNIT MODEL	FURNACE		COIL MODEL[1]	COOLING				
	MODEL	WIDTH		RATED CFM	NET MBH		SEER	EER
					TOTAL	SENS.		
16 SEER AC WITH HIGH EFFICIENCY MOTOR FURNACES [2]								
CZF03613(C)	Y*(8,L)C*C16	21.0	FC/PC60C	1185	36.0	26.6	16.25	13.25
	Y*(8,L)C*C16	21.0	HD48	1210	36.0	26.6	15.75	13.25
	Y*(8,L)C*C16	21.0	HD60	1210	36.2	26.8	16.00	13.25
	Y*(8,L)C*C16	21.0	UC48C	1210	35.4	26.2	15.75	13.00
	Y*(8,L)C*C16	21.0	UC60C	1195	35.4	26.0	15.75	13.00
	Y*(8,L)C*C20	21.0	FC/MC/PC43C	1190	36.0	26.4	15.75	13.00
	Y*(8,L)C*C20	21.0	FC/MC/PC48C	1150	36.2	26.8	16.00	13.25
	Y*(8,L)C*C20	21.0	FC/PC60C	1215	36.0	26.6	16.00	13.25
	Y*(8,L)C*C20	21.0	HD48	1155	36.0	26.6	16.00	13.25
	Y*(8,L)C*C20	21.0	HD60	1155	36.4	27.0	16.25	13.50
	Y*(8,L)C*C20	21.0	UC48C	1155	35.6	26.4	16.00	13.25
	Y*(8,L)C*C20	21.0	UC60C	1215	35.4	26.0	15.75	13.00
	Y*9C*B12	17.0	FC/MC/PC43B	1200	35.6	26.4	15.00	12.25
	Y*9C*B12	17.0	HD48	1150	35.8	26.4	15.00	12.50
	Y*9C*C16	21.0	FC/MC/PC43C	1240	35.6	26.2	15.25	12.50
	Y*9C*C16	21.0	FC/MC/PC48C	1195	36.0	26.6	15.75	13.00
	Y*9C*C16	21.0	FC/PC60C	1235	35.6	26.4	15.25	12.75
	Y*9C*C16	21.0	HD48	1195	35.8	26.4	15.50	13.00
	Y*9C*C16	21.0	HD60	1195	36.2	26.8	15.75	13.00
	Y*9C*C16	21.0	UC48C	1195	35.4	26.2	15.50	12.75
	Y*9C*C16	21.0	UC60C	1235	35.0	25.8	15.00	12.50
	Y*9C*C20	21.0	FC/MC/PC43C	1200	35.8	26.4	15.50	13.00
	Y*9C*C20	21.0	FC/MC/PC48C	1330	36.4	28.0	15.50	12.75
	Y*9C*C20	21.0	FC/PC60C	1330	36.4	27.8	15.50	12.75
	Y*9C*C20	21.0	HD48	1330	36.4	27.6	15.25	12.75
	Y*9C*C20	21.0	HD60	1330	36.6	28.0	15.50	12.75
	Y*9C*C20	21.0	UC48C	1330	35.6	27.4	15.25	12.50
	Y*9C*C20	21.0	UC60C	1330	35.6	27.0	15.25	12.75
	Y*9C*D20	24.0	FC/MC/PC48D	1240	36.2	26.6	15.50	13.00
	Y*9C*D20	24.0	FC/MC/PC60D	1225	35.6	26.2	15.75	13.00
	Y*9C*D20	24.0	FC/MC62D	1235	36.2	26.6	16.00	13.25
	Y*9C*D20	24.0	HD48	1225	36.0	26.4	15.50	13.00
	Y*9C*D20	24.0	HD60	1225	36.0	26.4	15.75	13.25
	Y*9C*D20	24.0	UC48D	1240	35.6	26.2	15.25	12.75
	Y*9C*D20	24.0	UC60D	1225	35.0	25.6	15.50	12.75
CZF04213(C)	T*(8,L)C*C16	21.0	FC/MC/PC60D	1420	42.0	30.6	15.00	12.75
	T*(8,L)C*C16	21.0	FC/MC62D	1420	42.0	31.0	15.25	12.75
	T*(8,L)C*C16	21.0	FC/PC60C	1420	42.0	30.6	15.25	12.75
	T*(8,L)C*C16	21.0	FC64D	1420	43.0	32.2	16.00	13.25
	T*(8,L)C*C16	21.0	HD48	1435	40.0	29.4	14.75	12.50
	T*(8,L)C*C16	21.0	HD60	1420	42.5	31.2	15.50	13.00
	T*(8,L)C*C16	21.0	UC60C	1420	41.0	30.0	15.00	12.50
	T*(8,L)C*C20	21.0	FC/MC/PC48C	1410	40.0	29.6	15.00	12.75
	T*(8,L)C*C20	21.0	FC/MC/PC48D	1410	40.0	29.6	15.00	12.75
	T*(8,L)C*C20	21.0	FC/MC/PC60D	1340	42.0	30.8	15.50	13.00
	T*(8,L)C*C20	21.0	FC/MC62D	1365	42.5	31.2	15.75	13.00
	T*(8,L)C*C20	21.0	FC/PC60C	1340	42.0	30.8	15.50	13.00
	T*(8,L)C*C20	21.0	FC64D	1410	43.0	32.2	16.25	13.50
	T*(8,L)C*C20	21.0	HD48	1410	40.0	29.4	15.00	12.75
	T*(8,L)C*C20	21.0	HD60	1410	42.5	31.4	15.75	13.25
	T*(8,L)C*C20	21.0	UC60C	1410	41.0	30.2	15.25	12.75
	T*(8,L)V*C16	21.0	FC/MC/PC60D	1420	42.0	30.6	15.00	12.75
	T*(8,L)V*C16	21.0	FC/MC62D	1420	42.0	31.0	15.25	12.75
	T*(8,L)V*C16	21.0	FC/PC60C	1420	42.0	30.6	15.25	12.75

For Notes See Page 19.

COOLING CAPACITY - With High Efficiency Motor Furnaces (Continued)

UNIT MODEL	FURNACE		COIL MODEL[1]	COOLING				
	MODEL	WIDTH		RATED CFM	NET MBH		SEER	EER
					TOTAL	SENS.		
16 SEER AC WITH HIGH EFFICIENCY MOTOR FURNACES [2]								
CZF04213(C)	T*(8,L)V*C16	21.0	FC64D	1420	43.0	32.2	16.00	13.25
	T*(8,L)V*C16	21.0	HD48	1435	40.0	29.4	14.75	12.50
	T*(8,L)V*C16	21.0	HD60	1420	42.5	31.2	15.50	13.00
	T*(8,L)V*C16	21.0	UC60C	1420	41.0	30.0	15.00	12.50
	T*(8,L)V*C20	21.0	FC/MC/PC48C	1410	40.0	29.6	15.00	12.75
	T*(8,L)V*C20	21.0	FC/MC/PC48D	1410	40.0	29.6	15.00	12.75
	T*(8,L)V*C20	21.0	FC/MC/PC60D	1340	42.0	30.8	15.50	13.00
	T*(8,L)V*C20	21.0	FC/MC62D	1365	42.5	31.2	15.75	13.00
	T*(8,L)V*C20	21.0	FC/PC60C	1340	42.0	30.8	15.50	13.00
	T*(8,L)V*C20	21.0	FC64D	1410	43.0	32.2	16.25	13.50
	T*(8,L)V*C20	21.0	HD48	1410	40.0	29.4	15.00	12.75
	T*(8,L)V*C20	21.0	HD60	1410	42.5	31.4	15.75	13.25
	T*(8,L)V*C20	21.0	UC60C	1410	41.0	30.2	15.25	12.75
	T*(8,L)X*C16	21.0	FC/MC/PC48C	1360	40.5	29.8	15.75	13.25
	T*(8,L)X*C16	21.0	FC/MC/PC48D	1360	40.5	29.8	15.75	13.25
	T*(8,L)X*C16	21.0	FC/MC/PC60D	1360	42.0	31.0	16.00	13.50
	T*(8,L)X*C16	21.0	FC/MC62D	1360	42.5	31.4	16.25	13.50
	T*(8,L)X*C16	21.0	FC/PC60C	1360	42.0	31.0	16.00	13.25
	T*(8,L)X*C16	21.0	FC64D	1360	43.5	32.4	16.50	13.75
	T*(8,L)X*C16	21.0	HD48	1340	40.5	29.8	15.75	13.00
	T*(8,L)X*C16	21.0	HD60	1340	43.0	31.6	16.00	13.00
	T*(8,L)X*C16	21.0	UC60C	1400	41.5	30.4	15.75	13.00
	T*(8,L)X*C20	21.0	FC/MC/PC48C	1475	40.5	30.8	15.75	13.25
	T*(8,L)X*C20	21.0	FC/MC/PC48D	1475	40.5	30.8	15.75	13.25
	T*(8,L)X*C20	21.0	FC/MC/PC60D	1485	42.0	31.8	15.75	13.25
	T*(8,L)X*C20	21.0	FC/MC62D	1485	43.0	32.6	16.25	13.50
	T*(8,L)X*C20	21.0	FC/PC60C	1485	42.5	32.0	16.00	13.25
	T*(8,L)X*C20	21.0	FC64D	1485	43.5	33.6	16.50	13.75
	T*(8,L)X*C20	21.0	HD48	1490	40.5	30.4	15.75	13.00
	T*(8,L)X*C20	21.0	HD60	1490	43.0	32.6	16.00	13.00
	T*(8,L)X*C20	21.0	UC60C	1485	41.5	30.8	15.50	13.00
	T*9(C,V)*C16	21.0	FC/MC/PC48C	1395	40.0	29.4	14.75	12.50
	T*9(C,V)*C16	21.0	FC/MC/PC48D	1395	40.0	29.4	14.75	12.50
	T*9(C,V)*C16	21.0	FC/MC/PC60D	1445	41.5	30.4	14.50	12.25
	T*9(C,V)*C16	21.0	FC/MC62D	1445	42.0	30.8	14.75	12.25
	T*9(C,V)*C16	21.0	FC/PC60C	1445	41.5	30.4	14.50	12.25
	T*9(C,V)*C16	21.0	FC64D	1445	42.5	31.8	15.25	12.75
	T*9(C,V)*C16	21.0	HD48	1395	40.0	29.4	14.75	12.50
	T*9(C,V)*C16	21.0	HD60	1445	42.0	31.0	14.75	12.50
	T*9(C,V)*C16	21.0	UC60C	1445	40.5	29.8	14.25	12.00
	T*9(C,V)*C20	21.0	FC/MC/PC48C	1430	40.0	29.4	14.50	12.50
	T*9(C,V)*C20	21.0	FC/MC/PC48D	1430	40.0	29.4	14.75	12.50
	T*9(C,V)*C20	21.0	FC/MC/PC60D	1445	41.5	30.6	14.75	12.50
	T*9(C,V)*C20	21.0	FC/MC62D	1445	42.0	31.0	15.00	12.75
	T*9(C,V)*C20	21.0	FC/PC60C	1445	41.5	30.6	15.00	12.50
	T*9(C,V)*C20	21.0	FC64D	1445	43.0	32.0	15.50	13.00
	T*9(C,V)*C20	21.0	HD60	1445	42.5	31.2	15.00	12.75
	T*9(C,V)*C20	21.0	UC60C	1445	41.0	30.0	14.50	12.25
	T*9(C,V)*D20	24.0	FC/MC/PC48D	1450	40.0	29.4	15.00	12.50
	T*9(C,V)*D20	24.0	FC/MC/PC60D	1445	42.0	30.6	15.00	12.75
	T*9(C,V)*D20	24.0	FC/MC62D	1455	42.0	31.0	15.25	12.75
	T*9(C,V)*D20	24.0	FC64D	1455	43.0	32.2	15.75	13.00
	T*9(C,V)*D20	24.0	HD48	1450	40.0	29.4	14.75	12.50
	T*9(C,V)*D20	24.0	HD60	1445	42.5	31.2	15.25	13.00

For Notes See Page 19.

COOLING CAPACITY - With High Efficiency Motor Furnaces (Continued)

UNIT MODEL	FURNACE		COIL MODEL[1]	COOLING				
	MODEL	WIDTH		RATED CFM	NET MBH		SEER	EER
					TOTAL	SENS.		
16 SEER AC WITH HIGH EFFICIENCY MOTOR FURNACES [2]								
CZF04213(C)	T*9(C,V)*D20	24.0	UC60D	1445	41.0	30.0	14.75	12.50
	T*9X*C16	21.0	FC/MC/PC48C	1425	40.0	29.6	15.25	13.00
	T*9X*C16	21.0	FC/MC/PC48D	1425	40.0	29.6	15.25	13.00
	T*9X*C16	21.0	FC/MC/PC60D	1460	42.0	30.6	15.50	13.00
	T*9X*C16	21.0	FC/MC62D	1460	42.0	31.2	15.75	13.00
	T*9X*C16	21.0	FC/PC60C	1460	42.0	30.6	15.50	13.00
	T*9X*C16	21.0	FC64D	1460	43.0	32.2	16.25	13.50
	T*9X*C16	21.0	HD48	1465	40.0	29.6	15.25	12.75
	T*9X*C16	21.0	HD60	1465	42.5	31.4	15.50	13.25
	T*9X*C16	21.0	UC60C	1460	41.0	30.0	15.00	12.50
	T*9X*C20	21.0	FC/MC/PC48C	1420	40.5	29.8	15.50	13.00
	T*9X*C20	21.0	FC/MC/PC48D	1420	40.5	29.8	15.00	13.00
	T*9X*C20	21.0	FC/MC/PC60D	1460	42.0	30.8	15.75	13.25
	T*9X*C20	21.0	FC/MC62D	1460	42.5	31.2	16.00	13.25
	T*9X*C20	21.0	FC/PC60C	1460	42.0	30.8	15.75	13.00
	T*9X*C20	21.0	FC64D	1460	43.0	32.4	16.50	13.50
	T*9X*C20	21.0	HD48	1465	40.0	29.6	15.50	13.00
	T*9X*C20	21.0	HD60	1465	42.5	31.4	15.75	13.25
	T*9X*C20	21.0	UC60C	1460	41.0	30.2	15.25	12.75
	T*9X*D20	24.0	FC/MC/PC48D	1435	40.5	29.8	15.75	13.00
	T*9X*D20	24.0	FC/MC/PC60D	1515	42.5	32.4	16.00	13.50
	T*9X*D20	24.0	FC/MC62D	1425	42.5	31.4	16.00	13.25
	T*9X*D20	24.0	FC64D	1425	43.0	32.4	16.50	13.50
	T*9X*D20	24.0	HD48	1460	40.0	29.6	15.50	13.00
	T*9X*D20	24.0	HD60	1460	43.0	31.4	16.00	13.50
	T*9X*D20	24.0	UC60D	1515	42.0	31.2	15.75	13.00
	Y*(8,L)C*C16	21.0	FC/MC/PC60D	1420	42.0	30.6	15.00	12.75
	Y*(8,L)C*C16	21.0	FC/MC62D	1420	42.0	31.0	15.25	12.75
	Y*(8,L)C*C16	21.0	FC/PC60C	1420	42.0	30.6	15.25	12.75
	Y*(8,L)C*C16	21.0	FC64D	1420	43.0	32.2	16.00	13.25
	Y*(8,L)C*C16	21.0	HD48	1435	40.0	29.4	14.75	12.50
	Y*(8,L)C*C16	21.0	HD60	1420	42.5	31.2	15.50	13.00
	Y*(8,L)C*C16	21.0	UC60C	1420	41.0	30.0	15.00	12.50
	Y*(8,L)C*C20	21.0	FC/MC/PC48C	1410	40.0	29.6	15.00	12.75
	Y*(8,L)C*C20	21.0	FC/MC/PC48D	1410	40.0	29.6	15.00	12.75
	Y*(8,L)C*C20	21.0	FC/MC/PC60D	1340	42.0	30.8	15.50	13.00
	Y*(8,L)C*C20	21.0	FC/MC62D	1365	42.5	31.2	15.75	13.00
	Y*(8,L)C*C20	21.0	FC/PC60C	1340	42.0	30.8	15.50	13.00
	Y*(8,L)C*C20	21.0	FC64D	1410	43.0	32.2	16.25	13.50
	Y*(8,L)C*C20	21.0	HD48	1410	40.0	29.4	15.00	12.75
	Y*(8,L)C*C20	21.0	HD60	1410	42.5	31.4	15.75	13.25
	Y*(8,L)C*C20	21.0	UC60C	1410	41.0	30.2	15.25	12.75
	Y*9C*C16	21.0	FC/MC/PC48C	1395	40.0	29.4	14.75	12.50
	Y*9C*C16	21.0	FC/MC/PC48D	1395	40.0	29.4	14.75	12.50
	Y*9C*C16	21.0	FC/MC/PC60D	1445	41.5	30.4	14.50	12.25
	Y*9C*C16	21.0	FC/MC62D	1445	42.0	30.8	14.75	12.25
	Y*9C*C16	21.0	FC/PC60C	1445	41.5	30.4	14.50	12.25
	Y*9C*C16	21.0	FC64D	1445	42.5	31.8	15.25	12.75
	Y*9C*C16	21.0	HD48	1395	40.0	29.4	14.75	12.50
	Y*9C*C16	21.0	HD60	1445	42.0	31.0	14.75	12.50
	Y*9C*C16	21.0	UC60C	1445	40.5	29.8	14.25	12.00
	Y*9C*C20	21.0	FC/MC/PC48C	1430	40.0	29.4	14.50	12.50
	Y*9C*C20	21.0	FC/MC/PC48D	1430	40.0	29.4	14.75	12.50
	Y*9C*C20	21.0	FC/MC/PC60D	1445	41.5	30.6	14.75	12.50

For Notes See Page 19.

COOLING CAPACITY - With High Efficiency Motor Furnaces (Continued)

UNIT MODEL	FURNACE		COIL MODEL[1]	COOLING				
	MODEL	WIDTH		RATED CFM	NET MBH		SEER	EER
					TOTAL	SENS.		
16 SEER AC WITH HIGH EFFICIENCY MOTOR FURNACES [2]								
CZF04213(C)	Y*9C*C20	21.0	FC/MC62D	1445	42.0	31.0	15.00	12.75
	Y*9C*C20	21.0	FC/PC60C	1445	41.5	30.6	15.00	12.50
	Y*9C*C20	21.0	FC64D	1445	43.0	32.0	15.50	13.00
	Y*9C*C20	21.0	HD60	1445	42.5	31.2	15.00	12.75
	Y*9C*C20	21.0	UC60C	1445	41.0	30.0	14.50	12.25
	Y*9C*D20	24.0	FC/MC/PC48D	1450	40.0	29.4	15.00	12.50
	Y*9C*D20	24.0	FC/MC/PC60D	1445	42.0	30.6	15.00	12.75
	Y*9C*D20	24.0	FC/MC62D	1455	42.0	31.0	15.25	12.75
	Y*9C*D20	24.0	FC64D	1455	43.0	32.2	15.75	13.00
	Y*9C*D20	24.0	HD48	1450	40.0	29.4	14.75	12.50
	Y*9C*D20	24.0	HD60	1445	42.5	31.2	15.25	13.00
	Y*9C*D20	24.0	UC60D	1445	41.0	30.0	14.75	12.50
CZF04814(C)	T*(8,L)C*C16	21.0	FC/MC/PC48C	1565	46.5	33.0	14.00	12.25
	T*(8,L)C*C16	21.0	FC/MC/PC48D	1565	46.5	33.0	14.00	12.25
	T*(8,L)C*C16	21.0	FC/MC/PC60D	1420	45.5	31.4	14.75	12.75
	T*(8,L)C*C16	21.0	FC/MC62D	1635	47.0	33.8	14.50	12.75
	T*(8,L)C*C16	21.0	FC/PC60C	1600	46.0	32.6	14.00	12.25
	T*(8,L)C*C16	21.0	FC64D	1635	48.5	35.4	15.00	13.00
	T*(8,L)C*C16	21.0	HD60	1625	47.0	33.4	14.50	12.75
	T*(8,L)C*C16	21.0	UC48C	1615	47.0	33.2	14.25	12.50
	T*(8,L)C*C16	21.0	UC60C	1625	46.0	32.6	14.25	12.50
	T*(8,L)C*C20	21.0	FC/MC/PC48C	1640	46.5	33.2	14.25	12.50
	T*(8,L)C*C20	21.0	FC/MC/PC48D	1640	46.5	33.2	14.25	12.50
	T*(8,L)C*C20	21.0	FC/MC/PC60D	1340	45.5	30.8	15.00	13.00
	T*(8,L)C*C20	21.0	FC/MC62D	1620	47.0	33.8	14.75	12.75
	T*(8,L)C*C20	21.0	FC/PC60C	1340	45.5	30.8	15.00	13.00
	T*(8,L)C*C20	21.0	FC64D	1410	48.0	33.4	15.75	13.50
	T*(8,L)C*C20	21.0	HD60	1605	47.0	33.6	14.75	13.00
	T*(8,L)C*C20	21.0	UC48C	1640	47.0	33.2	14.25	12.50
	T*(8,L)C*C20	21.0	UC60C	1605	46.0	32.8	14.50	12.75
	T*(8,L)V*C16	21.0	FC/MC/PC48C	1565	46.5	33.0	14.00	12.25
	T*(8,L)V*C16	21.0	FC/MC/PC48D	1565	46.5	33.0	14.00	12.25
	T*(8,L)V*C16	21.0	FC/MC/PC60D	1420	45.5	31.4	14.75	12.75
	T*(8,L)V*C16	21.0	FC/MC62D	1635	47.0	33.8	14.50	12.75
	T*(8,L)V*C16	21.0	FC/PC60C	1600	46.0	32.6	14.00	12.25
	T*(8,L)V*C16	21.0	FC64D	1635	48.5	35.4	15.00	13.00
	T*(8,L)V*C16	21.0	HD60	1625	47.0	33.4	14.50	12.75
	T*(8,L)V*C16	21.0	UC48C	1615	47.0	33.2	14.25	12.50
	T*(8,L)V*C16	21.0	UC60C	1625	46.0	32.6	14.25	12.50
	T*(8,L)V*C20	21.0	FC/MC/PC48C	1640	46.5	33.2	14.25	12.50
	T*(8,L)V*C20	21.0	FC/MC/PC48D	1640	46.5	33.2	14.25	12.50
	T*(8,L)V*C20	21.0	FC/MC/PC60D	1340	45.5	30.8	15.00	13.00
	T*(8,L)V*C20	21.0	FC/MC62D	1620	47.0	33.8	14.75	12.75
	T*(8,L)V*C20	21.0	FC/PC60C	1340	45.5	30.8	15.00	13.00
	T*(8,L)V*C20	21.0	FC64D	1410	48.0	33.4	15.75	13.50
	T*(8,L)V*C20	21.0	HD60	1605	47.0	33.6	14.75	13.00
	T*(8,L)V*C20	21.0	UC48C	1640	47.0	33.2	14.25	12.50
	T*(8,L)V*C20	21.0	UC60C	1605	46.0	32.8	14.50	12.75
	T*(8,L)X*C16	21.0	FC/MC/PC48C	1600	47.0	33.4	14.75	13.00
	T*(8,L)X*C16	21.0	FC/MC/PC48D	1600	47.0	33.4	14.75	13.00
	T*(8,L)X*C16	21.0	FC/MC/PC60D	1605	46.5	32.8	14.75	12.75
	T*(8,L)X*C16	21.0	FC/MC62D	1610	47.0	33.8	14.75	13.00
	T*(8,L)X*C16	21.0	FC/PC60C	1605	46.5	32.8	14.75	12.75
	T*(8,L)X*C16	21.0	FC64D	1610	48.5	35.6	15.50	13.25

For Notes See Page 19.

COOLING CAPACITY - With High Efficiency Motor Furnaces (Continued)

UNIT MODEL	FURNACE		COIL MODEL[1]	COOLING				
	MODEL	WIDTH		RATED CFM	NET MBH		SEER	EER
					TOTAL	SENS.		
16 SEER AC WITH HIGH EFFICIENCY MOTOR FURNACES [2]								
CZF04814(C)	T*(8,L)X*C16	21.0	HD60	1610	47.0	33.6	14.75	13.00
	T*(8,L)X*C16	21.0	UC48C	1600	47.0	33.4	14.75	13.00
	T*(8,L)X*C16	21.0	UC60C	1605	46.0	32.8	14.50	12.75
	T*(8,L)X*C20	21.0	FC/MC/PC48C	1660	47.0	33.4	15.00	13.00
	T*(8,L)X*C20	21.0	FC/MC/PC48D	1660	47.0	33.4	15.00	13.00
	T*(8,L)X*C20	21.0	FC/MC/PC60D	1595	46.5	32.8	14.75	12.75
	T*(8,L)X*C20	21.0	FC/MC62D	1665	47.0	34.0	15.00	13.00
	T*(8,L)X*C20	21.0	FC/PC60C	1595	46.5	32.8	14.75	12.75
	T*(8,L)X*C20	21.0	FC64D	1485	48.5	34.4	16.25	14.00
	T*(8,L)X*C20	21.0	HD60	1665	47.5	33.6	15.00	13.00
	T*(8,L)X*C20	21.0	UC48C	1515	47.0	33.2	15.75	13.50
	T*(8,L)X*C20	21.0	UC60C	1540	47.0	33.2	15.75	13.50
	T*9(C,V)*C16	21.0	FC/MC/PC48C	1590	46.5	33.2	14.25	12.50
	T*9(C,V)*C16	21.0	FC/MC/PC48D	1590	46.5	33.2	14.25	12.50
	T*9(C,V)*C16	21.0	FC/MC/PC60D	1590	46.0	32.6	14.00	12.25
	T*9(C,V)*C16	21.0	FC/MC62D	1590	47.0	33.6	14.50	12.50
	T*9(C,V)*C16	21.0	FC/PC60C	1590	46.0	32.6	14.00	12.25
	T*9(C,V)*C16	21.0	FC64D	1590	48.5	35.4	15.00	13.00
	T*9(C,V)*C16	21.0	HD60	1445	46.0	32.0	14.50	12.50
	T*9(C,V)*C16	21.0	UC48C	1590	46.5	33.2	14.25	12.50
	T*9(C,V)*C16	21.0	UC60C	1590	46.0	32.6	14.00	12.25
	T*9(C,V)*C20	21.0	FC/MC/PC48C	1655	46.5	33.2	14.25	12.50
	T*9(C,V)*C20	21.0	FC/MC/PC48D	1655	46.5	33.2	14.25	12.50
	T*9(C,V)*C20	21.0	FC/MC/PC60D	1655	46.0	32.6	14.00	12.25
	T*9(C,V)*C20	21.0	FC/MC62D	1655	46.5	33.6	14.00	12.25
	T*9(C,V)*C20	21.0	FC/PC60C	1655	46.0	32.6	14.00	12.25
	T*9(C,V)*C20	21.0	FC64D	1655	48.5	35.2	14.50	12.75
	T*9(C,V)*C20	21.0	HD60	1445	46.5	32.0	14.75	12.75
	T*9(C,V)*C20	21.0	UC48C	1655	46.5	33.2	14.25	12.50
	T*9(C,V)*C20	21.0	UC60C	1655	46.0	32.6	14.00	12.25
	T*9(C,V)*D20	24.5	FC/MC/PC48D	1645	46.5	33.2	14.25	12.50
	T*9(C,V)*D20	24.5	FC/MC/PC60D	1445	46.0	31.6	14.75	12.75
	T*9(C,V)*D20	24.5	FC/MC62D	1455	46.5	32.6	15.00	13.00
	T*9(C,V)*D20	24.5	FC64D	1630	48.5	35.4	14.75	13.00
	T*9(C,V)*D20	24.5	HD60	1615	47.0	33.4	14.50	12.50
	T*9(C,V)*D20	24.5	UC48D	1645	46.5	33.2	14.25	12.50
	T*9(C,V)*D20	24.5	UC60D	1615	46.0	32.6	14.00	12.25
	T*9X*C16	21.0	FC/MC/PC48C	1565	47.0	33.4	14.75	12.75
	T*9X*C16	21.0	FC/MC/PC48D	1565	47.0	33.4	14.75	12.75
	T*9X*C16	21.0	FC/MC/PC60D	1575	46.5	32.8	14.50	12.75
	T*9X*C16	21.0	FC/MC62D	1550	47.0	33.8	14.75	12.75
	T*9X*C16	21.0	FC/PC60C	1575	46.5	32.8	14.50	12.75
	T*9X*C16	21.0	FC64D	1460	48.5	34.2	15.75	13.75
	T*9X*C16	21.0	HD60	1575	47.0	33.6	14.75	13.00
	T*9X*C16	21.0	UC48C	1565	47.0	33.4	14.75	12.75
	T*9X*C16	21.0	UC60C	1575	46.0	32.8	14.50	12.50
	T*9X*C20	21.0	FC/MC/PC48C	1615	47.0	33.4	15.00	13.00
	T*9X*C20	21.0	FC/MC/PC48D	1615	47.0	33.4	15.00	13.00
	T*9X*C20	21.0	FC/MC/PC60D	1625	46.5	33.0	14.75	12.75
	T*9X*C20	21.0	FC/MC62D	1595	47.0	34.0	15.00	13.00
	T*9X*C20	21.0	FC/PC60C	1625	46.5	33.0	14.75	12.75
	T*9X*C20	21.0	FC64D	1460	48.5	34.4	16.00	14.00
	T*9X*C20	21.0	HD60	1625	47.5	33.6	15.00	13.00
	T*9X*C20	21.0	UC48C	1615	47.0	33.4	15.00	13.00

For Notes See Page 19.

COOLING CAPACITY - With High Efficiency Motor Furnaces (Continued)

UNIT MODEL	FURNACE		COIL MODEL[1]	COOLING				
	MODEL	WIDTH		RATED CFM	NET MBH		SEER	EER
					TOTAL	SENS.		
16 SEER AC WITH HIGH EFFICIENCY MOTOR FURNACES [2]								
CZF04814(C)	T*9X*C20	21.0	UC60C	1625	46.5	33.0	14.75	12.75
	T*9X*D20	24.5	FC/MC/PC48D	1635	47.0	33.4	14.75	12.75
	T*9X*D20	24.5	FC/MC/PC60D	1490	46.5	32.4	15.50	13.25
	T*9X*D20	24.5	FC/MC62D	1610	47.0	33.8	14.75	12.75
	T*9X*D20	24.5	FC64D	1425	48.5	34.4	16.25	14.00
	T*9X*D20	24.5	HD60	1645	47.0	33.6	14.75	13.00
	T*9X*D20	24.5	UC48D	1635	47.0	33.4	14.75	12.75
	T*9X*D20	24.5	UC60D	1490	46.0	32.4	15.50	13.25
	Y*(8,L)C*C16	21.0	FC/MC/PC48C	1565	46.5	33.0	14.00	12.25
	Y*(8,L)C*C16	21.0	FC/MC/PC48D	1565	46.5	33.0	14.00	12.25
	Y*(8,L)C*C16	21.0	FC/MC/PC60D	1420	45.5	31.4	14.75	12.75
	Y*(8,L)C*C16	21.0	FC/MC62D	1635	47.0	33.8	14.50	12.75
	Y*(8,L)C*C16	21.0	FC/PC60C	1600	46.0	32.6	14.00	12.25
	Y*(8,L)C*C16	21.0	FC64D	1635	48.5	35.4	15.00	13.00
	Y*(8,L)C*C16	21.0	HD60	1625	47.0	33.4	14.50	12.75
	Y*(8,L)C*C16	21.0	UC48C	1615	47.0	33.2	14.25	12.50
	Y*(8,L)C*C16	21.0	UC60C	1625	46.0	32.6	14.25	12.50
	Y*(8,L)C*C20	21.0	FC/MC/PC48C	1640	46.5	33.2	14.25	12.50
	Y*(8,L)C*C20	21.0	FC/MC/PC48D	1640	46.5	33.2	14.25	12.50
	Y*(8,L)C*C20	21.0	FC/MC/PC60D	1340	45.5	30.8	15.00	13.00
	Y*(8,L)C*C20	21.0	FC/MC62D	1620	47.0	33.8	14.75	12.75
	Y*(8,L)C*C20	21.0	FC/PC60C	1340	45.5	30.8	15.00	13.00
	Y*(8,L)C*C20	21.0	FC64D	1410	48.0	33.4	15.75	13.50
	Y*(8,L)C*C20	21.0	HD60	1605	47.0	33.6	14.75	13.00
	Y*(8,L)C*C20	21.0	UC48C	1640	47.0	33.2	14.25	12.50
	Y*(8,L)C*C20	21.0	UC60C	1605	46.0	32.8	14.50	12.75
	Y*9C*C16	21.0	FC/MC/PC48C	1590	46.5	33.2	14.25	12.50
	Y*9C*C16	21.0	FC/MC/PC48D	1590	46.5	33.2	14.25	12.50
	Y*9C*C16	21.0	FC/MC/PC60D	1590	46.0	32.6	14.00	12.25
	Y*9C*C16	21.0	FC/MC62D	1590	47.0	33.6	14.50	12.50
	Y*9C*C16	21.0	FC/PC60C	1590	46.0	32.6	14.00	12.25
	Y*9C*C16	21.0	FC64D	1590	48.5	35.4	15.00	13.00
	Y*9C*C16	21.0	HD60	1445	46.0	32.0	14.50	12.50
	Y*9C*C16	21.0	UC48C	1590	46.5	33.2	14.25	12.50
	Y*9C*C16	21.0	UC60C	1590	46.0	32.6	14.00	12.25
	Y*9C*C20	21.0	FC/MC/PC48C	1655	46.5	33.2	14.25	12.50
	Y*9C*C20	21.0	FC/MC/PC48D	1655	46.5	33.2	14.25	12.50
	Y*9C*C20	21.0	FC/MC/PC60D	1655	46.0	32.6	14.00	12.25
	Y*9C*C20	21.0	FC/MC62D	1655	46.5	33.6	14.00	12.25
	Y*9C*C20	21.0	FC/PC60C	1655	46.0	32.6	14.00	12.25
	Y*9C*C20	21.0	FC64D	1655	48.5	35.2	14.50	12.75
	Y*9C*C20	21.0	HD60	1445	46.5	32.0	14.75	12.75
	Y*9C*C20	21.0	UC48C	1655	46.5	33.2	14.25	12.50
	Y*9C*C20	21.0	UC60C	1655	46.0	32.6	14.00	12.25
	Y*9C*D20	24.5	FC/MC/PC48D	1645	46.5	33.2	14.25	12.50
	Y*9C*D20	24.5	FC/MC/PC60D	1445	46.0	31.6	14.75	12.75
	Y*9C*D20	24.5	FC/MC62D	1455	46.5	32.6	15.00	13.00
	Y*9C*D20	24.5	FC64D	1630	48.5	35.4	14.75	13.00
	Y*9C*D20	24.5	HD60	1615	47.0	33.4	14.50	12.50
	Y*9C*D20	24.5	UC48D	1645	46.5	33.2	14.25	12.50
	Y*9C*D20	24.5	UC60D	1615	46.0	32.6	14.00	12.25

For Notes See Page 19.

COOLING CAPACITY - With High Efficiency Motor Furnaces (Continued)

UNIT MODEL	FURNACE		COIL MODEL[1]	COOLING				
	MODEL	WIDTH		RATED CFM	NET MBH		SEER	EER
					TOTAL	SENS.		
16 SEER AC WITH HIGH EFFICIENCY MOTOR FURNACES [2]								
CZF06013(C)	T*(8,L)C*C20	21.0	FC/MC62D	1600	52.5	36.5	15.00	12.50
	T*(8,L)C*C20	21.0	FC64D	1855	54.5	39.0	15.25	12.75
	T*(8,L)V*C20	21.0	FC/MC62D	1600	52.5	36.5	15.00	12.50
	T*(8,L)V*C20	21.0	FC64D	1855	54.5	39.0	15.25	12.75
	T*(8,L)X*C20	21.0	FC/MC/PC60D	1690	52.0	36.1	15.25	13.00
	T*(8,L)X*C20	21.0	FC/MC62D	1665	53.0	36.9	15.50	13.25
	T*(8,L)X*C20	21.0	FC/PC60C	1595	52.0	35.3	15.00	12.75
	T*(8,L)X*C20	21.0	FC64D	1665	54.5	38.5	16.00	13.25
	T*9(C,V)*C20	21.0	FC/MC62D	1655	52.5	36.5	14.75	12.50
	T*9(C,V)*C20	21.0	FC64D	1655	54.0	37.8	15.25	12.75
	T*9(C,V)*D20	24.0	FC/MC62D	1630	52.5	36.5	15.00	12.75
	T*9(C,V)*D20	24.0	FC64D	1630	54.0	37.6	15.25	12.75
	T*9X*C20	21.0	FC/MC/PC60D	1645	52.0	35.5	15.25	12.75
	T*9X*C20	21.0	FC/MC62D	1595	53.0	36.9	15.50	13.00
	T*9X*C20	21.0	FC/PC60C	1625	52.0	35.5	15.00	12.75
	T*9X*D20	24.0	FC/MC/PC60D	1730	52.5	36.5	15.50	13.00
	T*9X*D20	24.0	FC/MC62D	1645	53.0	36.7	15.25	13.00
	T*9X*D20	24.0	FC64D	1645	54.0	38.0	16.00	13.25
	Y*(8,L)C*C20	21.0	FC/MC62D	1600	52.5	36.5	15.00	12.50
	Y*(8,L)C*C20	21.0	FC64D	1855	54.5	39.0	15.25	12.75
	Y*9C*C20	21.0	FC/MC62D	1655	52.5	36.5	14.75	12.50
	Y*9C*C20	21.0	FC64D	1655	54.0	37.8	15.25	12.75
	Y*9C*D20	24.0	FC/MC62D	1630	52.5	36.5	15.00	12.75
	Y*9C*D20	24.0	FC64D	1630	54.0	37.6	15.25	12.75

1. MC coils available with a factory installed horizontal drain pan. See price pages for specific model number.
2. High Efficiency Motor Furnaces have B.O.D (Blower on Delay) standard.

PSC furnaces, such as the TG8S, TGLS, and TG9S, use Coil Only Ratings.

ACCESSORIES

Start Assist Kit (S1-2SA067) - Provides increased starting torque for areas with low voltage. See Hard Start Kit Accessory Installation Manual for Hard Start Kit part number for each model.

TXV Kits - S1-1TVM series thermal expansion valves precisely meter refrigerant for optimum performance over a wide range of conditions. See System Charge table for TXV part number for each model.

Low Ambient Pressure Switch Kit (S1-2LA06700424) - Allows use of air conditioning at low outdoor ambient temperatures. For use with models containing R-410A refrigerant only.

Dehumidistat (S1-2HU16700124) - Provides increased dehumidification when matched with variable speed furnace or air handler.

Thermostats - Compatible thermostat controls are available through accessory sourcing. For optimum performance, these outdoor units are fully compatible with the **Residential Touch-screen Communicating Control S1-TTSCC01**.

SOUND POWER LEVEL - TYPICAL OCTAVE BAND SPECTRUM ((db re. 1-pW)

Model Number	63	125	250	500	1000	2000	4000	8000	dBA
024	72	75	66	66	61	54	47	40	67
030	70	77	67	69	66	58	51	47	70
036	74	73	70	71	69	63	57	51	73
042	78	72	69	70	67	61	55	48	71
048	72	69	69	70	67	62	57	50	71
060	76	73	74	70	70	62	58	55	74

Rated in accordance with ARI Standard 270.

TYPICAL INSTALLATION

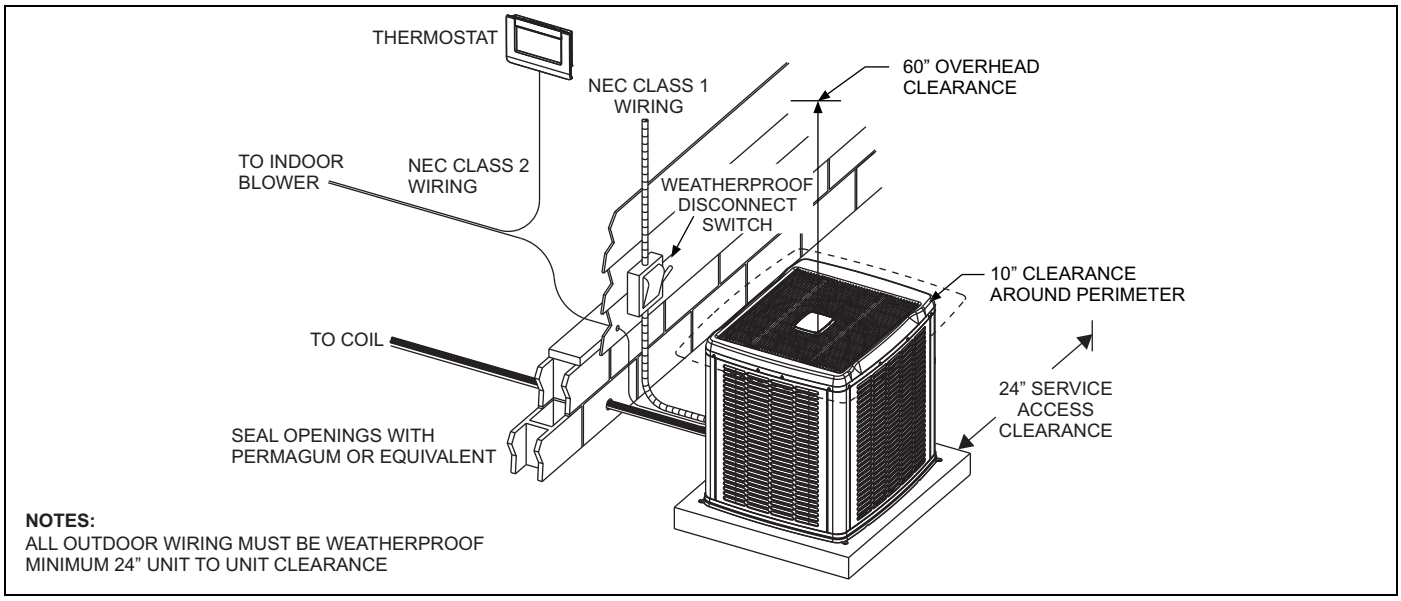

COOLING PERFORMANCE DATA

OUTDOOR UNIT MODEL NO.		CZF02413(C)														
INDOOR COIL MODEL NO.		FC/MC/PC35														
CONDENSER ENTERING AIR TEMPERATURE	ID CFM	600					800					1000				
	ID DB (°F)	80	80	75	80	80	80	80	75	80	80	80	80	75	80	80
	ID WB (°F)	57	62	62	67	72	57	62	62	67	72	57	62	62	67	72
65	T.C.	20.0	22.0	22.8	25.2	28.1	21.7	23.5	24.1	27.1	30.1	23.4	25.0	25.4	29.1	32.1
	S.C.	20.0	19.1	16.8	16.7	13.4	21.7	22.1	18.8	19.1	14.7	23.4	25.0	20.9	21.4	16.0
	K.W.	1.32	1.30	1.30	1.31	1.30	1.38	1.37	1.37	1.38	1.37	1.44	1.45	1.44	1.45	1.45
75	T.C.	19.0	21.2	21.6	24.2	26.9	20.6	22.6	23.1	26.0	28.9	22.2	24.1	24.5	27.8	31.0
	S.C.	19.0	18.7	16.1	16.1	12.9	20.6	21.6	18.2	18.4	14.2	22.2	24.1	20.4	20.7	15.6
	K.W.	1.50	1.49	1.49	1.49	1.49	1.56	1.56	1.56	1.56	1.55	1.63	1.63	1.63	1.63	1.62
85	T.C.	18.0	20.3	20.4	23.1	25.7	19.5	21.8	22.0	24.8	27.7	21.1	23.2	23.6	26.5	29.8
	S.C.	18.0	18.3	15.4	15.5	12.4	19.5	21.1	17.6	17.7	13.8	21.1	23.2	19.8	19.9	15.2
	K.W.	1.68	1.69	1.68	1.67	1.67	1.75	1.75	1.75	1.74	1.73	1.81	1.81	1.82	1.82	1.80
95	T.C.	17.0	19.5	19.3	22.0	24.4	18.4	20.9	21.0	23.6	26.5	19.9	22.4	22.7	25.2	28.6
	S.C.	17.0	17.9	14.7	14.9	11.9	18.4	20.7	17.0	17.0	13.4	19.9	22.4	19.3	19.1	14.8
	K.W.	1.87	1.88	1.88	1.85	1.85	1.93	1.94	1.94	1.93	1.91	2.00	1.99	2.00	2.00	1.98
105	T.C.	16.1	18.3	18.1	20.8	23.2	17.4	19.6	19.6	22.3	25.1	18.8	20.9	21.1	23.8	27.1
	S.C.	16.1	17.2	14.2	14.4	11.4	17.4	19.6	16.4	16.5	12.8	18.8	20.9	18.6	18.5	14.1
	K.W.	2.24	2.23	2.22	2.17	2.15	2.27	2.27	2.27	2.24	2.21	2.31	2.30	2.33	2.30	2.27
115	T.C.	15.2	17.1	17.0	19.6	22.0	16.5	18.3	18.3	21.0	23.7	17.8	19.5	19.6	22.5	25.5
	S.C.	15.2	16.5	13.6	13.9	10.9	16.5	18.3	15.8	15.9	12.2	17.8	19.5	17.9	18.0	13.5
	K.W.	2.61	2.57	2.56	2.49	2.44	2.60	2.59	2.60	2.54	2.50	2.60	2.60	2.64	2.59	2.56
125	T.C.	14.3	15.9	15.9	18.4	20.8	15.5	17.0	17.0	19.8	22.4	16.7	18.1	18.1	21.2	24.0
	S.C.	14.3	15.8	13.1	13.4	10.4	15.5	17.0	15.2	15.4	11.6	16.7	18.1	17.2	17.5	12.8
	K.W.	2.97	2.91	2.90	2.80	2.73	2.93	2.91	2.92	2.84	2.79	2.90	2.90	2.95	2.87	2.85

NOTE: ALL CAPACITIES INCLUDE INDOOR FAN HEAT. KW VALUES ARE FOR THE SYSTEM (OUTDOOR + INDOOR).

Multipliers for determining the performance with other indoor sections.

NOTE: For dry bulb temperatures different than those listed (between 73-87 °F), sensible capacity increases by 1060 BTUH per 1000 CFM per degree above the listed temperature and decreases by 1060 BTUH per 1000 CFM per degree below the listed temperature.

Air Handlers	Coils	T.C.	S.C.	KW
–	FC/MC/PC32	1.00	1.00	1.00
–	FC/MC/PC35	1.00	1.00	1.00
–	FC/MC/PC37	1.02	1.02	1.02
–	FC/MC/PC43	1.02	1.02	1.02
AHE24B	–	1.05	1.00	0.95
AHE30B	–	1.05	1.00	0.95
AHE36C	–	1.08	1.06	0.94
AHR24B	–	1.00	0.98	0.96
AHV24B	–	1.01	0.94	0.93
AHV30B	–	1.02	0.97	0.94
AHV36C	–	1.03	0.98	0.91
AV*36	–	1.05	0.98	0.92
MV12B	FC/MC35B	1.05	1.01	0.94
MV12B	FC/MC43B	1.06	1.01	0.94
MX12B	FC/MC35B	1.06	1.00	0.93
MX12B	FC/MC43B	1.05	0.99	0.92

Continued on next page.

Furnaces	Coils	T.C.	S.C.	KW
T*(8,L)C*A12	FC/MC/PC32A	1.03	0.98	0.94
T*(8,L)C*A12	FC/MC/PC37A	1.06	1.01	0.96
T*(8,L)C*B12	FC/MC/PC35B	1.05	0.99	0.94
T*(8,L)C*B12	FC/MC/PC43B	1.06	1.01	0.94
T*(8,L)C*C16	FC/MC/PC35C	1.05	1.00	0.94
T*(8,L)C*C16	FC/MC/PC43C	1.06	1.01	0.93
T*(8,L)C*C20	FC/MC/PC35C	1.04	0.98	0.93
T*(8,L)C*C20	FC/MC/PC43C	1.05	0.99	0.94
T*(8,L)V*A12	FC/MC/PC32A	1.03	0.98	0.94
T*(8,L)V*A12	FC/MC/PC37A	1.06	1.01	0.96
T*(8,L)V*B12	FC/MC/PC35B	1.05	0.99	0.94
T*(8,L)V*B12	FC/MC/PC43B	1.06	1.01	0.94
T*(8,L)V*C16	FC/MC/PC35C	1.05	1.00	0.94
T*(8,L)V*C16	FC/MC/PC43C	1.06	1.01	0.93
T*(8,L)V*C20	FC/MC/PC35C	1.04	0.98	0.93
T*(8,L)V*C20	FC/MC/PC43C	1.05	0.99	0.94
T*(8,L)X*A12	FC/MC/PC32A	1.05	1.00	0.92
T*(8,L)X*A12	FC/MC/PC37A	1.08	1.05	0.93
T*(8,L)X*B12	FC/MC/PC35B	1.07	1.04	0.92
T*(8,L)X*B12	FC/MC/PC43B	1.08	1.06	0.93
T*(8,L)X*C16	FC/MC/PC35C	1.07	1.05	0.92
T*(8,L)X*C16	FC/MC/PC43C	1.08	1.06	0.93
T*(8,L)X*C20	FC/MC/PC35C	1.07	1.06	0.93
T*(8,L)X*C20	FC/MC/PC43C	1.06	1.01	0.93
T*9(C,V)*B12	FC/MC/PC35B	1.04	0.99	0.96
T*9(C,V)*B12	FC/MC/PC43B	1.06	1.01	0.96
T*9(C,V)*C16	FC/MC/PC35C	1.07	1.06	0.95

Furnaces	Coils	T.C.	S.C.	KW
T*9(C,V)*C16	FC/MC/PC43C	1.06	1.01	0.94
T*9(C,V)*C20	FC/MC/PC35C	1.04	0.98	0.93
T*9(C,V)*C20	FC/MC/PC43C	1.08	1.08	0.95
T*9X*A10	FC/MC/PC32A	1.03	0.96	0.97
T*9X*A10	FC/MC/PC37A	1.03	0.97	0.96
T*9X*B12	FC/MC/PC35B	1.05	1.00	0.92
T*9X*B12	FC/MC/PC43B	1.07	1.02	0.93
T*9X*C16	FC/MC/PC35C	1.05	1.00	0.92
T*9X*C16	FC/MC/PC43C	1.07	1.02	0.93
T*9X*C20	FC/MC/PC35C	1.05	1.00	0.94
T*9X*C20	FC/MC/PC43C	1.06	1.01	0.93
T*9V*A10	FC/MC/PC32A	1.03	0.98	0.99
T*9V*A10	FC/MC/PC37A	1.03	1.00	0.99
Y*(8,L)C*A12	FC/MC/PC32A	1.03	0.98	0.94
Y*(8,L)C*A12	FC/MC/PC37A	1.06	1.01	0.96
Y*(8,L)C*B12	FC/MC/PC35B	1.05	0.99	0.94
Y*(8,L)C*B12	FC/MC/PC43B	1.06	1.01	0.94
Y*(8,L)C*C16	FC/MC/PC35C	1.05	1.00	0.94
Y*(8,L)C*C16	FC/MC/PC43C	1.06	1.01	0.93
Y*(8,L)C*C20	FC/MC/PC35C	1.04	0.98	0.93
Y*(8,L)C*C20	FC/MC/PC43C	1.05	0.99	0.94
Y*9C*B12	FC/MC/PC35B	1.04	0.99	0.96
Y*9C*B12	FC/MC/PC43B	1.06	1.01	0.96
Y*9C*C16	FC/MC/PC35C	1.07	1.06	0.95
Y*9C*C16	FC/MC/PC43C	1.06	1.01	0.94
Y*9C*C20	FC/MC/PC35C	1.04	0.98	0.93
Y*9C*C20	FC/MC/PC43C	1.08	1.08	0.95

COOLING PERFORMANCE DATA

OUTDOOR UNIT MODEL NO.		CZF03013(C)														
INDOOR COIL MODEL NO.		FC/MC/PC43														
CONDENSER ENTERING AIR TEMPERATURE	ID CFM	800					1000					1200				
	ID DB (°F)	80	80	75	80	80	80	80	75	80	80	80	80	75	80	80
	ID WB (°F)	57	62	62	67	72	57	62	62	67	72	57	62	62	67	72
65	T.C.	24.6	29.3	29.4	32.1	34.3	26.9	30.5	30.6	33.0	36.0	29.3	31.8	31.7	33.9	37.7
	S.C.	24.6	24.8	20.7	20.5	15.8	26.9	27.5	23.0	22.0	16.8	29.3	30.3	25.3	23.5	17.8
	KW	1.69	1.68	1.68	1.70	1.71	1.76	1.76	1.76	1.78	1.80	1.84	1.84	1.84	1.86	1.88
75	T.C.	23.8	27.9	28.0	31.0	33.5	25.8	29.2	29.2	32.0	35.0	27.7	30.5	30.3	33.0	36.6
	S.C.	23.8	23.7	20.0	20.0	15.4	25.8	26.4	22.2	21.7	16.5	27.7	29.0	24.4	23.3	17.6
	KW	1.92	1.92	1.92	1.93	1.93	2.00	2.00	1.99	2.00	2.02	2.07	2.08	2.07	2.08	2.10
85	T.C.	23.1	26.6	26.6	29.9	32.6	24.6	27.9	27.8	31.0	34.1	26.2	29.3	29.0	32.1	35.5
	S.C.	23.1	22.6	19.3	19.4	15.1	24.6	25.2	21.4	21.3	16.3	26.2	27.7	23.6	23.2	17.5
	KW	2.16	2.17	2.16	2.15	2.15	2.23	2.24	2.23	2.23	2.23	2.31	2.32	2.30	2.30	2.31
95	T.C.	22.4	25.3	25.2	28.7	31.7	23.5	26.7	26.4	30.0	33.1	24.7	28.0	27.6	31.3	34.5
	S.C.	22.4	21.6	18.5	18.9	14.8	23.5	24.0	20.7	21.0	16.1	24.7	26.5	22.8	23.1	17.4
	KW	2.39	2.42	2.39	2.38	2.37	2.47	2.49	2.46	2.45	2.45	2.54	2.56	2.53	2.52	2.53
105	T.C.	21.6	23.9	23.7	27.2	30.0	22.9	25.3	24.9	28.4	31.4	24.2	26.6	26.0	29.6	32.8
	S.C.	21.6	20.9	17.8	18.2	14.1	22.9	23.3	19.9	20.2	15.4	24.2	25.7	22.0	22.3	16.7
	KW	2.78	2.84	2.79	2.75	2.75	2.84	2.88	2.85	2.82	2.83	2.90	2.92	2.91	2.89	2.91
115	T.C.	20.8	22.6	22.2	25.7	28.4	22.3	23.9	23.4	26.8	29.8	23.7	25.2	24.5	27.9	31.2
	S.C.	20.8	20.3	17.0	17.5	13.5	22.3	22.7	19.1	19.5	14.7	23.7	25.0	21.1	21.4	16.0
	KW	3.16	3.24	3.18	3.11	3.11	3.20	3.25	3.23	3.18	3.20	3.25	3.27	3.29	3.25	3.28
125	T.C.	20.1	21.3	20.8	24.2	26.7	21.7	22.6	21.9	25.3	28.1	23.3	23.9	22.9	26.3	29.5
	S.C.	20.1	19.6	16.3	16.8	12.9	21.7	22.0	18.3	18.7	14.1	23.3	23.9	20.3	20.6	15.3
	KW	3.54	3.65	3.56	3.48	3.48	3.57	3.63	3.61	3.55	3.56	3.60	3.61	3.66	3.61	3.65

NOTE: ALL CAPACITIES INCLUDE INDOOR FAN HEAT. KW VALUES ARE FOR THE SYSTEM (OUTDOOR + INDOOR).

Multipliers for determining the performance with other indoor sections.

NOTE: For dry bulb temperatures different than those listed (between 73-87 °F), sensible capacity increases by 1060 BTUH per 1000 CFM per degree above the listed temperature and decreases by 1060 BTUH per 1000 CFM per degree below the listed temperature.

Air Handlers	Coils	T.C.	S.C.	KW
–	FC/MC/PC32	0.99	0.98	1.01
–	FC/MC/PC35	0.99	0.98	1.01
–	FC/MC/PC37	1.00	1.00	1.00
–	FC/MC/PC43	1.00	1.00	1.00
–	FC/MC/PC48	1.00	1.02	1.00
–	FC/MC/PC60	1.00	1.01	1.00
–	UC48	0.95	0.95	0.99
–	UC60	0.96	0.95	1.00
AHE30B	–	1.00	0.98	0.96
AHE36C	–	1.03	1.01	0.93
AHE42D	–	1.04	1.03	0.93
AHE48D	–	1.03	1.02	0.91
AHR30B	–	1.00	1.03	1.02
AHR36B	–	1.01	1.03	1.01
AHV30B	–	0.99	0.96	0.97

Air Handlers	Coils	T.C.	S.C.	KW
AHV36C	–	0.99	0.95	0.92
AHV42D	–	1.01	1.03	0.92
AV*36	–	1.02	1.00	0.93
MV12B	FC/MC35B	0.99	0.98	0.94
MV12B	FC/MC43B	1.02	1.00	0.94
MV16C	FC/MC35C	1.01	1.01	0.95
MV16C	FC/MC43C	1.03	1.01	0.95
MV16C	FC/MC48C	1.03	1.02	0.94
MX12B	FC/MC35B	1.02	1.03	0.96
MX12B	FC/MC43B	1.04	1.05	0.94
MX16C	FC/MC35C	1.01	0.99	0.92
MX16C	FC/MC43C	1.03	1.01	0.91
MX16C	FC/MC48C	1.04	1.02	0.93

Continued on next page.

Furnaces	Coils	T.C.	S.C.	KW
T*(8,L)C*A12	FC/MC/PC32A	0.98	0.96	1.02
T*(8,L)C*A12	FC/MC/PC37A	1.01	0.98	0.97
T*(8,L)C*B12	FC/MC/PC35B	0.99	0.97	0.97
T*(8,L)C*B12	FC/MC/PC43B	1.02	1.00	0.98
T*(8,L)C*C16	FC/MC/PC35C	0.99	0.98	0.95
T*(8,L)C*C16	FC/MC/PC43C	1.03	1.00	0.95
T*(8,L)C*C16	FC/MC/PC48C	1.03	1.02	0.96
T*(8,L)C*C16	FC/PC60C	1.03	1.04	0.94
T*(8,L)C*C16	UC48C	0.95	0.93	0.93
T*(8,L)C*C16	UC60C	0.95	0.92	0.92
T*(8,L)C*C20	FC/MC/PC35C	0.99	0.98	0.97
T*(8,L)C*C20	FC/MC/PC43C	1.03	1.01	0.93
T*(8,L)C*C20	FC/MC/PC48C	1.03	1.02	0.94
T*(8,L)C*C20	FC/PC60C	1.03	1.01	0.94
T*(8,L)C*C20	UC48C	0.95	0.93	0.93
T*(8,L)C*C20	UC60C	0.95	0.94	0.92
T*(8,L)V*A12	FC/MC/PC32A	0.98	0.96	1.02
T*(8,L)V*A12	FC/MC/PC37A	1.01	0.98	0.97
T*(8,L)V*B12	FC/MC/PC35B	0.99	0.97	0.97
T*(8,L)V*B12	FC/MC/PC43B	1.02	1.00	0.98
T*(8,L)V*C16	FC/MC/PC35C	0.99	0.98	0.95
T*(8,L)V*C16	FC/MC/PC43C	1.03	1.00	0.95
T*(8,L)V*C16	FC/MC/PC48C	1.03	1.02	0.96
T*(8,L)V*C16	FC/PC60C	1.03	1.04	0.94
T*(8,L)V*C16	UC48C	0.95	0.93	0.93
T*(8,L)V*C16	UC60C	0.95	0.92	0.92
T*(8,L)V*C20	FC/MC/PC35C	0.99	0.98	0.97
T*(8,L)V*C20	FC/MC/PC43C	1.03	1.01	0.93
T*(8,L)V*C20	FC/MC/PC48C	1.03	1.02	0.94
T*(8,L)V*C20	FC/PC60C	1.03	1.01	0.94
T*(8,L)V*C20	UC48C	0.95	0.93	0.93
T*(8,L)V*C20	UC60C	0.95	0.94	0.92
T*(8,L)X*A12	FC/MC/PC32A	0.99	0.97	0.97
T*(8,L)X*A12	FC/MC/PC37A	1.04	1.06	0.96
T*(8,L)X*B12	FC/MC/PC35B	1.01	1.02	0.95
T*(8,L)X*B12	FC/MC/PC43B	1.04	1.07	0.96
T*(8,L)X*C16	FC/MC/PC35C	1.01	1.02	0.95
T*(8,L)X*C16	FC/MC/PC43C	1.03	1.01	0.94
T*(8,L)X*C16	FC/MC/PC48C	1.04	1.02	0.93
T*(8,L)X*C16	FC/PC60C	1.04	1.05	0.94
T*(8,L)X*C16	UC48C	0.96	0.93	0.90
T*(8,L)X*C16	UC60C	0.96	0.95	0.92
T*(8,L)X*C20	FC/MC/PC35C	0.97	0.92	0.91
T*(8,L)X*C20	FC/MC/PC43C	1.01	0.96	0.91
T*(8,L)X*C20	FC/MC/PC48C	1.02	0.99	0.91
T*(8,L)X*C20	FC/PC60C	1.02	0.99	0.91
T*9(C,V)*B12	FC/MC/PC35B	0.98	0.97	0.98
T*9(C,V)*B12	FC/MC/PC43B	1.01	0.99	0.99
T*9(C,V)*C16	FC/MC/PC35C	0.99	0.98	0.95
T*9(C,V)*C16	FC/MC/PC43C	1.02	1.00	0.96
T*9(C,V)*C16	FC/MC/PC48C	1.03	1.02	0.96
T*9(C,V)*C16	FC/PC60C	1.03	1.01	0.97
T*9(C,V)*C16	UC48C	0.95	0.93	0.93
T*9(C,V)*C16	UC60C	0.95	0.92	0.93
T*9(C,V)*C20	FC/MC/PC35C	0.99	0.98	0.95
T*9(C,V)*C20	FC/MC/PC43C	1.03	1.00	0.95

Furnaces	Coils	T.C.	S.C.	KW
T*9(C,V)*C20	FC/MC/PC48C	1.03	1.02	0.94
T*9(C,V)*C20	FC/PC60C	1.03	1.01	0.96
T*9(C,V)*C20	UC48C	0.95	0.93	0.93
T*9(C,V)*C20	UC60C	0.95	0.92	0.92
T*9(C,V)*D20	FC/MC/PC48D	1.05	1.06	0.95
T*9(C,V)*D20	FC/MC/PC60D	1.05	1.05	0.97
T*9(C,V)*D20	UC48D	0.98	0.98	0.96
T*9(C,V)*D20	UC60D	0.98	0.97	0.94
T*9X*A10	FC/MC/PC37A	1.00	1.00	1.02
T*9X*B12	FC/MC/PC35B	1.01	1.01	0.95
T*9X*B12	FC/MC/PC43B	1.04	1.05	0.96
T*9X*C16	FC/MC/PC35C	1.01	1.00	0.95
T*9X*C16	FC/MC/PC43C	1.03	1.04	0.96
T*9X*C16	FC/MC/PC48C	1.05	1.06	0.95
T*9X*C16	FC/PC60C	1.05	1.05	0.95
T*9X*C16	UC48C	0.97	0.97	0.95
T*9X*C16	UC60C	0.97	0.97	0.94
T*9X*C20	FC/MC/PC35C	0.97	0.92	0.91
T*9X*C20	FC/MC/PC43C	0.96	0.89	0.90
T*9X*C20	FC/MC/PC48C	0.98	0.90	0.91
T*9X*C20	FC/PC60C	0.98	0.96	0.89
T*9X*D20	FC/MC/PC48D	0.99	0.93	0.91
T*9X*D20	FC/MC/PC60D	0.99	0.97	0.90
Y*(8,L)C*A12	FC/MC/PC32A	0.98	0.96	1.02
Y*(8,L)C*A12	FC/MC/PC37A	1.01	0.98	0.97
Y*(8,L)C*B12	FC/MC/PC35B	0.99	0.97	0.97
Y*(8,L)C*B12	FC/MC/PC43B	1.02	1.00	0.98
Y*(8,L)C*C16	FC/MC/PC35C	0.99	0.98	0.95
Y*(8,L)C*C16	FC/MC/PC43C	1.03	1.00	0.95
Y*(8,L)C*C16	FC/MC/PC48C	1.03	1.02	0.96
Y*(8,L)C*C16	FC/PC60C	1.03	1.04	0.94
Y*(8,L)C*C16	UC48C	0.95	0.93	0.93
Y*(8,L)C*C16	UC60C	0.95	0.92	0.92
Y*(8,L)C*C20	FC/MC/PC35C	0.99	0.98	0.97
Y*(8,L)C*C20	FC/MC/PC43C	1.03	1.01	0.93
Y*(8,L)C*C20	FC/MC/PC48C	1.03	1.02	0.94
Y*(8,L)C*C20	FC/PC60C	1.03	1.01	0.94
Y*(8,L)C*C20	UC48C	0.95	0.93	0.93
Y*(8,L)C*C20	UC60C	0.95	0.94	0.92
Y*9C*B12	FC/MC/PC35B	0.98	0.97	0.98
Y*9C*B12	FC/MC/PC43B	1.01	0.99	0.99
Y*9C*C16	FC/MC/PC35C	0.99	0.98	0.95
Y*9C*C16	FC/MC/PC43C	1.02	1.00	0.96
Y*9C*C16	FC/MC/PC48C	1.03	1.02	0.96
Y*9C*C16	FC/PC60C	1.03	1.01	0.97
Y*9C*C16	UC48C	0.95	0.93	0.93
Y*9C*C16	UC60C	0.95	0.92	0.93
Y*9C*C20	FC/MC/PC35C	0.99	0.98	0.95
Y*9C*C20	FC/MC/PC43C	1.03	1.00	0.95
Y*9C*C20	FC/MC/PC48C	1.03	1.02	0.94
Y*9C*C20	FC/PC60C	1.03	1.01	0.96
Y*9C*C20	UC48C	0.95	0.93	0.93
Y*9C*C20	UC60C	0.95	0.92	0.92
Y*9C*D20	FC/MC/PC48D	1.05	1.06	0.95
Y*9C*D20	FC/MC/PC60D	1.05	1.05	0.97
Y*9C*D20	UC48D	0.98	0.98	0.96
Y*9C*D20	UC60D	0.98	0.97	0.94

COOLING PERFORMANCE DATA

OUTDOOR UNIT MODEL NO.		CZF03613(C)														
INDOOR COIL MODEL NO.		FC/MC/PC43														
CONDENSER ENTERING AIR TEMPERATURE	ID CFM	1000					1200					1400				
	ID DB (°F)	80	80	75	80	80	80	80	75	80	80	80	80	75	80	80
	ID WB (°F)	57	62	62	67	72	57	62	62	67	72	57	62	62	67	72
65	T.C.	30.5	36.1	36.7	39.0	41.1	32.1	37.2	37.5	40.0	41.3	33.7	38.3	38.4	41.0	41.5
	S.C.	30.5	30.7	26.8	25.1	19.5	32.1	33.6	28.7	26.8	20.1	33.7	36.4	30.5	28.4	20.7
	KW	2.04	2.03	2.04	2.04	2.06	2.11	2.11	2.11	2.12	2.13	2.18	2.18	2.18	2.20	2.21
75	T.C.	30.3	34.4	34.8	37.4	39.8	31.9	35.4	35.7	38.3	40.1	33.5	36.4	36.6	39.2	40.4
	S.C.	30.3	30.0	25.8	24.7	19.2	31.9	32.7	27.8	26.5	20.1	33.5	35.3	29.9	28.3	21.0
	KW	2.29	2.29	2.29	2.29	2.30	2.36	2.37	2.36	2.37	2.37	2.43	2.44	2.43	2.44	2.45
85	T.C.	30.1	32.7	33.0	35.9	38.5	31.7	33.6	33.9	36.7	38.9	33.2	34.5	34.8	37.4	39.3
	S.C.	30.1	29.4	24.8	24.2	18.9	31.7	31.8	27.0	26.3	20.1	33.2	34.2	29.3	28.3	21.2
	KW	2.54	2.55	2.55	2.54	2.54	2.61	2.62	2.62	2.61	2.61	2.68	2.69	2.69	2.69	2.69
95	T.C.	29.9	31.1	31.2	34.3	37.2	31.4	31.8	32.1	35.0	37.7	33.0	32.6	33.0	35.7	38.2
	S.C.	29.9	28.7	23.8	23.8	18.7	31.4	30.9	26.2	26.0	20.0	33.0	32.6	28.7	28.2	21.4
	KW	2.80	2.81	2.80	2.79	2.78	2.86	2.88	2.87	2.86	2.85	2.93	2.94	2.94	2.93	2.93
105	T.C.	28.3	28.9	29.1	31.9	34.9	29.7	29.8	29.8	32.6	35.4	31.1	30.7	30.6	33.2	35.8
	S.C.	28.3	27.4	22.6	22.8	17.7	29.7	29.3	24.9	24.9	19.1	31.1	30.7	27.1	27.1	20.5
	KW	3.21	3.21	3.21	3.19	3.15	3.26	3.27	3.28	3.25	3.22	3.32	3.33	3.34	3.32	3.29
115	T.C.	26.7	26.9	27.1	29.6	32.6	27.9	27.9	27.7	30.2	33.1	29.2	28.9	28.3	30.8	33.5
	S.C.	26.7	26.1	21.5	21.8	16.8	27.9	27.8	23.6	23.9	18.3	29.2	28.9	25.7	26.0	19.7
	KW	3.61	3.60	3.62	3.58	3.51	3.65	3.65	3.67	3.64	3.58	3.70	3.70	3.73	3.69	3.65
125	T.C.	25.2	24.8	25.1	27.3	30.4	26.2	26.0	25.5	27.8	30.8	27.3	27.1	25.9	28.4	31.2
	S.C.	25.2	24.8	20.5	20.8	15.9	26.2	26.0	22.3	22.9	17.4	27.3	27.1	24.2	25.0	18.9
	KW	4.00	3.99	4.02	3.97	3.88	4.04	4.03	4.07	4.02	3.94	4.07	4.07	4.11	4.07	4.00

NOTE: ALL CAPACITIES INCLUDE INDOOR FAN HEAT. KW VALUES ARE FOR THE SYSTEM (OUTDOOR + INDOOR).

Multipliers for determining the performance with other indoor sections.

NOTE: For dry bulb temperatures different than those listed (between 73-87 °F), sensible capacity increases by 1060 BTUH per 1000 CFM per degree above the listed temperature and decreases by 1060 BTUH per 1000 CFM per degree below the listed temperature.

Air Handlers	Coils	T.C.	S.C.	KW
–	FC/MC/PC37	1.00	1.00	1.00
–	FC/MC/PC43	1.00	1.00	1.00
–	FC/MC/PC48	1.00	1.00	1.00
–	FC/MC/PC60	1.00	1.00	1.00
–	FC/MC62	1.01	1.00	1.01
–	FC64	1.04	1.05	1.02
–	HD48	1.00	0.99	1.00
–	HD60	1.01	1.00	1.01
–	UC48	0.99	0.99	1.01
–	UC60	0.99	0.98	1.01
AHE36C	–	1.02	1.02	0.96
AHE42D	–	1.03	1.03	0.94
AHE48D	–	1.03	1.02	0.93
AHE60D	–	1.04	1.04	0.93
AHR36B	–	0.99	0.99	1.02
AHR42C	–	1.02	1.02	1.00
AHV36C	–	1.02	1.01	0.98
AHV42D	–	1.02	1.02	0.95
AHV48D	–	1.01	1.00	0.94
AV*36	–	1.02	1.03	0.96
AV*48	–	1.04	1.05	0.94
MV12B	FC/MC43B	1.03	1.02	0.97
MV12D	FC/MC48D	1.05	1.03	0.93
MV12D	FC/MC60D	1.03	1.02	0.95
MV12D	FC/MC62D	1.05	1.05	0.93
MV12D	FC64D	1.06	1.07	0.93
MV16C	FC/MC43C	1.03	1.02	0.95
MV16C	FC/MC48C	1.03	1.03	0.96
MV20D	FC/MC48D	1.05	1.08	0.95
MV20D	FC/MC60D	1.04	1.05	0.94

Air Handlers	Coils	T.C.	S.C.	KW
MV20D	FC/MC62D	1.05	1.08	0.95
MV20D	FC64D	1.06	1.11	0.93
MX12B	FC/MC43B	1.02	1.02	0.98
MX12D	FC/MC48D	1.04	1.02	0.96
MX12D	FC/MC60D	1.05	1.05	0.95
MX12D	FC/MC62D	1.05	1.07	0.94
MX12D	FC64D	1.08	1.12	0.93
MX16C	FC/MC43C	1.02	1.01	0.93
MX16C	FC/MC48C	1.05	1.03	0.93
MX20D	FC/MC60D	1.05	1.07	0.94
MX20D	FC/MC62D	1.05	1.07	0.94
MX20D	FC64D	1.08	1.12	0.93

Furnaces	Coils	T.C.	S.C.	KW
T*(8,L)C*A12	FC/MC/PC37A	1.02	1.02	1.02
T*(8,L)C*B12	FC/MC/PC43B	1.02	1.05	1.02
T*(8,L)C*B12	HD48	1.02	1.02	0.98
T*(8,L)C*C16	FC/MC/PC43C	1.03	1.02	0.97
T*(8,L)C*C16	FC/MC/PC48C	1.03	1.03	0.95
T*(8,L)C*C16	FC/PC60C	1.03	1.02	0.95
T*(8,L)C*C16	HD48	1.03	1.02	0.95
T*(8,L)C*C16	HD60	1.03	1.03	0.96
T*(8,L)C*C16	UC48C	1.01	1.01	0.95
T*(8,L)C*C16	UC60C	1.01	1.00	0.95
T*(8,L)C*C20	FC/MC/PC43C	1.03	1.02	0.97
T*(8,L)C*C20	FC/MC/PC48C	1.03	1.03	0.96
T*(8,L)C*C20	FC/PC60C	1.03	1.02	0.95
T*(8,L)C*C20	HD48	1.03	1.02	0.95
T*(8,L)C*C20	HD60	1.04	1.04	0.94

Continued on next page.

Furnaces	Coils	T.C.	S.C.	KW
T*(8,L)C*C20	UC48C	1.02	1.02	0.94
T*(8,L)C*C20	UC60C	1.01	1.00	0.95
T*(8,L)V*A12	FC/MC/PC37A	1.02	1.02	1.02
T*(8,L)V*B12	FC/MC/PC43B	1.02	1.05	1.02
T*(8,L)V*B12	HD48	1.02	1.02	0.98
T*(8,L)V*C16	FC/MC/PC43C	1.03	1.02	0.97
T*(8,L)V*C16	FC/MC/PC48C	1.03	1.03	0.95
T*(8,L)V*C16	FC/PC60C	1.03	1.02	0.95
T*(8,L)V*C16	HD48	1.03	1.02	0.95
T*(8,L)V*C16	HD60	1.03	1.03	0.96
T*(8,L)V*C16	UC48C	1.01	1.01	0.95
T*(8,L)V*C16	UC60C	1.01	1.00	0.95
T*(8,L)V*C20	FC/MC/PC43C	1.03	1.02	0.97
T*(8,L)V*C20	FC/MC/PC48C	1.03	1.03	0.96
T*(8,L)V*C20	FC/PC60C	1.03	1.02	0.95
T*(8,L)V*C20	HD48	1.03	1.02	0.95
T*(8,L)V*C20	HD60	1.04	1.04	0.94
T*(8,L)V*C20	UC48C	1.02	1.02	0.94
T*(8,L)V*C20	UC60C	1.01	1.00	0.95
T*(8,L)X*A12	FC/MC/PC37A	1.03	1.06	0.99
T*(8,L)X*B12	FC/MC/PC43B	1.04	1.06	0.98
T*(8,L)X*B12	HD48	1.03	1.03	0.94
T*(8,L)X*C16	FC/MC/PC43C	1.03	1.03	0.94
T*(8,L)X*C16	FC/MC/PC48C	1.04	1.03	0.94
T*(8,L)X*C16	FC/PC60C	1.03	1.03	0.92
T*(8,L)X*C16	HD48	1.02	1.00	0.92
T*(8,L)X*C16	HD60	1.03	1.02	0.93
T*(8,L)X*C16	UC48C	1.02	1.02	0.93
T*(8,L)X*C16	UC60C	1.02	1.01	0.92
T*(8,L)X*C20	FC/MC/PC43C	1.03	1.02	0.95
T*(8,L)X*C20	FC/MC/PC48C	1.05	1.07	0.95
T*(8,L)X*C20	FC/PC60C	1.04	1.06	0.94
T*(8,L)X*C20	HD48	1.03	1.02	0.95
T*(8,L)X*C20	HD60	1.04	1.04	0.94
T*(8,L)X*C20	UC48C	1.02	1.05	0.95
T*(8,L)X*C20	UC60C	1.02	1.04	0.95
T*9(C,V)*B12	FC/MC/PC43B	1.02	1.02	1.02
T*9(C,V)*B12	HD48	1.02	1.02	1.00
T*9(C,V)*C16	FC/MC/PC43C	1.02	1.01	1.00
T*9(C,V)*C16	FC/MC/PC48C	1.03	1.02	0.97
T*9(C,V)*C16	FC/PC60C	1.02	1.02	0.98
T*9(C,V)*C16	HD48	1.02	1.02	0.96
T*9(C,V)*C16	HD60	1.03	1.03	0.97
T*9(C,V)*C16	UC48C	1.01	1.01	0.97
T*9(C,V)*C16	UC60C	1.00	0.99	0.98
T*9(C,V)*C20	FC/MC/PC43C	1.02	1.02	0.96
T*9(C,V)*C20	FC/MC/PC48C	1.04	1.08	1.00
T*9(C,V)*C20	FC/PC60C	1.04	1.07	1.00
T*9(C,V)*C20	HD48	1.04	1.06	1.00
T*9(C,V)*C20	HD60	1.05	1.08	1.00
T*9(C,V)*C20	UC48C	1.02	1.05	1.00
T*9(C,V)*C20	UC60C	1.02	1.04	0.98
T*9(C,V)*D20	FC/MC/PC48D	1.03	1.02	0.97
T*9(C,V)*D20	FC/MC/PC60D	1.02	1.01	0.96
T*9(C,V)*D20	FC/MC62D	1.03	1.02	0.96
T*9(C,V)*D20	HD48	1.03	1.02	0.97
T*9(C,V)*D20	HD60	1.03	1.02	0.95
T*9(C,V)*D20	UC48D	1.02	1.01	0.98
T*9(C,V)*D20	UC60D	1.00	0.98	0.96
T*9X*B12	FC/MC/PC43B	1.03	1.06	0.99
T*9X*B12	HD48	1.04	1.06	0.98
T*9X*C16	FC/MC/PC43C	1.03	1.05	0.97

Furnaces	Coils	T.C.	S.C.	KW
T*9X*C16	FC/MC/PC48C	1.04	1.07	0.96
T*9X*C16	FC/PC60C	1.04	1.07	0.96
T*9X*C16	HD48	1.05	1.08	0.97
T*9X*C16	HD60	1.05	1.08	0.95
T*9X*C16	UC48C	1.02	1.05	0.96
T*9X*C16	UC60C	1.02	1.05	0.96
T*9X*C20	FC/MC/PC43C	1.03	1.02	0.95
T*9X*C20	FC/MC/PC48C	1.03	1.03	0.95
T*9X*C20	FC/PC60C	1.03	1.02	0.95
T*9X*C20	HD48	1.03	1.02	0.95
T*9X*C20	HD60	1.04	1.04	0.94
T*9X*C20	UC48C	1.02	1.02	0.96
T*9X*C20	UC60C	1.01	1.00	0.95
T*9X*D20	FC/MC/PC48D	1.04	1.03	0.94
T*9X*D20	FC/MC/PC60D	1.04	1.06	0.94
T*9X*D20	FC/MC62D	1.03	1.02	0.94
T*9X*D20	FC64D	1.05	1.05	0.94
T*9X*D20	HD48	1.05	1.05	0.95
T*9X*D20	HD60	1.05	1.05	0.95
T*9X*D20	UC48D	1.02	1.02	0.95
T*9X*D20	UC60D	1.02	1.03	0.93
Y*(8,L)C*A12	FC/MC/PC37A	1.02	1.02	1.02
Y*(8,L)C*B12	FC/MC/PC43B	1.02	1.05	1.02
Y*(8,L)C*B12	HD48	1.02	1.02	0.98
Y*(8,L)C*C16	FC/MC/PC43C	1.03	1.02	0.97
Y*(8,L)C*C16	FC/MC/PC48C	1.03	1.03	0.95
Y*(8,L)C*C16	FC/PC60C	1.03	1.02	0.95
Y*(8,L)C*C16	HD48	1.03	1.02	0.95
Y*(8,L)C*C16	HD60	1.03	1.03	0.96
Y*(8,L)C*C16	UC48C	1.01	1.01	0.95
Y*(8,L)C*C16	UC60C	1.01	1.00	0.95
Y*(8,L)C*C20	FC/MC/PC43C	1.03	1.02	0.97
Y*(8,L)C*C20	FC/MC/PC48C	1.03	1.03	0.96
Y*(8,L)C*C20	FC/PC60C	1.03	1.02	0.95
Y*(8,L)C*C20	HD48	1.03	1.02	0.95
Y*(8,L)C*C20	HD60	1.04	1.04	0.94
Y*(8,L)C*C20	UC48C	1.02	1.02	0.94
Y*(8,L)C*C20	UC60C	1.01	1.00	0.95
Y*9C*B12	FC/MC/PC43B	1.02	1.02	1.02
Y*9C*B12	HD48	1.02	1.02	1.00
Y*9C*C16	FC/MC/PC43C	1.02	1.01	1.00
Y*9C*C16	FC/MC/PC48C	1.03	1.02	0.97
Y*9C*C16	FC/PC60C	1.02	1.02	0.98
Y*9C*C16	HD48	1.02	1.02	0.96
Y*9C*C16	HD60	1.03	1.03	0.97
Y*9C*C16	UC48C	1.01	1.01	0.97
Y*9C*C16	UC60C	1.00	0.99	0.98
Y*9C*C20	FC/MC/PC43C	1.02	1.02	0.96
Y*9C*C20	FC/MC/PC48C	1.04	1.08	1.00
Y*9C*C20	FC/PC60C	1.04	1.07	1.00
Y*9C*C20	HD48	1.04	1.06	1.00
Y*9C*C20	HD60	1.05	1.08	1.00
Y*9C*C20	UC48C	1.02	1.05	1.00
Y*9C*C20	UC60C	1.02	1.04	0.98
Y*9C*D20	FC/MC/PC48D	1.03	1.02	0.97
Y*9C*D20	FC/MC/PC60D	1.02	1.01	0.96
Y*9C*D20	FC/MC62D	1.03	1.02	0.96
Y*9C*D20	HD48	1.03	1.02	0.97
Y*9C*D20	HD60	1.03	1.02	0.95
Y*9C*D20	UC48D	1.02	1.01	0.98
Y*9C*D20	UC60D	1.00	0.98	0.96

COOLING PERFORMANCE DATA

OUTDOOR UNIT MODEL NO.		CZF04213(C)														
INDOOR COIL MODEL NO.		FC/MC62														
CONDENSER ENTERING AIR TEMPERATURE	ID CFM	1200					1400					1600				
	ID DB (°F)	80	80	75	80	80	80	80	75	80	80	80	80	75	80	80
	ID WB (°F)	57	62	62	67	72	57	62	62	67	72	57	62	62	67	72
65	T.C.	39.4	42.1	42.1	46.0	49.2	41.2	42.7	42.7	47.0	50.4	43.0	43.3	43.2	48.0	51.7
	S.C.	39.4	35.7	30.5	30.5	24.0	41.2	38.3	32.2	32.5	25.2	42.9	41.0	34.0	34.5	26.4
	KW	2.43	2.44	2.43	2.45	2.46	2.51	2.52	2.50	2.53	2.53	2.59	2.60	2.58	2.61	2.61
75	T.C.	38.5	40.5	40.5	44.3	47.6	40.1	41.2	41.1	45.2	48.7	41.8	41.9	41.7	46.0	49.7
	S.C.	38.5	35.2	29.9	29.8	23.5	40.1	37.8	31.7	31.8	24.7	41.8	40.4	33.6	33.7	25.9
	KW	2.73	2.74	2.73	2.73	2.74	2.81	2.82	2.81	2.81	2.82	2.89	2.90	2.88	2.89	2.90
85	T.C.	37.6	38.9	38.8	42.7	46.1	39.0	39.7	39.5	43.3	46.9	40.5	40.4	40.2	44.0	47.7
	S.C.	37.6	34.7	29.2	29.1	23.0	39.0	37.3	31.2	31.0	24.2	40.5	39.8	33.2	32.9	25.5
	KW	3.03	3.04	3.04	3.02	3.03	3.11	3.11	3.11	3.10	3.11	3.19	3.19	3.18	3.18	3.19
95	T.C.	36.6	37.3	37.1	41.0	44.5	38.0	38.1	37.9	41.5	45.1	39.3	39.0	38.7	42.0	45.7
	S.C.	36.6	34.2	28.6	28.3	22.5	38.0	36.7	30.7	30.2	23.7	39.3	39.0	32.7	32.1	25.0
	KW	3.34	3.34	3.34	3.31	3.31	3.41	3.41	3.41	3.39	3.39	3.49	3.49	3.48	3.46	3.48
105	T.C.	34.8	35.1	34.9	38.4	42.0	36.1	35.9	35.6	38.9	42.5	37.4	36.8	36.3	39.4	43.1
	S.C.	34.8	33.1	27.6	27.3	21.6	36.1	35.1	29.7	29.2	22.8	37.4	36.8	31.8	31.1	24.1
	KW	3.89	3.88	3.87	3.80	3.78	3.94	3.94	3.93	3.87	3.85	3.99	4.00	3.99	3.94	3.93
115	T.C.	33.0	32.9	32.7	35.9	39.5	34.3	33.8	33.3	36.4	40.0	35.5	34.6	34.0	36.8	40.6
	S.C.	33.0	31.9	26.7	26.4	20.7	34.3	33.5	28.8	28.3	22.0	35.5	34.6	30.8	30.1	23.2
	KW	4.42	4.41	4.38	4.27	4.24	4.45	4.45	4.44	4.34	4.30	4.49	4.49	4.49	4.40	4.36
125	T.C.	31.3	30.8	30.5	33.4	37.0	32.4	31.6	31.0	33.8	37.5	33.6	32.4	31.6	34.3	38.0
	S.C.	31.3	30.8	25.8	25.4	19.8	32.4	31.6	27.8	27.3	21.1	33.6	32.4	29.9	29.2	22.4
	KW	4.96	4.94	4.90	4.75	4.69	4.97	4.96	4.94	4.81	4.74	4.98	4.99	4.98	4.86	4.80

NOTE: ALL CAPACITIES INCLUDE INDOOR FAN HEAT. KW VALUES ARE FOR THE SYSTEM (OUTDOOR + INDOOR).

Multipliers for determining the performance with other indoor sections.

NOTE: For dry bulb temperatures different than those listed (between 73-87 °F), sensible capacity increases by 1060 BTUH per 1000 CFM per degree above the listed temperature and decreases by 1060 BTUH per 1000 CFM per degree below the listed temperature.

Air Handlers	Coils	T.C.	S.C.	KW
–	FC/MC/PC60	1.00	1.00	1.02
–	FC/MC62	1.00	1.00	1.00
–	FC64	1.02	1.05	1.00
–	HD60	1.01	1.02	1.01
–	UC60	0.98	0.98	1.02
AHE42D	–	0.98	1.01	0.92
AHE48D	–	1.01	1.03	0.94
AHE60D	–	1.02	1.06	0.91
AHR42C	–	0.96	1.00	1.00
AHR48D	–	0.99	0.99	1.03
AHR60D	–	1.00	1.02	1.00
AHV42D	–	0.99	0.99	0.93
AHV48D	–	0.99	0.97	0.93
AHV60D	–	1.00	1.01	0.94
AV*48	–	1.01	1.03	0.94
AV*60	–	1.01	1.03	0.94
MV16C	FC/MC43C	0.96	0.98	0.93
MV16C	FC/MC48C	0.98	0.98	0.92
MV16C	FC60C	1.01	1.02	0.95
MV20D	FC/MC48D	0.99	1.03	0.91
MV20D	FC/MC60D	1.01	1.02	0.94
MV20D	FC/MC62D	1.02	1.06	0.95
MV20D	FC64D	1.04	1.07	0.92
MX16C	FC/MC43C	0.96	0.99	0.93
MX16C	FC/MC48C	0.98	0.99	0.89
MX16C	FC60C	1.02	1.05	0.95
MX20D	FC/MC48D	0.98	1.01	0.90

Air Handlers	Coils	T.C.	S.C.	KW
MX20D	FC/MC60D	1.04	1.07	0.94
MX20D	FC/MC62D	1.05	1.09	0.93
MX20D	FC64D	1.07	1.13	0.94

Furnaces	Coils	T.C.	S.C.	KW
T*(8,L)C*C16	FC/MC/PC60D	1.01	1.01	0.97
T*(8,L)C*C16	FC/MC62D	1.01	1.03	0.97
T*(8,L)C*C16	FC/PC60C	1.01	1.01	0.97
T*(8,L)C*C16	FC64D	1.04	1.07	0.96
T*(8,L)C*C16	HD48	0.96	0.97	0.94
T*(8,L)C*C16	HD60	1.02	1.03	0.97
T*(8,L)C*C16	UC60C	0.99	0.99	0.97
T*(8,L)C*C20	FC/MC/PC48C	0.96	0.98	0.93
T*(8,L)C*C20	FC/MC/PC48D	0.96	0.98	0.93
T*(8,L)C*C20	FC/MC/PC60D	1.01	1.02	0.95
T*(8,L)C*C20	FC/MC62D	1.02	1.03	0.97
T*(8,L)C*C20	FC/PC60C	1.01	1.02	0.95
T*(8,L)C*C20	FC64D	1.04	1.07	0.94
T*(8,L)C*C20	HD48	0.96	0.97	0.93
T*(8,L)C*C20	HD60	1.02	1.04	0.95
T*(8,L)C*C20	UC60C	0.99	1.00	0.95
T*(8,L)V*C16	FC/MC/PC60D	1.01	1.01	0.97
T*(8,L)V*C16	FC/MC62D	1.01	1.03	0.97
T*(8,L)V*C16	FC/PC60C	1.01	1.01	0.97
T*(8,L)V*C16	FC64D	1.04	1.07	0.96
T*(8,L)V*C16	HD48	0.96	0.97	0.94
T*(8,L)V*C16	HD60	1.02	1.03	0.97

Continued on next page.

Furnaces	Coils	T.C.	S.C.	KW
T*(8,L)V*C16	UC60C	0.99	0.99	0.97
T*(8,L)V*C20	FC/MC/PC48C	0.96	0.98	0.93
T*(8,L)V*C20	FC/MC/PC48D	0.96	0.98	0.93
T*(8,L)V*C20	FC/MC/PC60D	1.01	1.02	0.95
T*(8,L)V*C20	FC/MC62D	1.02	1.03	0.97
T*(8,L)V*C20	FC/PC60C	1.01	1.02	0.95
T*(8,L)V*C20	FC64D	1.04	1.07	0.94
T*(8,L)V*C20	HD48	0.96	0.97	0.93
T*(8,L)V*C20	HD60	1.02	1.04	0.95
T*(8,L)V*C20	UC60C	0.99	1.00	0.95
T*(8,L)X*C16	FC/MC/PC48C	0.98	0.99	0.90
T*(8,L)X*C16	FC/MC/PC48D	0.98	0.99	0.90
T*(8,L)X*C16	FC/MC/PC60D	1.01	1.03	0.92
T*(8,L)X*C16	FC/MC62D	1.02	1.04	0.93
T*(8,L)X*C16	FC/PC60C	1.01	1.03	0.94
T*(8,L)X*C16	FC64D	1.05	1.07	0.93
T*(8,L)X*C16	HD48	0.98	0.99	0.92
T*(8,L)X*C16	HD60	1.04	1.05	0.98
T*(8,L)X*C16	UC60C	1.00	1.01	0.94
T*(8,L)X*C20	FC/MC/PC48C	0.98	1.02	0.90
T*(8,L)X*C20	FC/MC/PC48D	0.98	1.02	0.90
T*(8,L)X*C20	FC/MC/PC60D	1.01	1.05	0.94
T*(8,L)X*C20	FC/MC62D	1.04	1.08	0.94
T*(8,L)X*C20	FC/PC60C	1.02	1.06	0.95
T*(8,L)X*C20	FC64D	1.05	1.11	0.93
T*(8,L)X*C20	HD48	0.98	1.01	0.92
T*(8,L)X*C20	HD60	1.04	1.08	0.98
T*(8,L)X*C20	UC60C	1.00	1.02	0.94
T*9(C,V)*C16	FC/MC/PC48C	0.96	0.97	0.94
T*9(C,V)*C16	FC/MC/PC48D	0.96	0.97	0.94
T*9(C,V)*C16	FC/MC/PC60D	1.00	1.01	1.00
T*9(C,V)*C16	FC/MC62D	1.01	1.02	1.01
T*9(C,V)*C16	FC/PC60C	1.00	1.01	1.00
T*9(C,V)*C16	FC64D	1.02	1.05	0.98
T*9(C,V)*C16	HD48	0.96	0.97	0.94
T*9(C,V)*C16	HD60	1.01	1.03	0.99
T*9(C,V)*C16	UC60C	0.98	0.99	1.00
T*9(C,V)*C20	FC/MC/PC48C	0.96	0.97	0.94
T*9(C,V)*C20	FC/MC/PC48D	0.96	0.97	0.94
T*9(C,V)*C20	FC/MC/PC60D	1.00	1.01	0.98
T*9(C,V)*C20	FC/MC62D	1.01	1.03	0.97
T*9(C,V)*C20	FC/PC60C	1.00	1.01	0.98
T*9(C,V)*C20	FC64D	1.04	1.06	0.98
T*9(C,V)*C20	HD60	1.02	1.03	0.98
T*9(C,V)*C20	UC60C	0.99	0.99	0.99
T*9(C,V)*D20	FC/MC/PC48D	0.96	0.97	0.94
T*9(C,V)*D20	FC/MC/PC60D	1.01	1.01	0.97
T*9(C,V)*D20	FC/MC62D	1.01	1.03	0.97
T*9(C,V)*D20	FC64D	1.04	1.07	0.98
T*9(C,V)*D20	HD48	0.96	0.97	0.94
T*9(C,V)*D20	HD60	1.02	1.03	0.97
T*9(C,V)*D20	UC60D	0.99	0.99	0.97
T*9X*C16	FC/MC/PC48C	0.96	0.98	0.91
T*9X*C16	FC/MC/PC48D	0.96	0.98	0.91
T*9X*C16	FC/MC/PC60D	1.01	1.01	0.95
T*9X*C16	FC/MC62D	1.01	1.03	0.95
T*9X*C16	FC/PC60C	1.01	1.01	0.95
T*9X*C16	FC64D	1.04	1.07	0.94
T*9X*C16	HD48	0.96	0.98	0.93

Furnaces	Coils	T.C.	S.C.	KW
T*9X*C16	HD60	1.02	1.04	0.95
T*9X*C16	UC60C	0.99	0.99	0.97
T*9X*C20	FC/MC/PC48C	0.98	0.99	0.92
T*9X*C20	FC/MC/PC48D	0.98	0.99	0.92
T*9X*C20	FC/MC/PC60D	1.01	1.02	0.94
T*9X*C20	FC/MC62D	1.02	1.03	0.95
T*9X*C20	FC/PC60C	1.01	1.02	0.95
T*9X*C20	FC64D	1.04	1.07	0.94
T*9X*C20	HD48	0.96	0.98	0.91
T*9X*C20	HD60	1.02	1.04	0.95
T*9X*C20	UC60C	0.99	1.00	0.95
T*9X*D20	FC/MC/PC48D	0.98	0.99	0.92
T*9X*D20	FC/MC/PC60D	1.02	1.07	0.93
T*9X*D20	FC/MC62D	1.02	1.04	0.95
T*9X*D20	FC64D	1.04	1.07	0.94
T*9X*D20	HD48	0.96	0.98	0.91
T*9X*D20	HD60	1.04	1.04	0.94
T*9X*D20	UC60D	1.01	1.03	0.95
Y*(8,L)C*C16	FC/MC/PC60D	1.01	1.01	0.97
Y*(8,L)C*C16	FC/MC62D	1.01	1.03	0.97
Y*(8,L)C*C16	FC/PC60C	1.01	1.01	0.97
Y*(8,L)C*C16	FC64D	1.04	1.07	0.96
Y*(8,L)C*C16	HD48	0.96	0.97	0.94
Y*(8,L)C*C16	HD60	1.02	1.03	0.97
Y*(8,L)C*C16	UC60C	0.99	0.99	0.97
Y*(8,L)C*C20	FC/MC/PC48C	0.96	0.98	0.93
Y*(8,L)C*C20	FC/MC/PC48D	0.96	0.98	0.93
Y*(8,L)C*C20	FC/MC/PC60D	1.01	1.02	0.95
Y*(8,L)C*C20	FC/MC62D	1.02	1.03	0.97
Y*(8,L)C*C20	FC/PC60C	1.01	1.02	0.95
Y*(8,L)C*C20	FC64D	1.04	1.07	0.94
Y*(8,L)C*C20	HD48	0.96	0.97	0.93
Y*(8,L)C*C20	HD60	1.02	1.04	0.95
Y*(8,L)C*C20	UC60C	0.99	1.00	0.95
Y*9C*C16	FC/MC/PC48C	0.96	0.97	0.94
Y*9C*C16	FC/MC/PC48D	0.96	0.97	0.94
Y*9C*C16	FC/MC/PC60D	1.00	1.01	1.00
Y*9C*C16	FC/MC62D	1.01	1.02	1.01
Y*9C*C16	FC/PC60C	1.00	1.01	1.00
Y*9C*C16	FC64D	1.02	1.05	0.98
Y*9C*C16	HD48	0.96	0.97	0.94
Y*9C*C16	HD60	1.01	1.03	0.99
Y*9C*C16	UC60C	0.98	0.99	1.00
Y*9C*C20	FC/MC/PC48C	0.96	0.97	0.94
Y*9C*C20	FC/MC/PC48D	0.96	0.97	0.94
Y*9C*C20	FC/MC/PC60D	1.00	1.01	0.98
Y*9C*C20	FC/MC62D	1.01	1.03	0.97
Y*9C*C20	FC/PC60C	1.00	1.01	0.98
Y*9C*C20	FC64D	1.04	1.06	0.98
Y*9C*C20	HD60	1.02	1.03	0.98
Y*9C*C20	UC60C	0.99	0.99	0.99
Y*9C*D20	FC/MC/PC48D	0.96	0.97	0.94
Y*9C*D20	FC/MC/PC60D	1.01	1.01	0.97
Y*9C*D20	FC/MC62D	1.01	1.03	0.97
Y*9C*D20	FC64D	1.04	1.07	0.98
Y*9C*D20	HD48	0.96	0.97	0.94
Y*9C*D20	HD60	1.02	1.03	0.97
Y*9C*D20	UC60D	0.99	0.99	0.97

COOLING PERFORMANCE DATA

OUTDOOR UNIT MODEL NO.		CZF04814(C)														
INDOOR COIL MODEL NO.		FC64														
CONDENSER ENTERING AIR TEMPERATURE	ID CFM	1400					1600					1800				
	ID DB (°F)	80	80	75	80	80	80	80	75	80	80	80	80	75	80	80
	ID WB (°F)	57	62	62	67	72	57	62	62	67	72	57	62	62	67	72
65	T.C.	46.4	48.8	51.6	53.1	57.6	48.1	50.1	51.1	54.4	58.1	49.8	51.3	50.6	55.6	58.6
	S.C.	46.4	41.1	36.9	34.6	26.5	48.1	44.0	37.6	37.0	28.0	49.8	47.0	38.3	39.3	29.6
	KW	2.57	2.59	2.58	2.60	2.61	2.59	2.60	2.59	2.61	2.62	2.60	2.61	2.60	2.62	2.63
75	T.C.	45.0	47.3	48.8	51.2	55.6	46.6	48.3	48.7	52.2	56.2	48.2	49.4	48.6	53.3	56.8
	S.C.	45.0	40.9	35.7	34.0	26.1	46.6	43.7	37.0	36.2	27.5	48.2	46.5	38.2	38.4	28.9
	KW	2.97	2.98	2.98	2.99	3.00	2.97	2.98	2.98	3.00	3.00	2.98	2.99	2.99	3.00	3.00
85	T.C.	43.6	45.8	46.0	49.3	53.7	45.1	46.6	46.3	50.1	54.3	46.6	47.4	46.6	50.9	54.9
	S.C.	43.6	40.7	34.6	33.3	25.6	45.1	43.3	36.3	35.4	26.9	46.6	46.0	38.1	37.5	28.3
	KW	3.36	3.37	3.37	3.38	3.40	3.36	3.37	3.38	3.38	3.39	3.36	3.37	3.38	3.38	3.37
95	T.C.	42.1	44.3	43.2	47.4	51.7	43.6	44.9	43.9	48.0	52.4	45.1	45.5	44.6	48.6	53.1
	S.C.	42.1	40.5	33.4	32.7	25.2	43.6	43.0	35.7	34.6	26.4	45.1	45.5	38.0	36.5	27.6
	KW	3.75	3.76	3.77	3.77	3.80	3.74	3.75	3.77	3.76	3.77	3.73	3.75	3.77	3.76	3.75
105	T.C.	40.2	41.5	40.5	44.9	49.0	41.6	42.4	41.3	45.4	49.7	43.0	43.2	42.0	46.0	50.4
	S.C.	40.2	39.2	32.1	31.8	24.2	41.6	41.3	34.5	33.8	25.6	43.0	43.2	36.8	35.9	27.0
	KW	4.42	4.41	4.43	4.42	4.43	4.40	4.39	4.43	4.41	4.41	4.37	4.37	4.42	4.39	4.39
115	T.C.	38.4	38.9	37.9	42.4	46.3	39.7	40.0	38.7	43.0	47.0	41.0	41.1	39.6	43.6	47.8
	S.C.	38.4	37.9	30.9	31.0	23.3	39.7	39.7	33.3	33.1	24.8	41.0	41.1	35.7	35.2	26.4
	KW	5.08	5.05	5.08	5.05	5.05	5.04	5.01	5.06	5.03	5.03	4.99	4.97	5.05	5.01	5.01
125	T.C.	36.5	36.2	35.2	39.9	43.6	37.7	37.6	36.1	40.5	44.4	38.9	38.9	37.1	41.1	45.2
	S.C.	36.5	36.2	29.6	30.2	22.3	37.7	37.6	32.1	32.4	24.0	38.9	38.9	34.6	34.6	25.8
	KW	5.74	5.69	5.72	5.69	5.67	5.67	5.63	5.70	5.66	5.65	5.61	5.58	5.67	5.63	5.63

NOTE: ALL CAPACITIES INCLUDE INDOOR FAN HEAT. KW VALUES ARE FOR THE SYSTEM (OUTDOOR + INDOOR).

Multipliers for determining the performance with other indoor sections.

NOTE: For dry bulb temperatures different than those listed (between 73-87 °F), sensible capacity increases by 1060 BTUH per 1000 CFM per degree above the listed temperature and decreases by 1060 BTUH per 1000 CFM per degree below the listed temperature.

Air Handlers	Coils	T.C.	S.C.	KW
–	FC/MC/PC48	0.97	0.95	1.01
–	FC/MC/PC60	0.96	0.94	1.02
–	FC/MC62	0.97	0.97	1.01
–	FC64	1.00	1.00	1.00
–	HD60	0.97	0.96	1.01
–	UC48	0.97	0.95	1.01
–	UC60	0.95	0.94	1.01
AHE48D	–	0.97	0.96	0.95
AHE60D	–	0.98	0.98	0.94
AHR48D	–	0.96	0.94	1.02
AHR60D	–	0.98	0.98	1.00
AHV48D	–	0.97	0.95	0.97
AHV60D	–	0.98	0.97	0.96
AV*48	–	0.98	0.97	0.96
AV*60	–	0.99	0.97	0.95
MV16C	FC/MC48C	0.98	0.97	0.96
MV16C	FC60C	0.97	0.95	0.97
MV20D	FC/MC48D	0.98	0.97	0.94
MV20D	FC/MC60D	0.97	0.95	0.97
MV20D	FC/MC62D	0.98	0.98	0.94
MV20D	FC64D	1.00	0.97	0.93
MX16C	FC/MC48C	0.99	0.99	0.97
MX16C	FC60C	0.98	0.96	0.94
MX20D	FC/MC48D	0.99	0.97	0.95
MX20D	FC/MC60D	0.98	0.96	0.94
MX20D	FC/MC62D	0.99	0.99	0.93
MX20D	FC64D	1.01	0.99	0.90

Furnaces	Coils	T.C.	S.C.	KW
T*(8,L)C*C16	FC/MC/PC48C	0.97	0.95	1.01
T*(8,L)C*C16	FC/MC/PC48D	0.97	0.95	1.01
T*(8,L)C*C16	FC/MC/PC60D	0.95	0.91	0.95
T*(8,L)C*C16	FC/MC62D	0.98	0.98	0.98
T*(8,L)C*C16	FC/PC60C	0.96	0.94	1.00
T*(8,L)C*C16	FC64D	1.01	1.02	0.99
T*(8,L)C*C16	HD60	0.98	0.97	0.98
T*(8,L)C*C16	UC48C	0.98	0.96	1.00
T*(8,L)C*C16	UC60C	0.96	0.94	0.98
T*(8,L)C*C20	FC/MC/PC48C	0.97	0.96	0.99
T*(8,L)C*C20	FC/MC/PC48D	0.97	0.96	0.99
T*(8,L)C*C20	FC/MC/PC60D	0.95	0.89	0.93
T*(8,L)C*C20	FC/MC62D	0.98	0.98	0.98
T*(8,L)C*C20	FC/PC60C	0.95	0.89	0.93
T*(8,L)C*C20	FC64D	1.00	0.97	0.94
T*(8,L)C*C20	HD60	0.98	0.97	0.96
T*(8,L)C*C20	UC48C	0.98	0.96	1.00
T*(8,L)C*C20	UC60C	0.96	0.95	0.96
T*(8,L)V*C16	FC/MC/PC48C	0.97	0.95	1.01
T*(8,L)V*C16	FC/MC/PC48D	0.97	0.95	1.01
T*(8,L)V*C16	FC/MC/PC60D	0.95	0.91	0.95
T*(8,L)V*C16	FC/MC62D	0.98	0.98	0.98
T*(8,L)V*C16	FC/PC60C	0.96	0.94	1.00
T*(8,L)V*C16	FC64D	1.01	1.02	0.99
T*(8,L)V*C16	HD60	0.98	0.97	0.98
T*(8,L)V*C16	UC48C	0.98	0.96	1.00
T*(8,L)V*C16	UC60C	0.96	0.94	0.98

Continued on next page.

Furnaces	Coils	T.C.	S.C.	KW
T*(8,L)V*C20	FC/MC/PC48C	0.97	0.96	0.99
T*(8,L)V*C20	FC/MC/PC48D	0.97	0.96	0.99
T*(8,L)V*C20	FC/MC/PC60D	0.95	0.89	0.93
T*(8,L)V*C20	FC/MC62D	0.98	0.98	0.98
T*(8,L)V*C20	FC/PC60C	0.95	0.89	0.93
T*(8,L)V*C20	FC64D	1.00	0.97	0.94
T*(8,L)V*C20	HD60	0.98	0.97	0.96
T*(8,L)V*C20	UC48C	0.98	0.96	1.00
T*(8,L)V*C20	UC60C	0.96	0.95	0.96
T*(8,L)X*C16	FC/MC/PC48C	0.98	0.97	0.96
T*(8,L)X*C16	FC/MC/PC48D	0.98	0.97	0.96
T*(8,L)X*C16	FC/MC/PC60D	0.97	0.95	0.97
T*(8,L)X*C16	FC/MC62D	0.98	0.98	0.96
T*(8,L)X*C16	FC/PC60C	0.97	0.95	0.97
T*(8,L)X*C16	FC64D	1.01	1.03	0.97
T*(8,L)X*C16	HD60	0.98	0.97	0.96
T*(8,L)X*C16	UC48C	0.98	0.97	0.96
T*(8,L)X*C16	UC60C	0.96	0.95	0.96
T*(8,L)X*C20	FC/MC/PC48C	0.98	0.97	0.96
T*(8,L)X*C20	FC/MC/PC48D	0.98	0.97	0.96
T*(8,L)X*C20	FC/MC/PC60D	0.97	0.95	0.97
T*(8,L)X*C20	FC/MC62D	0.98	0.98	0.96
T*(8,L)X*C20	FC/PC60C	0.97	0.95	0.97
T*(8,L)X*C20	FC64D	1.01	0.99	0.92
T*(8,L)X*C20	HD60	0.99	0.97	0.97
T*(8,L)X*C20	UC48C	0.98	0.96	0.92
T*(8,L)X*C20	UC60C	0.98	0.96	0.92
T*9(C,V)*C16	FC/MC/PC48C	0.97	0.96	0.99
T*9(C,V)*C16	FC/MC/PC48D	0.97	0.96	0.99
T*9(C,V)*C16	FC/MC/PC60D	0.96	0.94	1.00
T*9(C,V)*C16	FC/MC62D	0.98	0.97	1.00
T*9(C,V)*C16	FC/PC60C	0.96	0.94	1.00
T*9(C,V)*C16	FC64D	1.01	1.02	0.99
T*9(C,V)*C16	HD60	0.96	0.92	0.98
T*9(C,V)*C16	UC48C	0.97	0.96	0.99
T*9(C,V)*C16	UC60C	0.96	0.94	1.00
T*9(C,V)*C20	FC/MC/PC48C	0.97	0.96	0.99
T*9(C,V)*C20	FC/MC/PC48D	0.97	0.96	0.99
T*9(C,V)*C20	FC/MC/PC60D	0.96	0.94	1.00
T*9(C,V)*C20	FC/MC62D	0.97	0.97	1.01
T*9(C,V)*C20	FC/PC60C	0.96	0.94	1.00
T*9(C,V)*C20	FC64D	1.01	1.02	1.01
T*9(C,V)*C20	HD60	0.97	0.92	0.97
T*9(C,V)*C20	UC48C	0.97	0.96	0.99
T*9(C,V)*C20	UC60C	0.96	0.94	1.00
T*9(C,V)*D20	FC/MC/PC48D	0.97	0.96	0.99
T*9(C,V)*D20	FC/MC/PC60D	0.96	0.91	0.96
T*9(C,V)*D20	FC/MC62D	0.97	0.94	0.95
T*9(C,V)*D20	FC64D	1.01	1.02	0.99
T*9(C,V)*D20	HD60	0.98	0.97	1.00
T*9(C,V)*D20	UC48D	0.97	0.96	0.99
T*9(C,V)*D20	UC60D	0.96	0.94	1.00
T*9X*C16	FC/MC/PC48C	0.98	0.97	0.98
T*9X*C16	FC/MC/PC48D	0.98	0.97	0.98
T*9X*C16	FC/MC/PC60D	0.97	0.95	0.97
T*9X*C16	FC/MC62D	0.98	0.98	0.98
T*9X*C16	FC/PC60C	0.97	0.95	0.97
T*9X*C16	FC64D	1.01	0.99	0.94
T*9X*C16	HD60	0.98	0.97	0.96
T*9X*C16	UC48C	0.98	0.97	0.98
T*9X*C16	UC60C	0.96	0.95	0.98

Furnaces	Coils	T.C.	S.C.	KW
T*9X*C20	FC/MC/PC48C	0.98	0.97	0.96
T*9X*C20	FC/MC/PC48D	0.98	0.97	0.96
T*9X*C20	FC/MC/PC60D	0.97	0.95	0.97
T*9X*C20	FC/MC62D	0.98	0.98	0.96
T*9X*C20	FC/PC60C	0.97	0.95	0.97
T*9X*C20	FC64D	1.01	0.99	0.92
T*9X*C20	HD60	0.99	0.97	0.97
T*9X*C20	UC48C	0.98	0.97	0.96
T*9X*C20	UC60C	0.97	0.95	0.97
T*9X*D20	FC/MC/PC48D	0.98	0.97	0.98
T*9X*D20	FC/MC/PC60D	0.97	0.94	0.93
T*9X*D20	FC/MC62D	0.98	0.98	0.98
T*9X*D20	FC64D	1.01	0.99	0.92
T*9X*D20	HD60	0.98	0.97	0.96
T*9X*D20	UC48D	0.98	0.97	0.98
T*9X*D20	UC60D	0.96	0.94	0.92
Y*(8,L)C*C16	FC/MC/PC48C	0.97	0.95	1.01
Y*(8,L)C*C16	FC/MC/PC48D	0.97	0.95	1.01
Y*(8,L)C*C16	FC/MC/PC60D	0.95	0.91	0.95
Y*(8,L)C*C16	FC/MC62D	0.98	0.98	0.98
Y*(8,L)C*C16	FC/PC60C	0.96	0.94	1.00
Y*(8,L)C*C16	FC64D	1.01	1.02	0.99
Y*(8,L)C*C16	HD60	0.98	0.97	0.98
Y*(8,L)C*C16	UC48C	0.98	0.96	1.00
Y*(8,L)C*C16	UC60C	0.96	0.94	0.98
Y*(8,L)C*C20	FC/MC/PC48C	0.97	0.96	0.99
Y*(8,L)C*C20	FC/MC/PC48D	0.97	0.96	0.99
Y*(8,L)C*C20	FC/MC/PC60D	0.95	0.89	0.93
Y*(8,L)C*C20	FC/MC62D	0.98	0.98	0.98
Y*(8,L)C*C20	FC/PC60C	0.95	0.89	0.93
Y*(8,L)C*C20	FC64D	1.00	0.97	0.94
Y*(8,L)C*C20	HD60	0.98	0.97	0.96
Y*(8,L)C*C20	UC48C	0.98	0.96	1.00
Y*(8,L)C*C20	UC60C	0.96	0.95	0.96
Y*9C*C16	FC/MC/PC48C	0.97	0.96	0.99
Y*9C*C16	FC/MC/PC48D	0.97	0.96	0.99
Y*9C*C16	FC/MC/PC60D	0.96	0.94	1.00
Y*9C*C16	FC/MC62D	0.98	0.97	1.00
Y*9C*C16	FC/PC60C	0.96	0.94	1.00
Y*9C*C16	FC64D	1.01	1.02	0.99
Y*9C*C16	HD60	0.96	0.92	0.98
Y*9C*C16	UC48C	0.97	0.96	0.99
Y*9C*C16	UC60C	0.96	0.94	1.00
Y*9C*C20	FC/MC/PC48C	0.97	0.96	0.99
Y*9C*C20	FC/MC/PC48D	0.97	0.96	0.99
Y*9C*C20	FC/MC/PC60D	0.96	0.94	1.00
Y*9C*C20	FC/MC62D	0.97	0.97	1.01
Y*9C*C20	FC/PC60C	0.96	0.94	1.00
Y*9C*C20	FC64D	1.01	1.02	1.01
Y*9C*C20	HD60	0.97	0.92	0.97
Y*9C*C20	UC48C	0.97	0.96	0.99
Y*9C*C20	UC60C	0.96	0.94	1.00
Y*9C*D20	FC/MC/PC48D	0.97	0.96	0.99
Y*9C*D20	FC/MC/PC60D	0.96	0.91	0.96
Y*9C*D20	FC/MC62D	0.97	0.94	0.95
Y*9C*D20	FC64D	1.01	1.02	0.99
Y*9C*D20	HD60	0.98	0.97	1.00
Y*9C*D20	UC48D	0.97	0.96	0.99
Y*9C*D20	UC60D	0.96	0.94	1.00

COOLING PERFORMANCE DATA

OUTDOOR UNIT MODEL NO.		CZF06013(C)														
INDOOR COIL MODEL NO.		FC64														
CONDENSER ENTERING AIR TEMPERATURE	ID CFM	1500					1700					1900				
	ID DB (°F)	80	80	75	80	80	80	80	75	80	80	80	80	75	80	80
	ID WB (°F)	57	62	62	67	72	57	62	62	67	72	57	62	62	67	72
65	T.C.	54.9	58.0	53.0	59.0	63.9	56.8	58.9	54.4	60.1	66.6	58.6	59.7	55.7	61.3	69.3
	S.C.	52.0	45.1	39.2	37.3	30.2	53.5	48.2	41.0	39.5	31.8	55.1	51.2	42.7	41.8	33.5
	KW	3.02	3.04	3.03	3.06	3.09	3.11	3.12	3.11	3.14	3.18	3.20	3.21	3.19	3.22	3.26
75	T.C.	51.9	54.9	50.7	56.5	61.7	53.8	55.7	52.1	57.9	63.5	55.8	56.4	53.5	59.3	65.4
	S.C.	49.2	44.2	37.9	36.5	29.4	50.9	47.1	39.9	38.8	30.9	52.6	50.0	41.9	41.1	32.4
	KW	3.41	3.43	3.43	3.44	3.47	3.50	3.51	3.50	3.52	3.55	3.58	3.59	3.58	3.60	3.64
85	T.C.	48.8	51.7	48.4	54.0	59.4	50.8	52.4	49.8	55.7	60.5	52.9	53.1	51.2	57.4	61.6
	S.C.	46.4	43.3	36.7	35.8	28.6	48.3	46.0	38.9	38.1	30.0	50.2	48.7	41.1	40.4	31.4
	KW	3.80	3.82	3.82	3.82	3.84	3.88	3.90	3.90	3.90	3.92	3.96	3.97	3.97	3.98	4.01
95	T.C.	45.7	48.6	46.1	51.5	57.2	47.8	49.2	47.5	53.5	57.4	50.0	49.8	49.0	55.5	57.7
	S.C.	43.6	42.4	35.5	35.1	27.8	45.6	44.9	37.9	37.4	29.1	47.7	47.5	40.2	39.7	30.3
	KW	4.19	4.21	4.22	4.20	4.22	4.27	4.28	4.29	4.28	4.30	4.35	4.35	4.36	4.36	4.38
105	T.C.	43.8	44.8	43.5	48.9	54.7	45.7	45.4	44.9	50.5	55.3	47.5	46.1	46.4	52.2	55.9
	S.C.	41.7	40.1	33.7	33.8	26.4	43.5	42.0	36.2	36.0	27.7	45.3	44.0	38.6	38.2	29.0
	KW	4.84	4.87	4.89	4.85	4.85	4.91	4.92	4.96	4.92	4.93	4.97	4.98	5.02	4.99	5.00
115	T.C.	42.0	41.1	41.0	46.4	52.3	43.6	41.8	42.4	47.7	53.3	45.2	42.5	43.8	48.9	54.2
	S.C.	39.9	37.9	32.0	32.6	25.1	41.5	39.2	34.5	34.7	26.4	43.1	40.5	37.0	36.8	27.7
	KW	5.47	5.51	5.54	5.47	5.47	5.52	5.55	5.60	5.54	5.54	5.58	5.58	5.66	5.61	5.61
125	T.C.	40.2	37.4	38.5	43.9	49.9	41.5	38.1	39.9	44.8	51.2	42.8	38.9	41.3	45.7	52.5
	S.C.	38.1	35.7	30.3	31.4	23.8	39.5	36.4	32.8	33.4	25.1	40.8	37.1	35.3	35.4	26.4
	KW	6.10	6.15	6.20	6.10	6.08	6.14	6.17	6.25	6.16	6.15	6.18	6.19	6.30	6.22	6.21

NOTE: ALL CAPACITIES INCLUDE INDOOR FAN HEAT. KW VALUES ARE FOR THE SYSTEM (OUTDOOR + INDOOR).

Multipliers for determining the performance with other indoor sections.

NOTE: For dry bulb temperatures different than those listed (between 73-87 °F), sensible capacity increases by 1060 BTUH per 1000 CFM per degree above the listed temperature and decreases by 1060 BTUH per 1000 CFM per degree below the listed temperature.

Air Handlers	Coils	T.C.	S.C.	KW
–	FC64	1.00	1.00	1.00
AHE60D	–	1.00	1.02	0.96
AHR60D	–	0.97	0.97	1.01
AHV60D	–	0.96	0.97	0.96
AV*60	–	0.98	0.97	0.96
MV20D	FC/MC60D	0.99	1.00	0.97
MV20D	FC/MC62D	1.00	1.02	0.98
MV20D	FC64D	1.02	1.04	0.94
MX20D	FC/MC60D	0.99	1.00	0.95
MX20D	FC/MC62D	1.01	1.03	0.95
MX20D	FC64D	1.03	1.07	0.95

Furnaces	Coils	T.C.	S.C.	KW
T*(8,L)C*C20	FC/MC62D	0.98	0.98	0.98
T*(8,L)C*C20	FC64D	1.02	1.04	1.00
T*(8,L)V*C20	FC/MC62D	0.98	0.98	0.98
T*(8,L)V*C20	FC64D	1.02	1.04	1.00
T*(8,L)X*C20	FC/MC/PC60D	0.97	0.97	0.93
T*(8,L)X*C20	FC/MC62D	0.99	0.99	0.93
T*(8,L)X*C20	FC/PC60C	0.97	0.94	0.95
T*(8,L)X*C20	FC64D	1.02	1.03	0.96
T*9(C,V)*C20	FC/MC62D	0.98	0.98	0.98
T*9(C,V)*C20	FC64D	1.01	1.01	0.99
T*9(C,V)*D20	FC/MC62D	0.98	0.98	0.96
T*9(C,V)*D20	FC64D	1.01	1.01	0.99
T*9X*C20	FC/MC/PC60D	0.97	0.95	0.95
T*9X*C20	FC/MC62D	0.99	0.99	0.95
T*9X*C20	FC/PC60C	0.97	0.95	0.95
T*9X*D20	FC/MC/PC60D	0.98	0.98	0.94
T*9X*D20	FC/MC62D	0.99	0.98	0.95
T*9X*D20	FC64D	1.01	1.02	0.95
Y*(8,L)C*C20	FC/MC62D	0.98	0.98	0.98
Y*(8,L)C*C20	FC64D	1.02	1.04	1.00
Y*9C*C20	FC/MC62D	0.98	0.98	0.98
Y*9C*C20	FC64D	1.01	1.01	0.99
Y*9C*D20	FC/MC62D	0.98	0.98	0.96
Y*9C*D20	FC64D	1.01	1.01	0.99

NOTES

Subject to change without notice. Published in U.S.A.
Copyright © 2012 by Johnson Controls, Inc. All rights reserved.

567175-YTG-F-0812
Supersedes: 567175-YTG-E-0512

York International Corp.
5005 York Drive
Norman, OK 73069