YORK®
Heating and Air Conditioning

TECHNICAL GUIDE

SPLIT-SYSTEM HEAT PUMPS

13 SEER – R-410A – Single Phase

MODELS:
YHJD18 THRU 60
(1.5 THRU 5 NOMINAL TONS)

AHRI CERTIFIED™ www.ahridirectory.org
Unitary Small HP
AHRI Standard 210/240
Certification applies only when the complete system is listed with AHRI.

ISO 9000 REGISTRATION
ISO 9001
Certified Quality
Management System

C SA US ®

LIMITED WARRANTY TO CONSUMERS Good Housekeeping Promises REPLACEMENT OR REFUND IF DEFECTIVE

Due to continuous product improvement, specifications are subject to change without notice.

Visit us on the web at
www.upgnet.com and www.york.com

Additional rating information can be found at
www.ahridirectory.org

WARRANTY

Standard 5-year limited parts warranty.
10-year limited compressor warranty.

Extended 10-year limited parts warranty when product is registered online within 90 days of purchase for replacement or closing for new home construction.

DESCRIPTION

The 13 SEER Series unit is the outdoor part of a versatile climate system. It is designed with a matching indoor coil component from Johnson Controls Unitary Products. Available for typical applications this climate system is supported with accessories and documents to serve specific functions.

FEATURES

- **Quality Condenser Coils -** The coil is constructed of copper tubing and enhanced aluminum fins for increased efficiency and corrosion protection.
- **Protected Compressor -** The compressor is internally protected against high pressure, temperature, and externally by a factory installed high pressure switch. This is accomplished by the simultaneous operation of high pressure relief valve and a temperature sensor which protects the compressor if undesirable operating conditions occur. A liquid line filter-drier further protects the compressor.
- **Durable Finish -** The cabinet is made of pre-painted steel. The pre-treated galvanized steel provides a better paint-to-steel bond, which resists corrosion and rust creep. Special primer formulas and matted-textured finish insure less fading when exposed to sunlight.
- **Lower Installed Cost -** Installation time and costs are reduced by easy power and control wiring connections. Available in sweat connect models only. The unit contains enough refrigerant for matching indoor coils and 15 feet of interconnecting piping. The small base dimension means less space is required on the ground or roof.
- **Top Discharge -** The warm air from the top mounted fan is blown up, away from the structure and any landscaping. This allows compact location on multi-unit applications.
- **Low Operating Sound Level -** The upward air flow carries the normal operating noise away from the living area. The rigid top panel effectively isolates any motor sound. Isolator mounted compressor and the rippled fins of the condenser coil muffle the normal fan motor and compressor operating sounds.
- **Low Maintenance -** Long life permanently lubricated motor-bearings need no annual servicing.
- **Easy Service Access -** Fully exposed refrigerant connections and a single panel covering the electrical controls make for easy servicing of the unit.
- **Secured Service Valves -** Secured, re-usable service valves are provided on both the liquid and vapor sweat connections for ease of evacuating and charging.
- **Agency Listed -** U.L. and C.U.L. listed - approved for outdoor application. The unit is certified in accordance with the Unitary Small Equipment certification program, which is based on AHRI Standard 210/240.

Physical and Electrical Data

MODEL		YHJD18 S41S2	YHJD24 S41S4	YHJD30 S41S4	YHJD36 S41S4	YHJD42 S41S4	YHJD48 S41S4	YHJD60 S41S4
Unit Supply Voltage		208-230V, 1ϕ, 60Hz						
Normal Voltage Range [1]		187 to 252						
Minimum Circuit Ampacity		11.9	11.2	14.1	19.7	20.9	25.6	34.9
Max. Overcurrent Device Amps [2]		20	15	20	30	35	45	60
Min. Overcurrent Device Amps [3]		15	15	15	20	25	30	35
Compressor Type		Scroll	Recip	Recip	Recip	Recip	Recip	Scroll
Compressor Amps	Rated Load	9.0	8.3	10.6	14.7	15.7	19.4	26.9
	Locked Rotor	48.0	43.0	54.0	74.0	88.0	88.0	135.0
Crankcase Heater		No	Yes	Yes	Yes	Yes	Yes	No
Factory External Discharge Muffler		Yes	No	No	No	No	No	Yes
Factory External Check Valve		No	No	No	No	No	No	No
HS Kit Required with TXV [4]		No	Yes	Yes	Yes	Yes	Yes*	No
Fan Motor Amps	Rated Load	0.70	0.80	0.80	1.3	1.3	1.3	1.3
Fan Diameter Inches		24	24	24	24	24	24	24
Fan Motor	Rated HP	1/10	1/8	1/8	1/4	1/4	1/4	1/4
	Nominal RPM	825	1075	1075	850	850	850	850
	Nominal CFM	2000	2900	3000	3800	3800	3600	3600
Coil	Face Area Sq. Ft.	15.7	18.3	21.0	23.6	23.6	23.6	23.6
	Rows Deep	1	1	1	1	1	2	2
	Fin / Inches	22	22	22	22	22	18	18
Liquid Line Set OD (Field Installed)		3/8	3/8	3/8	3/8	3/8	3/8	3/8
Vapor Line Set OD (Field Installed)		3/4	3/4	3/4	3/4	7/8	7/8	7/8
Unit Charge (Lbs. - Oz.) [5]		6 - 6	9 - 6	9 - 0	10 - 0	9 - 10	14 - 12	13 - 13
Charge Per Foot, Oz.		0.62	0.62	0.62	0.62	0.67	0.67	0.67
Operating Weight Lbs.		172	194	206	218	218	285	284

* These models are shipped with a Hard Start Kit installed at the factory.

1. Rated in accordance with ANSI/AHRI Standard 110-2002, utilization range “A”.
2. Dual element fuses or HACR circuit breaker. Maximum allowable overcurrent protection.
3. Dual element fuses or HACR circuit breaker. Minimum recommended overcurrent protection.
4. See Hard Start Kit Accessory Installation Manual for Hard Start Kit part number for each model.
5. The Unit Charge is correct for the outdoor unit, matched indoor coil, and 15 feet of refrigerant tubing. For tubing lengths other than 15 feet, add or subtract the amount of refrigerant, using the difference in length multiplied by the per foot value.

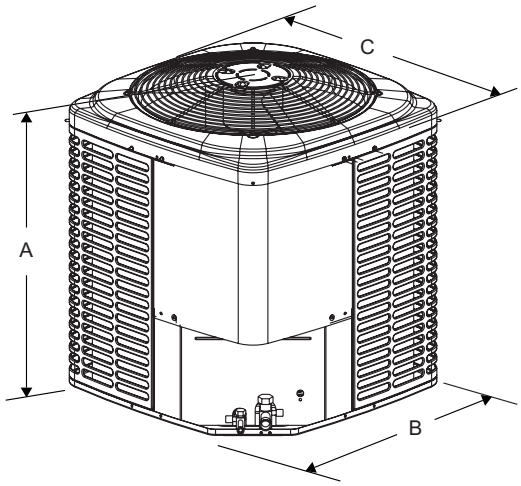

All dimensions are in inches. They are subject to change without notice. Certified dimensions will be provided upon request.

Unit Model	Dimensions (Inches)			Refrigerant Connection Service Valve Size	
	A[1]	B	C	Liquid	Vapor
18	28	34	34	3/8”	3/4”
24	32	34	34		
30	36	34	34		
36	40	34	34		
42	40	34	34		7/8”
48	40	34	34		
60	40	34	34		

1. Including Fan Guard.

System Charge for Various Matched Systems							
Outdoor Unit	YHJD18S41S2	YHJD24S41S4	YHJD30S41S4	YHJD36S41S4	YHJD42S41S4	YHJD48S41S4	YHJD60S41S4
Required Orifice or TXV [1]	.051/4F1	.054/4G1	.063/4G1	.071/4H1	.075/4H1	4J1	4K1
Factory Charge, lbs-oz	6 - 6	9 - 6	9 - 0	10 - 0	9 - 10	14 - 2	13 - 13
Indoor Coil[2,3,4]	**Additional Charge, Oz**						
AHE18B	.051/ TXV + 0	–	–	–	–	–	–
AHE24B	–	.054 / TXV + 0	–	–	–	–	–
AHE30B	–	.054 / TXV + 0	.063 / TXV + 0	–	–	–	–
AHE36C	–	–	.063 / TXV + 25	.071 / TXV + 6	–	–	–
AHE42D	–	–	–	.071 / TXV + 16	–	–	–
AHE48D	–	–	–	–	.075 / TXV + 0	TXV + 0	–
AHE60D	–	–	–	–	–	TXV + 25	TXV + 0
AHP18	.051/ TXV + 0	–	–	–	–	–	–
AHP24	.051/ TXV + 0	–	–	–	–	–	–
AHP30	–	.059 / TXV + 0	.063 / TXV + 0	–	–	–	–
AHP36	–	–	.063 / TXV + 25	.071 / TXV + 6	–	–	–
AHP42	–	–	–	.071 / TXV + 6	–	–	–
AHP48	–	–	–	–	.075 / TXV + 0	TXV + 0	–
AHP60	–	–	–	–	.075 / TXV + 0	TXV + 0	–
AHR18B	.051/ TXV + 0	–	–	–	–	–	–
AHR24B	–	.054 / TXV + 0	–	–	–	–	–
AHR30B	–	.054 / TXV + 0	.063 / TXV + 0	–	–	–	–
AHR36B	–	–	.063 / TXV + 25	.071 / TXV + 6	–	–	–
AHR42C	–	–	–	.071 / TXV + 16	–	–	–
AHR48D	–	–	–	–	.075 / TXV + 0	TXV + 0	–
AHR60D	–	–	–	–	–	TXV + 25	–
AHX18	.051/ TXV + 0	–	–	–	–	–	–
AHX30	–	.059 / TXV + 0	.063 / TXV + 0	–	–	–	–
AHX36	–	.059 / TXV + 23	.063 / TXV + 25	.071 / TXV + 6	–	–	–
AHX42	–	–	–	.071 / TXV + 16	.075 / TXV + 0	–	–
AHX48	–	–	–	–	.075 / TXV + 0	TXV + 0	–
AHX60	–	–	–	–	–	TXV + 25	TXV + 0
AV*24	.051/ TXV + 5	–	–	–	–	–	–
AV*36	–	.059 / TXV + 23	.063 / TXV + 25	.071 / TXV + 6	–	–	–
AV*48	–	–	–	–	.075 / TXV + 0	TXV + 0	–
AV*60	–	–	–	–	.075 / TXV + 0	TXV + 0	–
FC/MC/PC/UC18	.051/ TXV + 0	–	–	–	–	–	–
FC/MC/PC/UC24	.051/ TXV + 7	–	–	–	–	–	–
FC/MC/PC/UC30	.051/ TXV + 7	–	–	–	–	–	–
FC/MC/PC/UC32	–	.059 / TXV + 0	.063 / TXV + 0	–	–	–	–
FC/MC/PC/UC35	–	.059 / TXV + 0	.063 / TXV + 0	–	–	–	–
FC/MC/PC/UC37	–	.059 / TXV + 23	.063 / TXV + 25	.071 / TXV + 6	–	–	–
FC/MC/PC/UC43	–	.059 / TXV + 23	.063 / TXV + 25	.071 / TXV + 6	–	–	–
FC/MC/PC/UC48	–	–	–	.071 / TXV + 16	.075 / TXV + 0	–	–
FC/MC/PC/UC60	–	–	–	–	.075 / TXV + 0	TXV + 0	–
FC/MC62	–	–	–	–	–	TXV + 25	TXV + 0
FC64	–	–	–	–	–	–	TXV + 42
F4FP024	.051/ TXV + 5	–	–	–	–	–	–
F4FP040	–	.059 / TXV + 0	.063 / TXV + 0	–	–	–	–
F4FP045	–	–	–	–	.075 / TXV + 0	–	–
F4FV060	–	–	–	–	.075 / TXV + 0	TXV + 0	–
F5FP048	–	–	–	.071 / TXV + 16	–	–	–
F5FP060	–	–	–	–	.075 / TXV + 0	TXV + 0	–
F6FP018	.051/ TXV + 0	–	–	–	–	–	–

For Notes See Page 4.

System Charge for Various Matched Systems (Continued)							
Outdoor Unit	YHJD18S41S2	YHJD24S41S4	YHJD30S41S4	YHJD36S41S4	YHJD42S41S4	YHJD48S41S4	YHJD60S41S4
Required Orifice or TXV [1]	.051/4F1	.054/4G1	.063/4G1	.071/4H1	.075/4H1	4J1	4K1
Factory Charge, lbs-oz	6 - 6	9 - 6	9 - 0	10 - 0	9 - 10	14 - 2	13 - 13
Indoor Coil[2,3,4]	**Additional Charge, Oz**						
F6FP024	.051/ TXV + 5	–	–	–	–	–	–
F6FP030	–	.059 / TXV + 0	.063 / TXV + 0	–	–	–	–
F6FP036	–	.059 / TXV + 0	.063 / TXV + 0	–	–	–	–
F6FP042	–	–	–	.071 / TXV + 16	–	–	–
F6FP048	–	–	–	–	.075 / TXV + 0	TXV + 0	–
F6FP060	–	–	–	–	–	TXV + 25	TXV + 0
HD24	.051/ TXV + 0	–	–	–	–	–	–
HD48	–	–	–	.071 / TXV + 16	–	–	–
HD60	–	–	–	–	.075 / TXV + 0	–	–
Some of the combinations shown in the above System Charge table require Advanced Main Air Circulating Fan indoor product. For approved coil only matches, please see the “COOLING CAPACITY - Upflow, Downflow & Horizontal Furnaces and Coils” table.							

FOOTNOTES:

1. For applications requiring a TXV use S1-1TVM*** series kit.
2. Systems matched with furnace or air handlers not equipped with blower-off delays may require blower Time Delay Kit S1-2FD06700224.
3. PC coils cannot be used in downflow or horizontal applications. FC coils cannot be used in horizontal applications.
4. Refer to Cooling and Heating Performance Data tables for actual performance for specified system matches.

PROCEDURES:

1. Unit factory charge listed on the unit nameplate includes refrigerant for the condenser, the smallest evaporator, and 15 feet of interconnecting line tubing.
2. Verify the TXV and additional charge required for specific evaporator coil in the system using the above table.
3. Additional charge for the amount of interconnecting line tubing greater than 15 feet at the rate specified in Physical and Electrical Data Table.
4. For TXV matches requiring additional charge, the refrigerant needs to be weighed in for specific coil match and lineset length.
5. Permanently mark the unit nameplate with the total system charge. Total System Charge = Base Charge (as shipped) + charge adder for evaporator + charge adder for line set.

COOLING CAPACITY - With Air Handler Coils

UNIT MODEL	AIR HANDLER		COIL MODEL[1]	COOLING				
	MODEL	WIDTH		RATED CFM	NET MBH		SEER	EER
					TOTAL	SENS.		
13 SEER AC WITH AIR HANDLERS								
YHJD18S41S2	AHE18B	17	–	610	18.0	14.6	14.00	12.00
	AHP18	17	–	600	18.0	14.0	13.00	11.00
	AHP24	17	–	600	18.0	14.0	13.00	11.00
	AHR18B	17	–	665	18.0	14.9	13.00	11.00
	AHX18	17	–	600	18.0	14.0	14.50	12.00
	AV*24	17	–	550	18.0	13.7	14.00	12.00
	F4FP024	17	–	600	18.0	14.0	13.00	11.00
	F6FP018	17	–	600	18.0	14.0	14.50	12.00
	F6FP024	17	–	610	18.0	14.0	14.50	12.00
	MV12B	17	FC/MC18B	600	18.0	13.7	14.00	12.00
	MV12B	17	FC/MC24B	600	18.0	13.7	14.00	12.00
	MX12B	17	FC/MC18B	585	18.0	14.5	14.50	12.00
	MX12B	17	FC/MC24B	645	18.0	15.0	14.50	12.00
	MX12B	17	FC/MC30B	645	18.0	15.0	14.50	12.00
YHJD24S41S4	AHE24B	17	–	795	24.0	17.4	14.50	12.00
	AHE30B	17	–	795	24.0	17.4	14.50	12.00
	AHP30	17	–	800	23.8	17.1	13.00	11.00
	AHR24B	17	–	740	24.0	16.9	13.00	11.00
	AHR30B	17	–	740	24.0	16.9	13.00	11.00
	AHX30	17	–	820	24.0	17.5	14.00	12.00
	AHX36	21	–	820	24.0	17.5	14.00	12.00
	AV*36	21	–	725	24.0	17.0	14.50	12.00

For Notes See Page 6.

COOLING CAPACITY - With Air Handler Coils (Continued)

UNIT MODEL	AIR HANDLER		COIL MODEL[1]	COOLING				
	MODEL	WIDTH		RATED CFM	NET MBH		SEER	EER
					TOTAL	SENS.		
13 SEER AC WITH AIR HANDLERS								
YHJD24S41S4	F4FP040	21	–	800	23.8	17.1	13.00	11.00
	F6FP030	17	–	850	24.0	17.6	14.00	12.00
	F6FP036	21	–	855	24.0	17.6	14.00	12.00
	MV12B	17	FC/MC35B	800	24.0	17.5	14.50	12.00
	MV12B	17	FC/MC43B	800	24.0	17.3	14.50	12.00
	MX12B	17	FC/MC35B	815	24.0	17.6	14.50	12.00
	MX12B	17	FC/MC43B	735	24.0	17.1	14.50	12.00
YHJD30S41S4	AHE30B	17	–	985	29.2	21.0	14.00	12.00
	AHE36C	21	–	1000	29.8	21.8	14.00	12.00
	AHP30	17	–	1000	30.0	22.2	13.00	11.00
	AHP36	21	–	1000	30.0	22.2	13.00	11.00
	AHR30B	17	–	1090	29.2	21.8	13.00	11.00
	AHR36B	17	–	1060	29.6	21.6	13.00	11.00
	AHX30	17	–	1025	30.0	22.6	14.50	12.00
	AHX36	21	–	1005	30.0	22.4	14.50	12.00
	AV*36	21	–	960	30.0	22.4	14.50	12.00
	F4FP040	21	–	1000	29.8	21.8	13.00	11.00
	F6FP030	17	–	1035	30.0	22.0	14.00	11.50
	F6FP036	21	–	980	30.0	22.0	14.50	12.00
	MV12B	17	FC/MC35B	1010	30.0	22.0	14.50	12.00
	MV16C	21	FC/MC35C	1070	30.0	23.0	14.50	12.00
	MV12B	17	FC/MC43B	1000	30.0	22.2	14.50	12.00
	MV16C	21	FC/MC43C	1000	30.0	22.2	14.50	12.00
	MX12B	17	FC/MC35B	1085	29.6	22.2	14.00	12.00
	MX16C	21	FC/MC35C	1035	29.6	22.2	14.00	12.00
	MX12B	17	FC/MC43B	1095	29.6	22.6	14.00	12.00
	MX16C	21	FC/MC43C	970	29.6	21.6	14.00	12.00
YHJD36S41S4	AHE36C	21	–	1190	35.6	25.7	14.50	12.00
	AHE42D	21	–	1180	35.6	25.6	14.50	12.00
	AHP36	21	–	1200	36.0	26.4	13.00	11.00
	AHP42	21	–	1255	36.0	27.2	13.00	11.00
	AHR36B	21	–	1245	35.6	26.1	13.00	11.00
	AHR42C	21	–	1230	35.6	25.8	13.00	11.00
	AHX36	21	–	1225	36.0	26.8	14.50	12.00
	AHX42	21	–	1190	36.0	26.8	14.50	12.00
	AV*36	21	–	1190	36.0	26.8	14.50	12.00
	F5FP048	24	–	1235	36.0	27.2	14.50	12.00
	F6FP042	24	–	1290	36.0	27.6	14.50	12.00
	MV12B	17	FC/MC43B	1225	36.0	27.2	14.50	12.00
	MV16C	21	FC/MC43C	1200	36.0	26.8	14.50	12.00
	MV12D	24	FC/MC48D	1160	36.0	26.6	14.50	12.00
	MV16C	21	FC/MC48C	1200	36.0	26.6	14.50	12.00
	MX12B	17	FC/MC43B	1220	35.6	26.0	14.00	12.00
	MX16C	21	FC/MC43C	1140	35.6	25.5	14.00	12.00
	MX12D	24	FC/MC48D	1225	35.6	25.7	14.50	12.00
	MX16C	21	FC/MC48C	1150	35.6	25.6	14.00	12.00
YHJD42S41S4	AHE48D	24	–	1380	40.5	33.2	14.00	12.00
	AHP48	24	–	1370	41.0	31.0	13.00	11.00
	AHP60	24	–	1400	42.0	32.4	14.00	12.00
	AHR48D	24	–	1320	39.5	29.6	13.00	11.00

For Notes See Page 6.

COOLING CAPACITY - With Air Handler Coils (Continued)

UNIT MODEL	AIR HANDLER		COIL MODEL[1]	COOLING				
	MODEL	WIDTH		RATED CFM	NET MBH		SEER	EER
					TOTAL	SENS.		
13 SEER AC WITH AIR HANDLERS								
YHJD42S41S4	AHX42	21	–	1395	40.5	32.4	14.00	12.00
	AHX48	24	–	1445	42.0	33.0	14.50	12.00
	AV*48	24	–	1385	42.0	32.6	14.50	12.00
	AV*60	24	–	1360	42.0	32.6	14.50	12.00
	F4FP045	24	–	1400	41.0	31.8	13.00	11.00
	F5FP060	24	–	1485	42.0	33.2	14.00	12.00
	F6FP048	24	–	1380	42.0	32.4	14.50	12.00
	F4FV060	24	–	1350	40.5	32.2	14.00	12.00
	MV16C	21	FC/MC48C	1400	40.0	32.0	13.50	11.50
	MV20D	24	FC/MC48D	1440	40.5	32.8	14.00	12.00
	MV16C	21	FC60C	1400	41.5	32.4	14.00	12.00
	MV20D	24	FC/MC60D	1400	42.0	32.4	14.00	12.00
	MX16C	21	FC/MC48C	1390	41.0	31.4	14.50	12.00
	MX20D	24	FC/MC48D	1415	41.0	31.4	14.00	12.00
	MX16C	21	FC60C	1420	41.5	32.2	14.50	12.00
	MX20D	24	FC/MC60D	1470	41.5	32.2	14.50	12.00
YHJD48S41S4	AHE48D	24	–	1635	44.0	33.2	14.00	12.00
	AHE60D	24	–	1565	45.0	35.4	14.5	12.00
	AHP48	24	–	1685	45.0	34.6	13.00	11.00
	AHP60	24	–	1600	44.5	34.0	14.50	12.00
	AHR48D	24	–	1610	43.5	32.8	13.00	11.00
	AHR60D	24	–	1620	44.5	34.0	13.00	11.00
	AHX48	24	–	1660	45.5	35.0	14.50	12.00
	AHX60	24	–	1570	45.5	34.4	14.50	12.00
	AV*48	24	–	1625	45.0	34.4	14.50	12.00
	AV*60	24	–	1560	45.0	34.6	14.50	12.00
	F5FP060	24	–	1665	44.5	34.2	14.50	12.00
	F6FP048	24	–	1625	45.0	34.4	14.50	12.00
	F6FP060	24	–	1570	45.5	34.4	14.50	12.00
	F4FV060	24	–	1665	44.5	34.2	14.50	12.00
	MV16C	21	FC60C	1600	44.0	33.4	14.00	11.50
	MV20D	24	FC/MC60D	1600	44.5	33.8	14.50	12.00
	MV20D	24	FC/MC62D	1630	45.5	34.4	14.50	12.00
	MX16C	21	FC60C	1630	45.5	34.6	14.50	12.00
	MX20D	24	FC/MC60D	1585	45.5	34.6	14.50	12.00
	MX20D	24	FC/MC62D	1605	45.0	34.4	14.50	12.00
YHJD60S41S4	AHE60D	24	–	1835	55.0	40.0	14.00	11.85
	AHX60	24	–	1830	55.0	40.5	14.00	11.50
	F6FP060	24	–	1875	56.0	41.5	14.00	12.00
	MV20D	24	FC/MC62D	1855	55.5	40.5	13.75	11.50
	MV20D	24	FC64D	1855	56.0	41.5	14.00	12.00
	MX20D	24	FC/MC62D	1795	55.0	40.0	14.00	12.00
	MX20D	24	FC64D	1795	56.0	41.5	14.50	12.00

Rated in accordance with DOE test procedures (Federal Register 12-27-79 and 3-18-88) and AHRI Standards 210/240.
Cooling MBH based on 80 °F entering air temperature, 50% RH (Relative Humidity), and rated air flow.
EER (Energy Efficiency Ratio) is the total cooling output in BTUs at 95 °F outdoor ambient divided by the total electric power in watt-hours at those conditions.
SEER (Seasonal Energy Efficiency Ratio) is the total cooling output in BTUs during a normal annual usage period for cooling divided by the total electric power input in watt-hours during the same period.

1. MC coils available with a factory installed horizontal drain pan. See price pages for specific model number.

— = Not applicable.

MA Modular Air Handlers use Coil Only Ratings.

COOLING CAPACITY - Upflow, Downflow & Horizontal Furnaces and Coils (Coil Only Ratings)

UNIT MODEL	FURNACE**		COIL MODEL	COOLING				
	CFM RANGE (Min.-max.)	WIDTH		RATED CFM	NET MBH		SEER[1]	EER
					TOTAL	SENS.		
YHJD18S41S2	450 - 750	14,17	FC/MC/PC18	600	18.0	14.0	13.00	11.00
	450 - 750	14,17	FC/MC/PC24	600	18.0	14.0	13.50	11.00
	450 - 750	14	HD24	600	18.0	14.0	13.50	11.00
YHJD24S41S4	600 - 1000	14	FC/MC/PC32	800	23.8	17.1	13.00	11.00
	600 - 1000	17,21	FC/MC/PC35	800	23.6	17.1	13.00	11.00
	600 - 1000	14	FC/MC/PC37	800	24.0	17.3	13.00	11.00
	600 - 1000	17,21	FC/MC/PC43	800	24.0	17.3	13.00	11.00
YHJD30S41S4	800 - 1200	14	FC/MC/PC32	1000	29.8	21.8	13.00	11.00
	800 - 1200	17,21	FC/MC/PC35	1000	29.8	21.8	13.00	11.00
	800 - 1200	14	FC/MC/PC37	1000	30.0	22.2	13.00	11.00
	800 - 1200	17,21	FC/MC/PC43	1000	30.0	22.2	13.00	11.00
YHJD36S41S4	1000 - 1400	17,21	FC/MC/PC43	1200	36.0	26.6	13.00	11.00
	1000 - 1400	14	FC/MC/PC37	1200	36.0	26.8	13.00	11.00
	1000 - 1400	–	HD48	1200	36.0	26.4	13.00	11.00
	1000 - 1400	21,24	FC/MC/PC48	1200	36.0	26.6	13.00	11.00
	1000 - 1400	21,24	UC48	1200	36.0	26.8	13.00	11.00
YHJD42S41S4	1200 - 1600	21,24	FC/MC/PC60	1400	41.0	31.8	13.00	11.00
	1200 - 1600	–	HD60	1400	41.0	31.4	13.00	11.00
	1200 - 1600	21,24	UC60	1400	40.5	31.0	13.00	11.00
YHJD48S41S4	1400 - 1800	21,24	FC/MC/PC60	1600	44.0	33.4	13.00	11.00
	1400 - 1800	24	FC/MC62	1600	44.5	33.8	13.00	11.00
	1400 - 1800	21,24	UC60	1600	44.0	32.8	13.00	11.00
YHJD60S41S4	1600 - 2000	24	FC/MC62	1800	55.0	40.0	13.00	11.00
	1600 - 2000	24	FC64	1800	56.0	41.5	13.00	11.00

1. Requires a S1-2FD06700224 Blower Time Delay unless a standard furnace is equipped with one.
MA Modular Air Handlers use Coil Only Ratings.
PSC furnaces, such as the TG8S, TGLS, and TG9S, use Coil Only Ratings.

COOLING CAPACITY - With High Efficiency Motor Furnaces

UNIT MODEL	FURNACE MODEL	COIL MODEL[1]	WIDTH	COOLING				
				RATED CFM	Net MBH		SEER	EER
					TOTAL	SENS.		
13 SEER HP WITH HIGH EFFICIENCY MOTOR FURNACES[2]								
YHJD18S41S2	T*(8,L)X*A12	FC/MC/PC18A	14	540	18.0	14.3	14.00	12.00
	T*(8,L)X*B12	FC/MC/PC18B	17	580	18.0	14.6	14.00	12.00
	T*9X*B12	FC/MC/PC18B	17	590	18.0	14.7	14.00	12.00
	T*(8,L)X*A12	FC/MC/PC24A	14	595	18.0	14.9	14.00	12.00
	T*(8,L)X*B12	FC/MC/PC24B	17	620	18.0	14.9	14.00	12.00
	T*9X*B12	FC/MC/PC24B	17	615	18.0	14.9	14.00	12.00
	T*(8,L)X*A12	FC/MC/PC30A	14	595	18.0	14.9	14.00	12.00
	T*(8,L)X*B12	FC/MC/PC30B	17	620	18.0	14.9	14.00	12.00
	T*9X*B12	FC/MC/PC30B	17	615	18.0	14.9	14.00	12.00
	(Y*LC/T*8V/T*LV)*A12	FC/MC/PC18A	14	620	18.0	12.3	14.50	12.30
	(Y*LC/T*8V/T*LV)*B12	FC/MC/PC18B	17	580	18.0	11.9	14.40	12.20
	(Y*9C/T*9V)*B12	FC/MC/PC18B	17	610	18.0	12.2	14.60	12.40
	(Y*LC/T*8V/T*LV)*A12	FC/MC/PC24A	14	640	18.0	12.7	14.80	12.50
	(Y*LC/T*8V/T*LV)*B12	FC/MC/PC24B	17	575	18.0	12.2	14.90	12.60
	(Y*9C/T*9V)*B12	FC/MC/PC24B	17	610	18.0	12.7	14.90	12.60
	(Y*LC/T*8V/T*LV)*A12	FC/MC/PC30A	14	640	18.0	12.7	14.80	12.50
	(Y*LC/T*8V/T*LV)*B12	FC/MC/PC30B	17	575	18.0	12.2	14.90	12.60
	(Y*9C/T*9V)*B12	FC/MC/PC30B	17	610	18.0	12.7	14.90	12.60
	(Y*LC/T*8V/T*LV)*A12	HD24	14	640	18.0	12.6	14.90	12.60
	(Y*LC/T*8V/T*LV)*B12	HD24	17	575	18.0	12.2	14.90	12.60
	(Y*9C/T*9V)*B12	HD24	17	610	18.0	12.6	15.00	12.70
	(Y*LC/T*8V/T*LV)*A12	UC18A	14	620	18.0	12.4	14.60	12.30
	(Y*LC/T*8V/T*LV)*B12	UC18B	17	580	18.0	12.0	14.60	12.30
	(Y*9C/T*9V)*B12	UC18B	17	610	18.0	12.3	14.80	12.40
	(Y*LC/T*8V/T*LV)*A12	UC24A	14	640	18.0	12.8	14.80	12.50
	(Y*LC/T*8V/T*LV)*B12	UC24B	17	575	18.0	12.3	14.90	12.60
	(Y*9C/T*9V)*B12	UC24B	17	610	18.0	12.8	14.90	12.60
	(Y*LC/T*8V/T*LV)*A12	UC30A	14	640	18.0	12.8	14.80	12.50
	(Y*LC/T*8V/T*LV)*B12	UC30B	17	575	18.0	12.3	15.00	12.60
	(Y*9C/T*9V)*B12	UC30B	17	610	18.0	12.8	15.00	12.60
YHJD24S41S4	T*(8,L)X*A12	FC/MC/PC32A	14	800	24.0	17.5	14.50	12.00
	T*(8,L)X*B12	FC/MC/PC35B	17	850	24.0	17.6	14.50	12.00
	T*(8,L)X*C16	FC/MC/PC35C	21	865	24.0	17.6	14.50	12.00
	T*(8,L)X*C20	FC/MC/PC35C	21	885	24.0	17.6	14.50	12.00
	T*9X*B12	FC/MC/PC35B	17	785	24.0	17.4	14.50	12.00
	T*9X*C16	FC/MC/PC35C	21	765	24.0	17.3	14.50	12.00
	T*9X*C20	FC/MC/PC35C	21	825	24.0	17.6	14.50	12.00
	T*(8,L)X*A12	FC/MC/PC37A	14	840	24.0	17.8	14.50	12.00
	T*(8,L)X*B12	FC/MC/PC43B	17	865	24.0	18.0	14.50	12.00
	T*(8,L)X*C16	FC/MC/PC43C	21	855	24.0	17.9	14.50	12.00
	T*(8,L)X*C20	FC/MC/PC43C	21	815	24.0	17.3	14.50	12.00
	T*9X*B12	FC/MC/PC43B	17	800	24.0	17.3	14.50	12.00
	T*9X*C16	FC/MC/PC43C	21	785	24.0	17.3	14.50	12.00
	T*9X*C20	FC/MC/PC43C	21	790	24.0	17.3	14.50	12.00
	(Y*LC/T*8V/T*LV)*A12	FC/MC/PC32A	14	775	24.0	17.2	14.00	12.00
	(Y*LC/T*8V/T*LV)*B12	FC/MC/PC35B	17	760	24.0	17.2	14.00	12.00
	(Y*LC/T*8V/T*LV)*C16	FC/MC/PC35C	21	855	24.0	17.6	14.50	12.00
	(Y*LC/T*8V/T*LV)*C20	FC/MC/PC35C	21	740	24.0	17.0	14.50	12.00
	(Y*9C/T*9V)*B12	FC/MC/PC35B	17	815	24.0	17.6	14.00	12.00
	(Y*9C/T*9V)*C16	FC/MC/PC35C	21	900	24.0	18.1	14.50	12.00

For Notes See Page 11.

COOLING CAPACITY - With High Efficiency Motor Furnaces (Continued)

UNIT MODEL	FURNACE MODEL	COIL MODEL[1]	WIDTH	COOLING				
				RATED CFM	Net MBH		SEER	EER
					TOTAL	SENS.		
13 SEER HP WITH HIGH EFFICIENCY MOTOR FURNACES[2]								
YHJD24S41S4	(Y*9C/T*9V)*C20	FC/MC/PC35C	21	755	24.0	17.2	14.50	12.00
	(Y*LC/T*8V/T*LV)*A12	FC/MC/PC37A	14	805	24.0	17.3	14.50	12.00
	(Y*LC/T*8V/T*LV)*B12	FC/MC/PC43B	17	760	24.0	17.2	14.00	12.00
	(Y*LC/T*8V/T*LV)*C16	FC/MC/PC43C	21	895	24.0	18.1	14.50	12.00
	(Y*LC/T*8V/T*LV)*C20	FC/MC/PC43C	21	760	24.0	17.2	14.50	12.00
	(Y*9C/T*9V)*B12	FC/MC/PC43B	17	800	24.0	17.3	14.50	12.00
	(Y*9C/T*9V)*C16	FC/MC/PC43C	21	810	24.0	17.3	14.50	12.00
	(Y*9C/T*9V)*C20	FC/MC/PC43C	21	890	24.0	18.1	14.50	12.00
YHJD30S41S4	T*(8,L)X*A12	FC/MC/PC32A	14	970	30.0	22.0	14.00	12.00
	T*(8,L)X*B12	FC/MC/PC35B	17	1120	30.0	23.2	14.50	12.00
	T*(8,L)X*C16	FC/MC/PC35C	21	1105	30.0	23.2	14.50	12.00
	T*(8,L)X*C20	FC/MC/PC35C	21	850	29.8	21.4	14.50	12.00
	T*9X*B12	FC/MC/PC35B	17	1085	30.0	23.0	14.50	12.00
	T*9X*C16	FC/MC/PC35C	21	1075	30.0	23.0	14.50	12.00
	T*9X*C20	FC/MC/PC35C	21	835	29.8	21.2	14.50	12.00
	T*(8,L)X*A12	FC/MC/PC37A	14	1105	30.0	23.2	14.50	12.00
	T*(8,L)X*B12	FC/MC/PC43B	17	1125	30.0	23.4	14.50	12.00
	T*(8,L)X*C16	FC/MC/PC43C	21	955	30.0	22.2	14.50	12.00
	T*(8,L)X*C20	FC/MC/PC43C	21	870	30.0	21.6	14.50	12.00
	T*9X*B12	FC/MC/PC43B	17	1095	30.0	23.2	14.50	12.00
	T*9X*C16	FC/MC/PC43C	21	1055	30.0	22.8	14.50	12.00
	T*9X*C20	FC/MC/PC43C	21	720	29.2	19.9	14.50	12.00
	(Y*LC/T*8V/T*LV)*A12	FC/MC/PC32A	14	1045	30.0	22.0	13.50	11.00
	(Y*LC/T*8V/T*LV)*B12	FC/MC/PC35B	17	995	30.0	22.0	14.50	12.00
	(Y*LC/T*8V/T*LV)*C16	FC/MC/PC35C	21	1025	30.0	22.0	14.50	12.00
	(Y*LC/T*8V/T*LV)*C20	FC/MC/PC35C	21	1080	30.0	23.0	14.50	12.00
	(Y*9C/T*9V)*B12	FC/MC/PC35B	17	1045	30.0	22.0	14.00	11.50
	(Y*9C/T*9V)*C16	FC/MC/PC35C	21	1005	30.0	22.0	14.50	12.00
	(Y*9C/T*9V)*C20	FC/MC/PC35C	21	985	30.0	22.0	14.50	12.00
	(Y*LC/T*8V/T*LV)*A12	FC/MC/PC37A	14	950	30.0	22.0	14.50	12.00
	(Y*LC/T*8V/T*LV)*B12	FC/MC/PC43B	17	1040	30.0	22.8	14.50	12.00
	(Y*LC/T*8V/T*LV)*C16	FC/MC/PC43C	21	990	30.0	22.2	14.50	12.00
	(Y*LC/T*8V/T*LV)*C20	FC/MC/PC43C	21	1000	30.0	22.2	14.50	12.00
	(Y*9C/T*9V)*B12	FC/MC/PC43B	17	1035	30.0	22.2	14.50	12.00
	(Y*9C/T*9V)*C16	FC/MC/PC43C	21	1030	30.0	22.2	14.50	12.00
	(Y*9C/T*9V)*C20	FC/MC/PC43C	21	995	30.0	22.2	14.50	12.00
YHJD36S41S4	T*(8,L)X*A12	FC/MC/PC37A	14	1290	36.0	27.6	14.50	12.00
	T*(8,L)X*B12	FC/MC/PC43B	17	1300	36.0	27.6	14.50	12.00
	T*(8,L)X*C16	FC/MC/PC43C	21	1175	36.0	26.8	14.50	12.00
	T*(8,L)X*C20	FC/MC/PC43C	21	1250	36.0	27.4	14.50	12.00
	T*9X*B12	FC/MC/PC43B	17	1270	36.0	27.4	14.50	12.00
	T*9X*C16	FC/MC/PC43C	21	1260	36.0	27.4	14.50	12.00
	T*9X*C20	FC/MC/PC43C	21	1185	36.0	26.8	14.50	12.00
	T*(8,L)X*C16	FC/MC/PC48C	21	1185	36.0	26.6	14.50	12.00
	T*(8,L)X*C20	FC/MC/PC48C	21	1270	36.0	27.2	14.50	12.00
	T*9X*C16	FC/MC/PC48C	21	1280	36.0	27.2	14.50	12.00
	T*9X*C20	FC/MC/PC48C	21	1205	36.0	26.6	14.50	12.00
	T*9X*D20	FC/MC/PC48D	24	1240	36.0	26.6	14.50	12.00
	T*(8,L)X*C16	UC48C	21	1185	36.0	26.8	14.50	12.00
	T*(8,L)X*C20	UC48C	21	1270	36.0	27.4	14.50	12.00
	T*9X*C16	UC48C	21	1280	36.0	27.4	14.50	12.00
	T*9X*C20	UC48C	21	1205	36.0	26.8	14.50	12.00
	T*9X*D20	UC48D	24	1240	36.0	26.8	14.50	12.00

For Notes See Page 11.

COOLING CAPACITY - With High Efficiency Motor Furnaces (Continued)

UNIT MODEL	FURNACE MODEL	COIL MODEL[1]	WIDTH	COOLING				
				RATED CFM	Net MBH		SEER	EER
					TOTAL	SENS.		
13 SEER HP WITH HIGH EFFICIENCY MOTOR FURNACES[2]								
YHJD36S41S4	(Y*LC/T*8V/T*LV)*B12	FC/MC/PC43B	17	1270	36.0	27.2	13.75	11.50
	(Y*LC/T*8V/T*LV)*C16	FC/MC/PC43C	21	1205	36.0	26.8	14.50	12.00
	(Y*LC/T*8V/T*LV)*C20	FC/MC/PC43C	21	1190	36.0	26.8	14.50	12.00
	(Y*9C/T*9V)*B12	FC/MC/PC43B	17	1200	36.0	26.8	14.00	11.50
	(Y*9C/T*9V)*C16	FC/MC/PC43C	21	1240	36.0	27.0	14.00	12.00
	(Y*9C/T*9V)*C20	FC/MC/PC43C	21	1200	36.0	26.8	14.50	12.00
	(Y*LC/T*8V/T*LV)*A12	FC/MC/PC37A	14	1150	36.0	26.4	13.75	11.50
	(Y*LC/T*8V/T*LV)*C16	FC/MC/PC48C	21	1210	36.0	26.6	14.50	12.00
	(Y*LC/T*8V/T*LV)*C20	FC/MC/PC48C	21	1155	36.0	26.6	14.50	12.00
	(Y*9C/T*9V)*C16	FC/MC/PC48C	21	1195	36.0	26.6	14.50	12.00
	(Y*9C/T*9V)*C20	FC/MC/PC48C	21	1330	36.0	27.6	14.50	12.00
	(Y*9C/T*9V)*D20	FC/MC/PC48D	24	1240	36.0	26.6	14.50	12.00
	(Y*LC/T*8V/T*LV)*C16	UC48C	21	1210	36.0	26.8	14.50	12.00
	(Y*LC/T*8V/T*LV)*C20	UC48C	21	1155	36.0	26.8	14.50	12.00
	(Y*9C/T*9V)*C16	UC48C	21	1195	36.0	26.8	14.50	12.00
	(Y*9C/T*9V)*C20	UC48C	21	1330	36.0	27.8	14.50	12.00
	(Y*9C/T*9V)*D20	UC48D	24	1240	36.0	26.8	14.50	12.00
YHJD42S41S4	T*(8,L)X*C16	FC/MC/PC48C	21	1360	40.5	29.4	14.00	12.00
	T*(8,L)X*C20	FC/MC/PC48C	21	1475	40.5	30.4	14.00	12.00
	T*9X*C16	FC/MC/PC48C	21	1425	40.5	29.8	13.50	11.50
	T*9X*C20	FC/MC/PC48C	21	1420	40.5	29.8	13.75	11.50
	T*9X*D20	FC/MC/PC48D	24	1435	40.5	30.0	14.00	12.00
	T*(8,L)X*C16	FC/PC60C	21	1360	42.0	32.6	14.50	12.00
	T*(8,L)X*C20	FC/PC60C	21	1485	42.0	33.4	14.50	12.00
	T*9X*C16	FC/PC60C	21	1460	42.0	33.2	14.00	12.00
	T*9X*C20	FC/PC60C	21	1460	42.0	33.2	14.50	12.00
	T*9X*D20	FC/MC/PC60D	24	1515	42.0	33.6	14.50	12.00
	T*(8,L)X*C16	HD60	21	1420	41.5	32.2	14.00	12.00
	T*(8,L)X*C20	HD60	21	1410	42.0	32.4	14.00	12.00
	T*9X*C16	HD60	21	1465	41.5	32.0	14.00	12.00
	T*9X*C20	HD60	21	1465	42.0	32.0	14.00	12.00
	T*9X*D20	HD60	24	1460	42.0	32.0	14.00	12.00
	T*(8,L)X*C16	UC60C	21	1400	41.5	31.6	14.00	12.00
	T*(8,L)X*C20	UC60C	21	1485	41.5	32.8	14.00	12.00
	T*9X*C16	UC60C	21	1460	41.0	31.4	13.75	11.50
	T*9X*C20	UC60C	21	1460	41.5	31.6	14.00	12.00
	T*9X*D20	UC60D	24	1515	42.0	33.2	14.50	12.00
	(Y*LC/T*8V/T*LV)*C16	FC/MC/PC48C	21	1435	40.0	29.8	13.25	11.50
	(Y*LC/T*8V/T*LV)*C20	FC/MC/PC48C	21	1410	40.0	29.6	13.50	11.50
	(Y*9C/T*9V)*C16	FC/MC/PC48C	21	1395	40.0	29.2	13.20	11.50
	(Y*9C/T*9V)*C20	FC/MC/PC48C	21	1430	40.0	29.6	13.15	11.50
	(Y*9C/T*9V)*D20	FC/MC/PC48D	24	1450	40.5	29.8	13.25	11.50
	(Y*LC/T*8V/T*LV)*C16	FC/PC60C	21	1420	41.5	32.2	14.00	12.00
	(Y*LC/T*8V/T*LV)*C20	FC/PC60C	21	1410	42.0	32.4	14.00	12.00
	(Y*9C/T*9V)*C16	FC/PC60C	21	1445	41.0	32.0	13.25	11.50
	(Y*9C/T*9V)*C20	FC/PC60C	21	1445	41.5	32.0	13.75	11.50
	(Y*9C/T*9V)*D20	FC/MC/PC60D	24	1445	41.5	32.2	13.75	11.50
	(Y*LC/T*8V/T*LV)*C16	HD60	21	1420	41.5	31.8	14.00	12.00
	(Y*LC/T*8V/T*LV)*C20	HD60	21	1410	41.5	32.0	14.00	12.00
	(Y*9C/T*9V)*C16	HD60	21	1445	41.0	31.6	13.25	11.50
	(Y*9C/T*9V)*C20	HD60	21	1445	41.5	31.8	13.50	11.50
	(Y*9C/T*9V)*D20	HD60	24	1445	41.5	31.8	13.75	11.50

For Notes See Page 11.

COOLING CAPACITY - With High Efficiency Motor Furnaces (Continued)

UNIT MODEL	FURNACE MODEL	COIL MODEL[1]	WIDTH	COOLING				
				RATED CFM	Net MBH		SEER	EER
					TOTAL	SENS.		
13 SEER HP WITH HIGH EFFICIENCY MOTOR FURNACES[2]								
YHJD42S41S4	(Y*LC/T*8V/T*LV)*C16	UC60C	21	1420	41.0	31.4	13.75	11.50
	(Y*LC/T*8V/T*LV)*C20	UC60C	21	1410	41.0	31.4	14.00	12.00
	(Y*9C/T*9V)*C16	UC60C	21	1445	40.5	31.0	13.20	11.50
	(Y*9C/T*9V)*C20	UC60C	21	1445	41.0	31.2	13.50	11.50
	(Y*9C/T*9V)*D20	UC60D	24	1445	41.0	31.4	13.50	11.50
YHJD48S41S4	T*(8,L)X*C16	FC/PC60C	21	1605	44.5	33.8	14.50	12.00
	T*(8,L)X*C20	FC/PC60C	21	1595	44.5	34.0	14.50	12.00
	T*9X*C16	FC/PC60C	21	1575	44.5	33.8	14.50	12.00
	T*9X*C20	FC/PC60C	21	1625	44.5	34.0	14.50	12.00
	T*9X*D20	FC/MC/PC60D	24	1490	45.5	33.6	14.50	12.00
	T*(8,L)X*C16	FC/MC62D	21	1610	45.0	34.2	14.50	12.00
	T*(8,L)X*C20	FC/MC62D	21	1665	45.5	34.4	14.50	12.00
	T*9X*C16	FC/MC62D	21	1550	45.0	34.2	14.50	12.00
	T*9X*C20	FC/MC62D	21	1595	45.0	34.2	14.50	12.00
	T*9X*D20	FC/MC62D	24	1610	45.0	34.2	14.50	12.00
	T*(8,L)X*C16	UC60C	21	1605	44.5	33.2	14.50	12.00
	T*(8,L)X*C20	UC60C	21	1540	45.0	33.6	14.50	12.00
	T*9X*C16	UC60C	21	1575	44.5	33.2	14.50	12.00
	T*9X*C20	UC60C	21	1625	44.5	33.2	14.50	12.00
	T*9X*D20	UC60D	24	1490	44.5	32.8	14.50	12.00
	(Y*LC/T*8V/T*LV)*C16	FC/PC60C	21	1600	44.5	33.6	14.00	12.00
	(Y*LC/T*8V/T*LV)*C20	FC/PC60C	21	1620	44.5	33.8	14.00	12.00
	(Y*9C/T*9V)*C16	FC/PC60C	21	1590	44.0	33.6	14.00	12.00
	(Y*9C/T*9V)*C20	FC/PC60C	21	1645	44.0	33.6	14.00	12.00
	(Y*9C/T*9V)*D20	FC/MC/PC60D	24	1615	44.5	33.6	14.00	12.00
	(Y*LC/T*8V/T*LV)*C16	FC/MC62D	21	1635	45.0	34.2	14.50	12.00
	(Y*LC/T*8V/T*LV)*C20	FC/MC62D	21	1615	45.0	34.2	14.50	12.00
	(Y*9C/T*9V)*C16	FC/MC62D	21	1590	45.0	34.0	14.00	12.00
	(Y*9C/T*9V)*C20	FC/MC62D	21	1655	44.5	33.8	14.00	12.00
	(Y*9C/T*9V)*D20	FC/MC62D	24	1630	45.0	34.0	14.00	12.00
	(Y*LC/T*8V/T*LV)*C16	UC60C	21	1625	44.0	33.0	14.00	12.00
	(Y*LC/T*8V/T*LV)*C20	UC60C	21	1605	44.5	33.2	14.50	12.00
	(Y*9C/T*9V)*C16	UC60C	21	1590	44.0	33.0	14.00	12.00
	(Y*9C/T*9V)*C20	UC60C	21	1645	44.0	33.0	13.75	11.50
	(Y*9C/T*9V)*D20	UC60D	24	1615	44.0	33.0	14.00	12.00
YHJD60S41S4	T*(8,L)X*C20	FC/MC62D	21	1665	55.0	39.5	14.00	12.00
	T*9X*C20	FC/MC62D	21	1595	55.0	38.5	14.00	12.00
	T*9X*D20	FC/MC62D	24	1645	55.0	39.0	14.00	12.00
	T*(8,L)X*C20	FC64D	21	1665	56.0	40.5	14.50	12.00
	T*9X*C20	FC64D	21	1595	56.0	39.5	14.50	12.00
	T*9X*D20	FC64D	24	1645	56.0	40.0	14.50	12.00
	(Y*LC/T*8V/T*LV)*C20	FC/MC62D	21	1615	54.5	38.5	14.00	12.00
	(Y*9C/T*9V)*C20	FC/MC62D	21	1655	54.5	38.5	13.50	11.50
	(Y*9C/T*9V)*D20	FC/MC62D	24	1630	54.5	38.5	13.75	11.50
	(Y*LC/T*8V/T*LV)*C20	FC64D	21	1615	55.5	40.0	14.00	12.00
	(Y*9C/T*9V)*C20	FC64D	21	1655	55.5	40.0	14.00	11.50
	(Y*9C/T*9V)*D20	FC64D	24	1630	55.5	39.5	14.00	11.50

1. MC coils available with a factory installed horizontal drain pan. See price pages for specific model number.
2. High Efficiency Motor Furnaces have B.O.D (Blower on Delay) standard.

PSC furnaces, such as the TG8S, TGLS, and TG9S, use Coil Only Ratings.

HEATING CAPACITY - With Air Handler

UNIT MODEL	AIR HANDLER	COIL[1] MODEL	HEATING[2]						
			47 °F			17 °F			HSPF
			MBH	COP	KW	MBH	COP	KW	STD
13 SEER AC WITH AIR HANDLERS									
YHJD18S41S2	AHE18B	–	18.0	3.70	1.43	11.1	2.28	1.43	7.70
	AHP18	–	18.0	3.38	1.47	8.2	2.16	1.11	7.70
	AHP24	–	18.0	3.38	1.47	8.2	2.16	1.11	7.70
	AHR18B	–	18.0	3.54	1.49	11.4	2.22	1.50	7.70
	AHX18	–	18.0	3.58	1.47	8.6	2.52	1.11	7.95
	AV*24	–	18.0	3.62	1.36	11.5	3.18	1.06	8.00
	F4FP024	–	18.0	3.34	1.49	12.5	3.04	1.21	7.70
	F6FP018	–	18.0	3.58	1.47	8.6	2.52	1.11	7.95
	F6FP024	–	18.0	3.64	1.49	9.9	2.52	1.11	8.20
	MV12B	FC/MC18B	18.0	3.52	1.39	12.7	3.00	1.24	8.00
	MV12B	FC/MC24B	18.0	3.66	1.36	9.8	2.78	1.03	8.00
	MX12B	FC/MC18B	18.0	3.70	1.43	11.0	2.28	1.41	8.20
	MX12B	FC/MC24B	18.0	3.98	1.33	10.9	2.46	1.30	8.20
	MX12B	FC/MC30B	18.0	3.98	1.33	10.9	2.46	1.30	8.20
YHJD24S41S4	AHE24B	–	23.4	3.58	1.92	13.3	2.50	1.56	8.20
	AHE30B	–	23.4	3.58	1.92	13.3	2.50	1.56	8.20
	AHP30	–	24.0	3.36	2.09	13.9	2.38	1.71	7.70
	AHR24B	–	23.4	3.40	2.02	13.5	2.40	1.65	7.70
	AHR30B	–	23.4	3.40	2.02	13.5	2.40	1.65	7.70
	AHX30	–	24.0	3.62	1.94	13.7	2.54	1.58	8.20
	AHX36	–	24.0	3.62	1.94	13.7	2.54	1.58	8.20
	AV*36	–	23.2	3.64	1.87	13.3	2.62	1.49	8.20
	F4FP040	–	24.0	3.36	2.09	13.9	2.38	1.71	7.70
	F6FP030	–	23.8	3.56	1.96	13.6	2.52	1.58	8.20
	F6FP036	–	23.6	3.60	1.92	13.5	2.56	1.55	8.20
	MV12B	FC/MC35B	23.2	3.56	1.91	13.3	2.54	1.53	8.20
	MV12B	FC/MC43B	23.8	3.66	1.91	13.5	2.60	1.52	8.20
	MX12B	FC/MC35B	23.2	3.64	1.87	13.0	2.56	1.49	8.20
	MX12B	FC/MC43B	23.2	3.62	1.88	13.0	2.54	1.50	8.20
YHJD30S41S4	AHE30B	–	26.6	3.40	2.29	15.5	2.42	1.88	7.70
	AHE36C	–	26.8	3.56	2.21	15.3	2.50	1.79	7.70
	AHP30	–	27.4	3.30	2.43	16.1	2.32	2.03	7.70
	AHP36	–	27.8	3.38	2.41	16.1	2.32	2.03	7.70
	AHR30B	–	27.6	3.30	2.45	16.2	2.32	2.05	7.70
	AHR36B	–	27.8	3.36	2.42	16.2	2.32	2.05	7.70
	AHX30	–	27.2	3.48	2.29	15.7	2.44	1.89	8.05
	AHX36	–	27.2	3.64	2.19	15.4	2.52	1.79	8.20
	AV*36	–	27.2	3.66	2.18	15.4	2.54	1.78	8.20
	F4FP040	–	27.4	3.28	2.45	16.0	2.30	2.04	7.70
	F6FP030	–	27.2	3.36	2.37	15.8	2.36	1.96	7.90
	F6FP036	–	26.8	3.48	2.26	15.4	2.46	1.83	8.00
	MV12B	FC/MC35B	26.8	3.50	2.24	15.4	2.48	1.82	8.00
	MV16C	FC/MC35C	27.0	3.56	2.22	15.4	2.50	1.80	8.15
	MV12B	FC/MC43B	27.4	3.58	2.24	15.6	2.46	1.86	8.20
	MV16C	FC/MC43C	27.4	3.60	2.23	15.5	2.48	1.83	8.20
	MX12B	FC/MC35B	26.8	3.46	2.27	15.5	2.44	1.86	7.70
	MX16C	FC/MC35C	26.4	3.56	2.17	15.2	2.52	1.77	7.70
	MX12B	FC/MC43B	27.2	3.56	2.24	15.6	2.48	1.84	7.70
	MX16C	FC/MC43C	26.4	3.56	2.17	15.2	2.50	1.78	7.70

For Notes See Page 14.

HEATING CAPACITY - With Air Handler (Continued)

UNIT MODEL	AIR HANDLER	COIL[1] MODEL	HEATING[2]						
			47 °F			17 °F			HSPF
			MBH	COP	KW	MBH	COP	KW	STD
13 SEER AC WITH AIR HANDLERS									
YHJD36S41S4	AHE36C	–	30.6	3.44	2.61	21.6	2.84	2.23	8.20
	AHE42D	–	39.0	3.90	2.93	21.8	2.64	2.42	8.20
	AHP36	–	34.6	3.36	3.02	22.4	2.58	2.54	8.00
	AHP42	–	34.8	3.48	2.93	22.4	2.64	2.49	8.00
	AHR36B	–	31.4	3.28	2.80	22.6	2.68	2.47	7.70
	AHR42C	–	31.4	3.32	2.77	22.2	2.70	2.41	7.70
	AHX36	–	33.8	3.62	2.74	21.6	2.80	2.26	8.20
	AHX42	–	33.8	3.70	2.68	21.6	2.86	2.21	8.20
	AV*36	–	33.8	3.60	2.75	21.8	2.80	2.28	8.20
	F5FP048	–	34.4	3.68	2.74	21.8	2.80	2.28	8.20
	F6FP042	–	34.4	3.70	2.72	22.0	2.80	2.30	8.20
	MV12B	FC/MC43B	34.2	3.58	2.80	21.8	2.76	2.31	8.20
	MV16C	FC/MC43C	33.8	3.60	2.75	21.6	2.78	2.28	8.20
	MV12D	FC/MC48D	33.8	3.70	2.68	21.6	2.86	2.21	8.20
	MV16C	FC/MC48C	34.0	3.64	2.74	21.8	2.82	2.27	8.20
	MX12B	FC/MC43B	30.8	3.38	2.67	21.8	2.78	2.30	7.70
	MX16C	FC/MC43C	30.2	3.44	2.57	21.0	2.84	2.17	7.70
	MX12D	FC/MC48D	30.8	3.48	2.59	21.6	2.84	2.23	8.20
	MX16C	FC/MC48C	30.2	3.48	2.54	21.4	2.88	2.18	7.70
YHJD42S41S4	AHE48D	–	39.5	3.86	3.00	22.2	2.58	2.52	8.00
	AHR48D	–	40.0	3.66	3.20	22.4	2.48	2.65	7.70
	AHP60	–	40.0	3.92	2.99	22.4	2.64	2.49	8.20
	AHP48	–	40.0	3.70	3.17	22.8	2.50	2.67	7.70
	AHX42	–	35.6	3.64	2.87	23.4	2.84	2.41	8.20
	AHX48	–	39.0	3.88	2.95	22.2	2.68	2.43	8.20
	AV*48	–	39.5	3.96	2.92	22.2	2.68	2.43	8.20
	AV*60	–	39.5	3.98	2.91	22.2	2.70	2.41	8.20
	F4FP045	–	40.5	3.74	3.17	23.0	2.50	2.70	7.70
	F5FP060	–	40.0	3.94	2.97	22.6	2.66	2.49	8.20
	F6FP048	–	39.5	3.96	2.92	22.2	2.66	2.45	8.20
	F4FV060	–	40.0	3.96	2.96	22.2	2.66	2.45	8.20
	MV16C	FC/MC48C	36.0	3.58	2.95	23.4	2.76	2.48	8.20
	MV20D	FC/MC48D	36.0	3.66	2.88	23.4	2.82	2.43	8.20
	MV16C	FC60C	39.5	3.90	2.97	22.4	2.62	2.51	8.20
	MV20D	FC/MC60D	39.5	3.94	2.94	22.2	2.66	2.45	8.20
	MX16C	FC/MC48C	39.0	3.94	2.90	21.8	2.66	2.40	8.20
	MX20D	FC/MC48D	39.0	3.92	2.92	22.0	2.64	2.44	8.20
	MX16C	FC60C	40.0	4.08	2.87	22.0	2.66	2.42	8.20
	MX20D	FC/MC60D	40.0	4.10	2.86	21.8	2.68	2.38	8.20
YHJD48S41S4	AHE48D	–	45.5	3.68	3.62	26.8	2.84	2.76	8.20
	AHE60D	–	45.0	3.72	3.58	27.2	2.86	2.79	8.20
	AHP48	–	46.5	3.50	3.89	27.6	2.72	2.97	7.70
	AHP60	–	45.5	3.70	3.60	27.0	2.84	2.79	7.70
	AHR48D	–	46.0	3.56	3.79	27.4	2.74	2.93	7.70
	AHR60D	–	45.5	3.58	3.72	27.4	2.76	2.91	7.70
	AHX48	–	45.0	3.68	3.58	26.6	2.86	2.73	8.20
	AHX60	–	45.0	3.74	3.53	26.4	2.92	2.65	8.20
	AV*48	–	46.0	3.78	3.57	26.8	2.90	2.71	8.20
	AV*60	–	45.5	3.80	3.51	26.8	2.94	2.67	8.20

For Notes See Page 14.

HEATING CAPACITY - With Air Handler (Continued)

UNIT MODEL	AIR HANDLER	COIL[1] MODEL	HEATING[2]						
			47 °F			17 °F			HSPF
			MBH	COP	KW	MBH	COP	KW	STD
13 SEER AC WITH AIR HANDLERS									
YHJD48S41S4	F5FP060	–	46.0	3.70	3.64	27.2	2.84	2.81	8.20
	F6FP048	–	46.0	3.76	3.58	27.0	2.90	2.73	8.20
	F6FP060	–	45.0	3.74	3.53	26.4	2.92	2.65	8.20
	F4FV060	–	46.0	3.74	3.60	27.0	2.88	2.75	8.20
	MV16C	FC60C	46.0	3.58	3.76	27.4	2.76	2.91	8.20
	MV20D	FC/MC60D	45.5	3.72	3.58	27.0	2.86	2.77	8.20
	MV20D	FC/MC62D	45.0	3.72	3.54	26.6	2.90	2.69	8.20
	MX16C	FC60C	45.5	3.82	3.49	26.6	2.94	2.65	8.20
	MX20D	FC/MC60D	45.5	3.84	3.47	26.6	2.94	2.65	8.20
	MX20D	FC/MC62D	45.5	3.80	3.51	26.4	2.94	2.63	8.20
YHJD60S41S4	AHE60D	–	57.5	3.40	4.96	36.0	2.62	4.03	8.20
	AHX60	–	57.0	3.40	4.91	36.4	2.64	4.04	8.20
	F6FP060	–	57.0	3.44	4.85	36.4	2.66	4.01	8.20
	MV20D	FC/MC62D	57.0	3.38	4.94	36.2	2.60	4.08	8.20
	MV20D	FC64D	57.0	3.44	4.85	36.6	2.64	4.06	8.20
	MX20D	FC/MC62D	57.0	3.44	4.85	35.8	2.66	3.94	8.20
	MX20D	FC64D	57.5	3.52	4.79	36.0	2.70	3.91	8.20

1. Rated CFM same as for cooling.
2. Heating MBH based on AHRI standards of 70 °F DB (Dry Bulb) entering indoor air, 72% RH (Relative Humidity) outdoor air with 25 feet of interconnecting piping and no supplemental electric heat operation.

COP equals MBH output divided by (total KW input x 3.412).

HSPF (Heating Seasonal Performance Factor) is the total heating output during a normal annual usage period for heating divided by the total electric power input during the same period.

MA Modular Air Handlers use Coil Only Ratings.

— = Not Applicable.

HEATING CAPACITY - Upflow, Downflow, and Horizontal Furnaces and Coils (Coil Only Ratings)

UNIT MODEL	COIL[1] MODEL	HEATING[2]						
		47 °F			17 °F			HSPF
		MBH	COP	KW	MBH	COP	KW	STD
YHJD18S41S2	FC/MC/PC/UC18	18.0	3.32	1.50	12.7	3.00	1.24	7.70
	FC/MC/PC/UC24	18.0	3.44	1.45	10.4	2.60	1.17	7.70
	HD24	18.0	3.16	1.54	12.8	3.00	1.25	7.70
YHJD24S41S4	FC/MC/PC32	24.0	3.36	2.09	13.9	2.38	1.71	7.70
	FC/MC/PC35	23.8	3.32	2.10	13.9	2.36	1.73	7.70
	FC/MC/PC37	24.0	3.44	2.04	14.1	2.42	1.71	7.70
	FC/MC/PC43	24.0	3.44	2.04	14.1	2.42	1.71	7.70
YHJD30S41S4	FC/MC/PC32	27.4	3.28	2.45	16.0	2.30	2.04	7.70
	FC/MC/PC35	27.4	3.28	2.45	16.0	2.30	2.04	7.70
	FC/MC/PC37	28.0	3.38	2.43	16.1	2.32	2.03	7.70
	FC/MC/PC43	28.0	3.38	2.43	16.1	2.32	2.03	7.70
YHJD36S41S4	FC/MC/PC43	34.6	3.40	2.98	22.2	2.60	2.50	8.00
	FC/MC/PC37	34.4	3.42	2.95	22.4	2.62	2.51	8.00
	HD48	33.2	3.16	3.08	21.6	2.50	2.53	8.00
	FC/MC/PC48	34.8	3.44	2.96	22.6	2.64	2.51	8.00
	UC48	35.0	3.52	2.91	22.4	2.62	2.51	8.00
YHJD42S41S4	FC/MC/PC60	40.5	3.72	3.19	23.0	2.50	2.70	7.70
	HD60	38.5	3.44	3.28	22.8	2.46	2.72	7.70
	UC60	40.0	3.68	3.18	22.8	2.48	2.69	7.70
YHJD48S41S4	FC/MC/PC60	46.0	3.58	3.76	27.4	2.76	2.91	7.70
	FC/MC62	46.0	3.54	3.81	27.4	2.76	2.91	7.70
	UC60	46.0	3.56	3.79	27.4	2.74	2.93	7.70
YHJD60S41S4	FC/MC62	57.0	3.32	5.03	36.6	2.56	4.19	7.70
	FC64	57.0	3.40	4.91	36.8	2.60	4.15	7.70

1. Rated CFM same as for cooling.
2. Heating MBH based on AHRI standards of 70 °F DB (Dry Bulb) entering indoor air, 72% RH (Relative Humidity) outdoor air with 25 feet of interconnecting piping and no supplemental electric heat operation.

COP equals MBH output divided by (total KW input x 3.412).
HSPF (Heating Seasonal Performance Factor) is the total heating output during a normal annual usage period for heating divided by the total electric power input during the same period.
MA Modular Air Handlers use Coil Only Ratings.
PSC furnaces, such as the TG8S, TGLS, and TG9S, use Coil Only Ratings.
— = Not Applicable.

HEATING CAPACITY - With High Efficiency Motor Furnaces

MODEL	FURNACE MODEL	COIL[1] MODEL	HEATING[2]						
			47 °F			17 °F			HSPF
			MBH	COP	KW	MBH	COP	KW	STD
13 SEER HP WITH HIGH EFFICIENCY MOTOR FURNACES[3]									
YHJD18S41S2	T*(8,L)X*A12	FC/MC/PC18A	18.0	2.92	1.81	11.1	2.24	1.45	8.10
	T*(8,L)X*B12	FC/MC/PC18B	18.0	3.00	1.76	11.0	2.28	1.41	8.15
	T*9X*B12	FC/MC/PC18B	18.0	3.00	1.76	11.0	2.30	1.40	8.10
	T*(8,L)X*A12	FC/MC/PC24A	18.0	3.16	1.67	10.9	2.44	1.31	8.20
	T*(8,L)X*B12	FC/MC/PC24B	18.0	3.16	1.67	10.9	2.44	1.31	8.20
	T*9X*B12	FC/MC/PC24B	18.0	3.16	1.67	10.9	2.42	1.32	8.20
	T*(8,L)X*A12	FC/MC/PC30A	18.0	3.16	1.67	10.9	2.44	1.31	8.20
	T*(8,L)X*B12	FC/MC/PC30B	18.0	3.16	1.67	10.9	2.44	1.31	8.20
	T*9X*B12	FC/MC/PC30B	18.0	3.16	1.67	10.9	2.42	1.32	8.20
	(Y*LC/T*8V/T*LV)*A12	FC/MC/PC18A	18.0	3.58	1.37	7.7	2.28	0.99	8.00
	(Y*LC/T*8V/T*LV)*B12	FC/MC/PC18B	18.0	3.56	1.37	7.7	2.30	0.98	7.90
	(Y*9C/T*9V)*B12	FC/MC/PC18B	18.0	3.60	1.36	7.7	2.30	0.98	8.00
	(Y*LC/T*8V/T*LV)*A12	FC/MC/PC24A	18.0	3.70	1.36	10.6	2.90	1.07	8.30
	(Y*LC/T*8V/T*LV)*B12	FC/MC/PC24B	18.0	3.68	1.34	10.1	2.88	1.03	8.20
	(Y*9C/T*9V)*B12	FC/MC/PC24B	18.0	3.74	1.34	10.5	2.94	1.05	8.30
	(Y*LC/T*8V/T*LV)*A12	FC/MC/PC30A	18.0	3.70	1.36	10.6	2.90	1.07	8.30
	(Y*LC/T*8V/T*LV)*B12	FC/MC/PC30B	18.0	3.68	1.34	10.1	2.88	1.03	8.20
	(Y*9C/T*9V)*B12	FC/MC/PC30B	18.0	3.74	1.34	10.5	2.94	1.05	8.30
	(Y*LC/T*8V/T*LV)*A12	HD24	18.0	3.56	1.37	8.8	2.48	1.04	8.00
	(Y*LC/T*8V/T*LV)*B12	HD24	18.0	3.50	1.36	9.1	2.62	1.02	7.80
	(Y*9C/T*9V)*B12	HD24	18.0	3.58	1.37	8.7	2.50	1.02	8.00
	(Y*LC/T*8V/T*LV)*A12	UC18A	18.0	3.62	1.37	9.1	2.58	1.03	8.10
	(Y*LC/T*8V/T*LV)*B12	UC18B	18.0	3.60	1.36	9.7	2.74	1.04	8.00
	(Y*9C/T*9V)*B12	UC18B	18.0	3.64	1.35	9.1	2.62	1.02	8.10
	(Y*LC/T*8V/T*LV)*A12	UC24A	18.0	3.72	1.36	10.7	2.94	1.07	8.30
	(Y*LC/T*8V/T*LV)*B12	UC24B	18.0	3.70	1.34	10.5	2.96	1.04	8.20
	(Y*9C/T*9V)*B12	UC24B	18.0	3.76	1.34	10.7	2.96	1.06	8.30
	(Y*LC/T*8V/T*LV)*A12	UC30A	18.0	3.72	1.36	10.7	2.94	1.07	8.30
	(Y*LC/T*8V/T*LV)*B12	UC30B	18.0	3.70	1.34	10.4	2.96	1.03	8.20
	(Y*9C/T*9V)*B12	UC30B	18.0	3.76	1.34	10.7	2.96	1.06	8.30
YHJD24S41S4	T*(8,L)X*A12	FC/MC/PC32A	23.2	3.64	1.87	13.3	2.60	1.50	8.20
	T*(8,L)X*B12	FC/MC/PC35B	23.4	3.68	1.86	13.3	2.62	1.49	8.20
	T*(8,L)X*C16	FC/MC/PC35C	23.4	3.68	1.86	13.3	2.62	1.49	8.20
	T*(8,L)X*C20	FC/MC/PC35C	23.6	3.62	1.91	13.4	2.58	1.52	8.20
	T*9X*B12	FC/MC/PC35B	23.0	3.58	1.88	13.2	2.58	1.50	8.20
	T*9X*C16	FC/MC/PC35C	23.0	3.56	1.89	13.1	2.56	1.50	8.20
	T*9X*C20	FC/MC/PC35C	23.4	3.66	1.87	13.4	2.60	1.51	8.20
	T*(8,L)X*A12	FC/MC/PC37A	23.8	3.78	1.84	13.5	2.66	1.49	8.20
	T*(8,L)X*B12	FC/MC/PC43B	23.8	3.78	1.84	13.5	2.66	1.49	8.20
	T*(8,L)X*C16	FC/MC/PC43C	23.8	3.76	1.85	13.4	2.64	1.49	8.20
	T*(8,L)X*C20	FC/MC/PC43C	23.6	3.70	1.87	13.5	2.62	1.51	8.20
	T*9X*B12	FC/MC/PC43B	23.6	3.72	1.86	13.4	2.64	1.49	8.20
	T*9X*C16	FC/MC/PC43C	23.6	3.72	1.86	13.4	2.64	1.49	8.20
	T*9X*C20	FC/MC/PC43C	23.6	3.70	1.87	13.5	2.62	1.51	8.20
	(Y*LC/T*8V/T*LV)*A12	FC/MC/PC32A	23.4	3.52	1.95	13.5	2.52	1.57	8.20
	(Y*LC/T*8V/T*LV)*B12	FC/MC/PC35B	23.0	3.50	1.93	13.2	2.52	1.53	8.15
	(Y*LC/T*8V/T*LV)*C16	FC/MC/PC35C	23.6	3.62	1.91	13.4	2.58	1.52	8.20
	(Y*LC/T*8V/T*LV)*C20	FC/MC/PC35C	22.8	3.54	1.89	13.0	2.56	1.49	8.15
	(Y*9C/T*9V)*B12	FC/MC/PC35B	23.6	3.58	1.93	13.6	2.54	1.57	8.20
	(Y*9C/T*9V)*C16	FC/MC/PC35C	23.8	3.62	1.93	13.6	2.56	1.56	8.20
	(Y*9C/T*9V)*C20	FC/MC/PC35C	23.0	3.52	1.91	13.1	2.54	1.51	8.15

For Notes See Page 19.

HEATING CAPACITY - With High Efficiency Motor Furnaces (Continued)

MODEL	FURNACE MODEL	COIL[1] MODEL	HEATING[2]						
			47 °F			17 °F			HSPF
			MBH	COP	KW	MBH	COP	KW	STD
13 SEER HP WITH HIGH EFFICIENCY MOTOR FURNACES[3]									
YHJD24S41S4	(Y*LC/T*8V/T*LV)*A12	FC/MC/PC37A	23.8	3.62	1.93	13.6	2.54	1.57	8.20
	(Y*LC/T*8V/T*LV)*B12	FC/MC/PC43B	23.4	3.60	1.90	13.3	2.54	1.53	8.20
	(Y*LC/T*8V/T*LV)*C16	FC/MC/PC43C	24.0	3.74	1.88	13.6	2.60	1.53	8.20
	(Y*LC/T*8V/T*LV)*C20	FC/MC/PC43C	23.2	3.64	1.87	13.2	2.58	1.50	8.20
	(Y*9C/T*9V)*B12	FC/MC/PC43B	23.8	3.64	1.92	13.6	2.56	1.56	8.20
	(Y*9C/T*9V)*C16	FC/MC/PC43C	23.8	3.66	1.91	13.5	2.58	1.53	8.20
	(Y*9C/T*9V)*C20	FC/MC/PC43C	24.0	3.72	1.89	13.7	2.60	1.54	8.20
YHJD30S41S4	T*(8,L)X*A12	FC/MC/PC32A	27.0	3.42	2.31	15.6	2.40	1.90	7.95
	T*(8,L)X*B12	FC/MC/PC35B	27.4	3.52	2.28	15.6	2.44	1.87	8.10
	T*(8,L)X*C16	FC/MC/PC35C	27.2	3.56	2.24	15.4	2.46	1.83	8.15
	T*(8,L)X*C20	FC/MC/PC35C	26.0	3.40	2.24	14.9	2.44	1.79	7.85
	T*9X*B12	FC/MC/PC35B	27.2	3.50	2.28	15.5	2.44	1.86	8.10
	T*9X*C16	FC/MC/PC35C	27.0	3.52	2.25	15.5	2.46	1.85	8.10
	T*9X*C20	FC/MC/PC35C	25.8	3.42	2.21	14.7	2.44	1.77	7.80
	T*(8,L)X*A12	FC/MC/PC37A	27.8	3.64	2.24	15.9	2.50	1.86	8.20
	T*(8,L)X*B12	FC/MC/PC43B	27.8	3.62	2.25	15.8	2.48	1.87	8.20
	T*(8,L)X*C16	FC/MC/PC43C	27.2	3.64	2.19	15.4	2.52	1.79	8.20
	T*(8,L)X*C20	FC/MC/PC43C	26.4	3.52	2.20	15.0	2.48	1.77	8.00
	T*9X*B12	FC/MC/PC43B	27.6	3.60	2.25	15.7	2.48	1.85	8.20
	T*9X*C16	FC/MC/PC43C	27.4	3.60	2.23	15.6	2.48	1.84	8.20
	T*9X*C20	FC/MC/PC43C	25.6	3.34	2.25	14.5	2.40	1.77	7.70
	(Y*LC/T*8V/T*LV)*A12	FC/MC/PC32A	27.4	3.30	2.43	16.0	2.32	2.02	7.85
	(Y*LC/T*8V/T*LV)*B12	FC/MC/PC35B	27.0	3.42	2.31	15.6	2.42	1.89	7.95
	(Y*LC/T*8V/T*LV)*C16	FC/MC/PC35C	26.8	3.48	2.26	15.5	2.44	1.86	8.00
	(Y*LC/T*8V/T*LV)*C20	FC/MC/PC35C	27.2	3.50	2.28	15.5	2.44	1.86	8.10
	(Y*9C/T*9V)*B12	FC/MC/PC35B	27.2	3.36	2.37	15.8	2.36	1.96	7.90
	(Y*9C/T*9V)*C16	FC/MC/PC35C	26.8	3.46	2.27	15.5	2.44	1.86	8.00
	(Y*9C/T*9V)*C20	FC/MC/PC35C	26.8	3.46	2.27	15.5	2.44	1.86	8.00
	(Y*LC/T*8V/T*LV)*A12	FC/MC/PC37A	27.2	3.48	2.29	15.7	2.42	1.90	8.05
	(Y*LC/T*8V/T*LV)*B12	FC/MC/PC43B	27.6	3.52	2.30	15.7	2.42	1.90	8.15
	(Y*LC/T*8V/T*LV)*C16	FC/MC/PC43C	27.4	3.60	2.23	15.5	2.50	1.82	8.20
	(Y*LC/T*8V/T*LV)*C20	FC/MC/PC43C	27.2	3.62	2.20	15.5	2.50	1.82	8.20
	(Y*9C/T*9V)*B12	FC/MC/PC43B	27.6	3.48	2.32	15.8	2.40	1.93	8.10
	(Y*9C/T*9V)*C16	FC/MC/PC43C	27.4	3.54	2.27	15.7	2.44	1.89	8.15
	(Y*9C/T*9V)*C20	FC/MC/PC43C	27.4	3.58	2.24	15.5	2.48	1.83	8.20
YHJD36S41S4	T*(8,L)X*A12	FC/MC/PC37A	34.4	3.62	2.78	22.0	2.76	2.34	8.20
	T*(8,L)X*B12	FC/MC/PC43B	34.2	3.60	2.78	22.0	2.76	2.34	8.20
	T*(8,L)X*C16	FC/MC/PC43C	33.4	3.64	2.69	21.2	2.82	2.20	8.20
	T*(8,L)X*C20	FC/MC/PC43C	34.0	3.66	2.72	21.4	2.80	2.24	8.20
	T*9X*B12	FC/MC/PC43B	34.2	3.58	2.80	22.0	2.74	2.35	8.20
	T*9X*C16	FC/MC/PC43C	34.0	3.60	2.77	21.8	2.76	2.31	8.20
	T*9X*C20	FC/MC/PC43C	33.8	3.58	2.77	21.6	2.76	2.29	8.20
	T*(8,L)X*C16	FC/MC/PC48C	33.8	3.70	2.68	21.6	2.86	2.21	8.20
	T*(8,L)X*C20	FC/MC/PC48C	34.2	3.70	2.71	21.6	2.84	2.23	8.20
	T*9X*C16	FC/MC/PC48C	34.6	3.66	2.77	22.0	2.78	2.32	8.20
	T*9X*C20	FC/MC/PC48C	34.0	3.64	2.74	21.8	2.80	2.28	8.20
	T*9X*D20	FC/MC/PC48D	34.0	3.66	2.72	21.8	2.82	2.27	8.20
	T*(8,L)X*C16	UC48C	34.2	3.80	2.64	21.4	2.86	2.19	8.20
	T*(8,L)X*C20	UC48C	34.6	3.80	2.67	21.8	2.84	2.25	8.20
	T*9X*C16	UC48C	34.8	3.76	2.71	22.0	2.80	2.30	8.20
	T*9X*C20	UC48C	34.4	3.74	2.69	21.6	2.80	2.26	8.20
	T*9X*D20	UC48D	34.4	3.74	2.69	21.6	2.82	2.24	8.20

For Notes See Page 19.

HEATING CAPACITY - With High Efficiency Motor Furnaces (Continued)

MODEL	FURNACE MODEL	COIL[1] MODEL	HEATING[2]						
			47 °F			17 °F			HSPF
			MBH	COP	KW	MBH	COP	KW	STD
13 SEER HP WITH HIGH EFFICIENCY MOTOR FURNACES[3]									
YHJD36S41S4	(Y*LC/T*8V/T*LV)*B12	FC/MC/PC43B	34.6	3.48	2.91	22.4	2.66	2.47	8.20
	(Y*LC/T*8V/T*LV)*C16	FC/MC/PC43C	34.0	3.56	2.80	21.6	2.74	2.31	8.20
	(Y*LC/T*8V/T*LV)*C20	FC/MC/PC43C	33.8	3.58	2.77	21.6	2.76	2.29	8.20
	(Y*9C/T*9V)*B12	FC/MC/PC43B	34.2	3.48	2.88	22.0	2.66	2.42	8.20
	(Y*9C/T*9V)*C16	FC/MC/PC43C	34.0	3.52	2.83	22.0	2.70	2.39	8.20
	(Y*9C/T*9V)*C20	FC/MC/PC43C	34.0	3.56	2.80	21.8	2.74	2.33	8.20
	(Y*LC/T*8V/T*LV)*A12	FC/MC/PC37A	34.0	3.46	2.88	22.2	2.66	2.45	8.20
	(Y*LC/T*8V/T*LV)*C16	FC/MC/PC48C	34.2	3.62	2.77	21.8	2.78	2.30	8.20
	(Y*LC/T*8V/T*LV)*C20	FC/MC/PC48C	34.0	3.66	2.72	21.8	2.82	2.27	8.20
	(Y*9C/T*9V)*C16	FC/MC/PC48C	34.2	3.58	2.80	22.0	2.76	2.34	8.20
	(Y*9C/T*9V)*C20	FC/MC/PC48C	34.8	3.60	2.83	22.4	2.74	2.40	8.20
	(Y*9C/T*9V)*D20	FC/MC/PC48D	34.2	3.60	2.78	21.8	2.78	2.30	8.20
	(Y*LC/T*8V/T*LV)*C16	UC48C	34.4	3.72	2.71	21.6	2.78	2.28	8.20
	(Y*LC/T*8V/T*LV)*C20	UC48C	34.4	3.74	2.69	21.6	2.80	2.26	8.20
	(Y*9C/T*9V)*C16	UC48C	34.6	3.68	2.75	21.8	2.76	2.31	8.20
	(Y*9C/T*9V)*C20	UC48C	35.2	3.68	2.80	22.4	2.74	2.40	8.20
	(Y*9C/T*9V)*D20	UC48D	34.6	3.70	2.74	21.8	2.76	2.31	8.20
YHJD42S41S4	T*(8,L)X*C16	FC/MC/PC48C	35.6	3.64	2.87	23.2	2.82	2.41	8.20
	T*(8,L)X*C20	FC/MC/PC48C	36.0	3.66	2.88	23.4	2.82	2.43	8.20
	T*9X*C16	FC/MC/PC48C	36.2	3.58	2.96	23.6	2.76	2.51	8.20
	T*9X*C20	FC/MC/PC48C	36.0	3.62	2.91	23.4	2.80	2.45	8.20
	T*9X*D20	FC/MC/PC48D	36.0	3.66	2.88	23.4	2.82	2.43	8.20
	T*(8,L)X*C16	FC/PC60C	39.5	3.98	2.91	22.2	2.68	2.43	8.20
	T*(8,L)X*C20	FC/PC60C	40.0	4.00	2.93	22.4	2.70	2.43	8.20
	T*9X*C16	FC/PC60C	40.0	3.94	2.97	22.6	2.64	2.51	8.20
	T*9X*C20	FC/PC60C	40.0	3.98	2.94	22.4	2.68	2.45	8.20
	T*9X*D20	FC/MC/PC60D	40.0	4.04	2.90	22.4	2.72	2.41	8.20
	T*(8,L)X*C16	HD60	37.8	3.66	3.03	22.0	2.64	2.44	8.20
	T*(8,L)X*C20	HD60	38.0	3.68	3.03	22.0	2.64	2.44	8.20
	T*9X*C16	HD60	38.0	3.58	3.11	22.2	2.58	2.52	8.20
	T*9X*C20	HD60	38.0	3.62	3.08	22.0	2.60	2.48	8.20
	T*9X*D20	HD60	38.0	3.64	3.06	22.0	2.62	2.46	8.20
	T*(8,L)X*C16	UC60C	39.0	3.94	2.90	22.0	2.68	2.41	8.20
	T*(8,L)X*C20	UC60C	39.5	3.96	2.92	22.4	2.66	2.47	8.20
	T*9X*C16	UC60C	39.5	3.86	3.00	22.2	2.60	2.50	8.20
	T*9X*C20	UC60C	39.5	3.90	2.97	22.2	2.64	2.46	8.20
	T*9X*D20	UC60D	39.5	4.00	2.89	22.4	2.70	2.43	8.20
	(Y*LC/T*8V/T*LV)*C16	FC/MC/PC48C	36.4	3.58	2.98	23.6	2.74	2.52	8.20
	(Y*LC/T*8V/T*LV)*C20	FC/MC/PC48C	36.2	3.58	2.96	23.6	2.76	2.51	8.20
	(Y*9C/T*9V)*C16	FC/MC/PC48C	36.2	3.52	3.01	23.8	2.70	2.58	8.20
	(Y*9C/T*9V)*C20	FC/MC/PC48C	36.4	3.52	3.03	23.8	2.70	2.58	8.20
	(Y*9C/T*9V)*D20	FC/MC/PC48D	36.4	3.56	3.00	23.8	2.74	2.55	8.20
	(Y*LC/T*8V/T*LV)*C16	FC/PC60C	40.0	3.88	3.02	22.4	2.60	2.52	8.20
	(Y*LC/T*8V/T*LV)*C20	FC/PC60C	39.5	3.92	2.95	22.4	2.64	2.49	8.20
	(Y*9C/T*9V)*C16	FC/PC60C	40.0	3.78	3.10	22.8	2.54	2.63	8.20
	(Y*9C/T*9V)*C20	FC/PC60C	40.0	3.82	3.07	22.6	2.56	2.59	8.20
	(Y*9C/T*9V)*D20	FC/MC/PC60D	40.0	3.86	3.04	22.6	2.60	2.55	8.20
	(Y*LC/T*8V/T*LV)*C16	HD60	38.0	3.56	3.13	22.2	2.56	2.54	8.20
	(Y*LC/T*8V/T*LV)*C20	HD60	38.0	3.60	3.09	22.2	2.58	2.52	8.20
	(Y*9C/T*9V)*C16	HD60	38.5	3.48	3.24	22.6	2.48	2.67	8.10
	(Y*9C/T*9V)*C20	HD60	38.5	3.52	3.20	22.4	2.52	2.60	8.15
	(Y*9C/T*9V)*D20	HD60	38.5	3.54	3.19	22.4	2.54	2.58	8.15
	(Y*LC/T*8V/T*LV)*C16	UC60C	39.5	3.84	3.01	22.4	2.58	2.54	8.20

For Notes See Page 19.

HEATING CAPACITY - With High Efficiency Motor Furnaces (Continued)

MODEL	FURNACE MODEL	COIL[1] MODEL	HEATING[2]						
			47 °F			17 °F			HSPF
			MBH	COP	KW	MBH	COP	KW	STD
13 SEER HP WITH HIGH EFFICIENCY MOTOR FURNACES[3]									
YHJD42S41S4	(Y*LC/T*8V/T*LV)*C20	UC60C	39.5	3.88	2.98	22.2	2.62	2.48	8.20
	(Y*9C/T*9V)*C16	UC60C	40.0	3.74	3.13	22.8	2.52	2.65	8.20
	(Y*9C/T*9V)*C20	UC60C	40.0	3.78	3.10	22.6	2.54	2.61	8.20
	(Y*9C/T*9V)*D20	UC60D	39.5	3.82	3.03	22.4	2.58	2.54	8.20
YHJD48S41S4	T*(8,L)X*C16	FC/PC60C	45.5	3.70	3.60	27.0	2.86	2.77	8.20
	T*(8,L)X*C20	FC/PC60C	45.5	3.72	3.58	26.8	2.88	2.73	8.20
	T*9X*C16	FC/PC60C	45.5	3.70	3.60	27.0	2.86	2.77	8.20
	T*9X*C20	FC/PC60C	45.5	3.74	3.56	26.8	2.88	2.73	8.20
	T*9X*D20	FC/MC/PC60D	44.5	3.80	3.43	26.2	2.96	2.59	8.20
	T*(8,L)X*C16	FC/MC62D	45.5	3.66	3.64	26.8	2.86	2.75	8.20
	T*(8,L)X*C20	FC/MC62D	45.0	3.70	3.56	26.8	2.88	2.73	8.20
	T*9X*C16	FC/MC62D	45.5	3.66	3.64	26.8	2.84	2.76	8.20
	T*9X*C20	FC/MC62D	45.0	3.68	3.58	26.8	2.86	2.75	8.20
	T*9X*D20	FC/MC62D	45.5	3.64	3.66	27.0	2.84	2.79	8.20
	T*(8,L)X*C16	UC60C	45.5	3.68	3.62	26.8	2.84	2.76	8.20
	T*(8,L)X*C20	UC60C	44.5	3.82	3.41	26.2	2.96	2.59	8.20
	T*9X*C16	UC60C	45.5	3.66	3.64	26.8	2.84	2.76	8.20
	T*9X*C20	UC60C	45.0	3.70	3.56	26.8	2.86	2.75	8.20
	T*9X*D20	UC60D	44.5	3.76	3.47	26.0	2.94	2.59	8.20
	(Y*LC/T*8V/T*LV)*C16	FC/PC60C	46.0	3.64	3.70	27.2	2.80	2.85	8.20
	(Y*LC/T*8V/T*LV)*C20	FC/PC60C	46.0	3.64	3.70	27.2	2.82	2.83	8.20
	(Y*9C/T*9V)*C16	FC/PC60C	46.0	3.62	3.72	27.4	2.80	2.87	8.20
	(Y*9C/T*9V)*C20	FC/PC60C	46.0	3.62	3.72	27.4	2.80	2.87	8.20
	(Y*9C/T*9V)*D20	FC/MC/PC60D	46.0	3.64	3.70	27.2	2.80	2.85	8.20
	(Y*LC/T*8V/T*LV)*C16	FC/MC62D	45.5	3.64	3.66	27.0	2.84	2.79	8.20
	(Y*LC/T*8V/T*LV)*C20	FC/MC62D	45.5	3.66	3.64	26.8	2.84	2.76	8.20
	(Y*9C/T*9V)*C16	FC/MC62D	45.5	3.60	3.70	27.0	2.80	2.83	8.20
	(Y*9C/T*9V)*C20	FC/MC62D	45.5	3.56	3.74	27.2	2.78	2.87	8.20
	(Y*9C/T*9V)*D20	FC/MC62D	45.5	3.60	3.70	27.2	2.80	2.85	8.20
	(Y*LC/T*8V/T*LV)*C16	UC60C	45.5	3.62	3.68	27.0	2.80	2.83	8.20
	(Y*LC/T*8V/T*LV)*C20	UC60C	45.5	3.68	3.62	26.8	2.84	2.76	8.20
	(Y*9C/T*9V)*C16	UC60C	45.5	3.58	3.72	27.2	2.78	2.87	8.20
	(Y*9C/T*9V)*C20	UC60C	45.5	3.58	3.72	27.2	2.78	2.87	8.20
	(Y*9C/T*9V)*D20	UC60D	45.5	3.60	3.70	27.0	2.78	2.85	8.20
YHJD60S41S4	T*(8,L)X*C20	FC/MC62D	57.0	3.40	4.91	35.8	2.64	3.97	8.20
	T*9X*C20	FC/MC62D	57.0	3.34	5.00	35.8	2.60	4.03	8.20
	T*9X*D20	FC/MC62D	57.0	3.36	4.97	36.0	2.60	4.06	8.20
	T*(8,L)X*C20	FC64D	57.0	3.46	4.83	36.0	2.68	3.94	8.20
	T*9X*C20	FC64D	57.0	3.44	4.85	36.0	2.66	3.97	8.20
	T*9X*D20	FC64D	57.0	3.46	4.83	35.8	2.64	3.97	8.20
	(Y*LC/T*8V/T*LV)*C20	FC/MC62D	57.0	3.32	5.03	36.0	2.60	4.06	8.20
	(Y*9C/T*9V)*C20	FC/MC62D	57.0	3.30	5.06	36.4	2.56	4.17	8.20
	(Y*9C/T*9V)*D20	FC/MC62D	57.0	3.30	5.06	36.2	2.58	4.11	8.20
	(Y*LC/T*8V/T*LV)*C20	FC64D	57.0	3.42	4.88	35.8	2.64	3.97	8.20
	(Y*9C/T*9V)*C20	FC64D	57.0	3.38	4.94	36.4	2.60	4.10	8.20
	(Y*9C/T*9V)*D20	FC64D	57.0	3.40	4.91	36.2	2.60	4.08	8.20

1. Rated CFM same as for cooling.
2. Heating MBH based on AHRI standards of 70 °F DB (Dry Bulb) entering indoor air, 72% RH (Relative Humidity) outdoor air with 25 feet of interconnecting piping and no supplemental electric heat operation.
3. High Efficiency Motor Furnaces have B.O.D (Blower on Delay) standard.

COP equals MBH output divided by (total KW input x 3.412).

HSPF (Heating Seasonal Performance Factor) is the total heating output during a normal annual usage period for heating divided by the total electric power input during the same period.

PSC furnaces, such as the TG8S, TGLS, and TG9S, use Coil Only Ratings.

— = Not Applicable.

ACCESSORIES

Refer to Price Manual for specific model numbers.

Start Assist Kit (S1-2SA067*) - May be required on 24, 30, 36, & 42 models when a TXV is installed. May also be required on 18 & 60 models in low voltage application. The 48 model has factory installed start assist. See Hard Start Kit Accessory Installation Manual for Hard Start Kit part number for each model.

Blower Time Delay - Available to increase efficiency when installed. Installs on indoor section and maintains blower for approximately one minute after cooling thermostat has been satisfied.

Low Temperature Cutout (S1-2LT06700224) - Prevents heat pump operation below -10 °F ambient temperature.

Compressor Blanket - Designed to further reduce the normal operating sound.

TXV Kits - S1-1TVM series thermal expansion valves precisely meter refrigerant for optimum performance over a wide range of conditions. See System Charge table for TXV part number for each model.

Outdoor Thermostat (S1-2TD06700124) - Provides additional staging of supplemental electric heat.

Thermostats - Compatible thermostat controls are available through accessory sourcing. For optimum performance and installation, refer to the UPGNET “Low Voltage Wiring Diagram” document to select and apply controls.

SOUND POWER LEVEL - TYPICAL OCTAVE BAND SPECTRUM (without tone adjustment)

Size	Test Condition	63	125	250	500	1000	2000	4000	8000	dBA	SQI
18	Cooling Mode	67	71	66	69	65	59	58	55	70	19.2
	Heating Mode	68	70	66	68	67	61	60	57	71	19.2
24	Cooling Mode	68	70	67	69	72	65	66	62	75	19.0
	Heating Mode	69	69	63	67	67	64	65	62	72	19.1
30	Cooling Mode	73	70	69	71	72	66	69	63	76	19.2
	Heating Mode	71	73	69	71	73	68	65	62	76	19.1
36	Cooling Mode	72	73	71	72	73	67	66	63	76	19.0
	Heating Mode	70	72	69	70	71	69	65	64	75	19.2
42	Cooling Mode	71	71	73	73	72	67	67	64	77	19.1
	Heating Mode	71	71	71	72	72	69	69	65	77	19.1
48	Cooling Mode	72	71	68	69	66	62	57	53	71	19.1
	Heating Mode	71	73	70	72	70	68	65	63	75	19.1
60	Cooling Mode	68	70	67	69	72	65	66	62	75	19.0
	Heating Mode	69	69	63	67	67	64	65	62	72	19.1

Rated in accordance with ARI Standard 270.

TYPICAL INSTALLATION

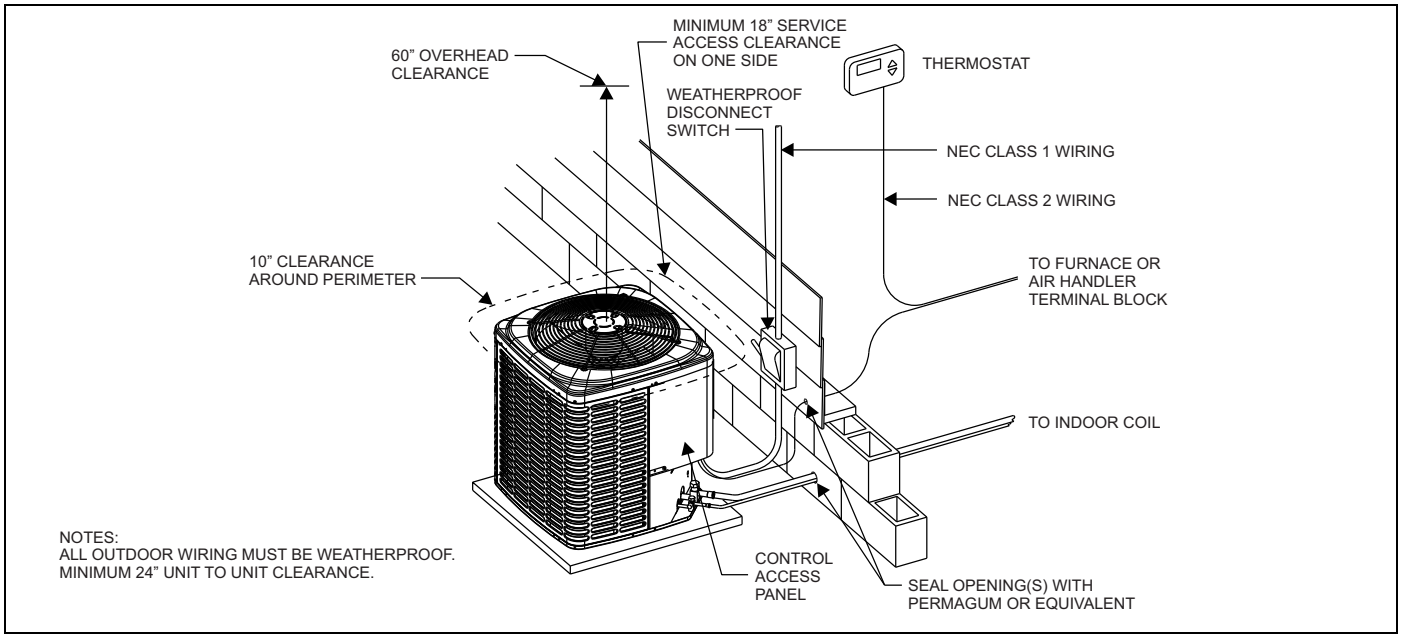

TYPICAL FIELD WIRING

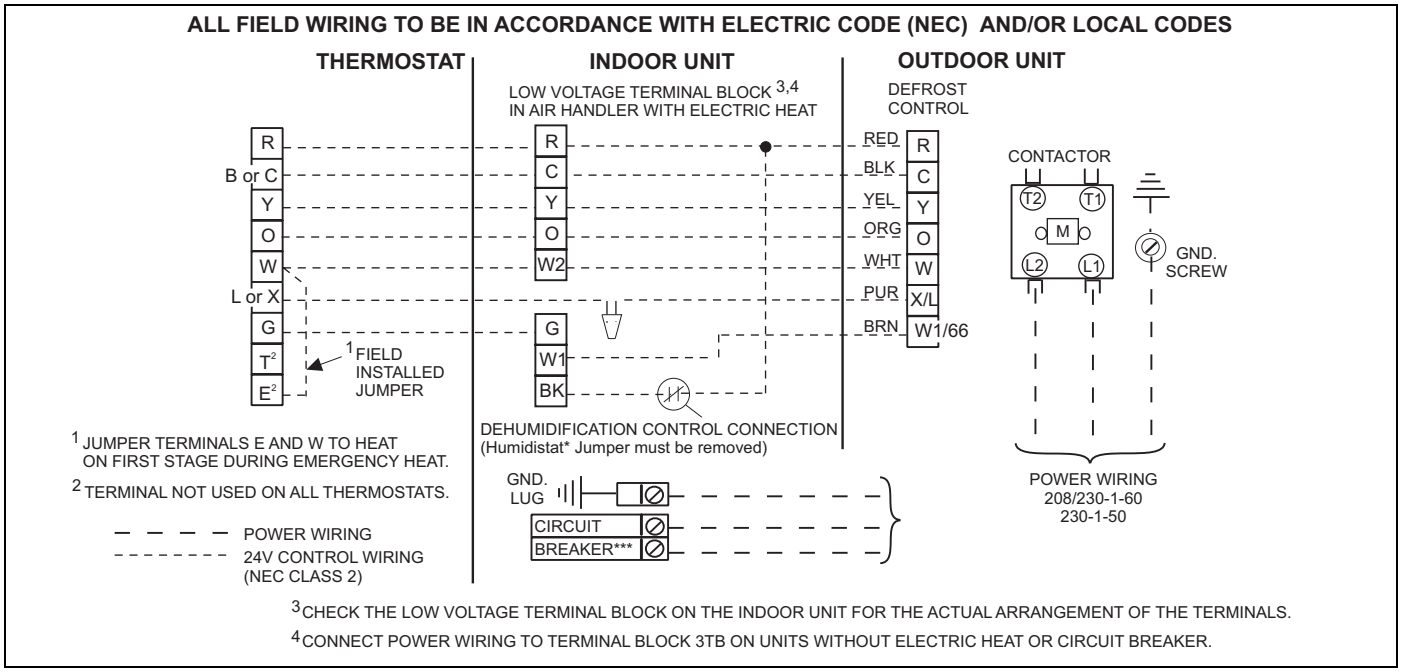

COOLING PERFORMANCE DATA																
CONDENSING UNIT MODEL NO.		**YHJD18S41S2**														
INDOOR COIL MODEL NO.		**FC35**														
CONDENSING ENTERING AIR TEMPERATURE	IDCFM	450					600					750				
	ID DB (°F)	80	80	75	80	80	80	80	75	80	80	80	80	75	80	80
	ID WB (°F)	57	62	62	67	72	57	62	62	67	72	57	62	62	67	72
65	T.C.	16.8	18.5	18.8	20.3	21.7	18.9	19.4	19.9	21.3	22.3	21.0	20.3	20.9	22.2	22.9
	S.C.	16.8	15.4	13.3	13.2	11.1	18.9	18.2	15.6	15.1	12.0	21.0	20.3	17.8	17.0	12.9
	KW	1.0	1.0	1.0	1.0	1.0	1.1	1.1	1.1	1.1	1.1	1.2	1.2	1.2	1.2	1.2
75	T.C.	16.0	17.6	17.6	19.4	20.9	18.0	18.5	18.7	20.3	21.6	20.0	19.5	19.7	21.2	22.2
	S.C.	16.0	14.9	12.8	12.8	10.6	18.0	17.6	15.0	14.7	11.6	20.0	19.5	17.3	16.7	12.6
	KW	1.2	1.2	1.2	1.2	1.2	1.2	1.2	1.2	1.2	1.2	1.3	1.3	1.3	1.3	1.3
85	T.C.	15.2	16.6	16.5	18.5	20.1	17.1	17.7	17.5	19.4	20.8	19.0	18.8	18.5	20.2	21.5
	S.C.	15.2	14.4	12.2	12.4	10.2	17.1	17.0	14.5	14.4	11.2	19.0	18.8	16.7	16.4	12.3
	KW	1.3	1.3	1.3	1.3	1.3	1.4	1.4	1.4	1.4	1.4	1.5	1.5	1.5	1.5	1.5
95	T.C.	14.4	15.6	15.3	17.7	19.3	16.2	16.8	16.3	18.5	20.1	18.0	18.0	17.3	19.2	20.8
	S.C.	14.4	13.9	11.7	11.9	9.7	16.2	16.3	13.9	14.0	10.8	18.0	18.0	16.2	16.1	11.9
	KW	1.4	1.4	1.4	1.4	1.5	1.5	1.5	1.5	1.5	1.5	1.6	1.6	1.6	1.6	1.6
105	T.C.	13.5	14.2	14.1	16.2	18.0	15.2	15.6	15.0	17.0	18.7	16.9	16.9	15.8	17.8	19.4
	S.C.	13.5	13.3	11.1	11.3	9.1	15.2	15.4	13.3	13.4	10.3	16.9	16.9	15.5	15.5	11.5
	KW	1.6	1.6	1.6	1.6	1.6	1.7	1.7	1.7	1.7	1.7	1.8	1.8	1.7	1.8	1.8
115	T.C.	12.5	12.8	12.8	14.8	16.7	14.2	14.3	13.6	15.6	17.4	15.9	15.9	14.4	16.3	18.0
	S.C.	12.5	12.6	10.5	10.7	8.6	14.2	14.3	12.7	12.8	9.8	15.9	15.9	14.4	14.9	11.0
	KW	1.7	1.7	1.7	1.8	1.8	1.8	1.8	1.8	1.8	1.9	1.9	1.9	1.9	1.9	2.0
125	T.C.	11.5	11.4	11.6	13.4	15.5	13.2	13.1	12.2	14.1	16.0	14.8	14.8	12.9	14.9	16.6
	S.C.	11.5	11.4	9.9	10.0	8.0	13.2	13.1	12.1	12.2	9.3	14.8	14.8	12.9	14.4	10.6
	KW	1.9	1.9	1.9	1.9	2.0	2.0	2.0	2.0	2.0	2.0	2.1	2.1	2.1	2.1	2.1

NOTE: ALL CAPACITIES INCLUDE INDOOR FAN HEAT. KW VALUES ARE FOR THE SYSTEM (OUTDOOR + INDOOR).

Multipliers for determining the performance with other indoor sections.

NOTE: For dry bulb temperatures different than those listed (between 73-87 °F), sensible capacity increases by 1060 BTUH per 1000 CFM per degree above the listed temperature and decreases by 1060 BTUH per 1000 CFM per degree below the listed temperature.

Air Handlers	Coils	T.C.	S.C.	KW
–	FC/MC/PC18	0.99	0.99	1.00
–	FC/MC/PC24	1.01	1.01	1.00
–	HD24	1.03	1.02	1.00
AHE18B	–	0.97	0.99	1.01
AHP18	–	1.00	1.00	1.00
AHP24	–	1.00	1.00	1.00
AHR18B	–	0.97	1.01	1.10
AHX18	–	1.03	1.02	1.00
AV*24	–	1.03	1.02	1.00
F4FP024	–	1.00	0.99	1.00
F6FP018	–	1.03	1.02	1.00
F6FP024	–	1.03	1.02	1.00
MX12B	FC/MC18B	0.97	0.98	0.85
MX12B	FC/MC24B	0.97	1.02	1.01
MX12B	FC/MC30B	0.97	1.02	1.01
MV12B	FC/MC18B	1.02	1.01	1.00
MV12B	FC/MC24B	1.04	1.04	1.00

Furnaces	Coils	T.C.	S.C.	KW
T*(8,L)X*A12	FC/MC/PC18A	1.04	1.06	0.94
T*(8,L)X*B12	FC/MC/PC18B	1.04	1.06	0.94
T*9X*B12	FC/MC/PC18B	1.04	1.06	0.94
T*(8,L)X*A12	FC/MC/PC24A	1.06	1.08	0.92
T*(8,L)X*B12	FC/MC/PC24B	1.06	1.08	0.92
T*9X*B12	FC/MC/PC24B	1.06	1.08	0.92

Furnaces	Coils	T.C.	S.C.	KW
T*(8,L)X*A12	FC/MC/PC30A	1.06	1.08	0.92
T*(8,L)X*B12	FC/MC/PC30B	1.06	1.08	0.92
T*9X*B12	FC/MC/PC18A	1.06	1.08	0.92
(Y*LC/T*8V/T*LV)*A12	FC/MC/PC18A	1.03	1.05	0.93
(Y*LC/T*8V/T*LV)*B12	FC/MC/PC18B	1.02	1.01	0.92
(Y*9C/T*9V)*B12	FC/MC/PC18B	1.03	1.04	0.92
(Y*LC/T*8V/T*LV)*A12	FC/MC/PC24A	1.06	1.08	0.94
(Y*LC/T*8V/T*LV)*B12	FC/MC/PC24B	1.04	1.04	0.92
(Y*9C/T*9V)*B12	FC/MC/PC24B	1.06	1.08	0.93
(Y*LC/T*8V/T*LV)*A12	FC/MC/PC30A	1.06	1.08	0.94
(Y*LC/T*8V/T*LV)*B12	FC/MC/PC30B	1.04	1.04	0.92
(Y*9C/T*9V)*B12	FC/MC/PC30B	1.06	1.08	0.93
(Y*LC/T*8V/T*LV)*A12	HD24	1.06	1.08	0.94
(Y*LC/T*8V/T*LV)*B12	HD24	1.05	1.04	0.92
(Y*9C/T*9V)*B12	HD24	1.06	1.08	0.93
(Y*LC/T*8V/T*LV)*A12	UC18A	1.04	1.05	0.93
(Y*LC/T*8V/T*LV)*B12	UC18B	1.03	1.03	0.92
(Y*9C/T*9V)*B12	UC18B	1.04	1.05	0.92
(Y*LC/T*8V/T*LV)*A12	UC24A	1.06	1.09	0.94
(Y*LC/T*8V/T*LV)*B12	UC24B	1.05	1.05	0.92
(Y*9C/T*9V)*B12	UC24B	1.06	1.09	0.93
(Y*LC/T*8V/T*LV)*A12	UC30A	1.06	1.09	0.94
(Y*LC/T*8V/T*LV)*B12	UC30B	1.05	1.05	0.92
(Y*9C/T*9V)*B12	UC30B	1.06	1.09	0.93

COOLING PERFORMANCE DATA

CONDENSING UNIT MODEL NO.	YHJD24S41S4														
INDOOR COIL MODEL NO.	AHP30														
CONDENSING ENTERING AIR TEMPERATURE	IDCFM	600					800					1000				
	ID DB (°F)	80	80	75	80	80	80	80	75	80	80	80	80	75	80	80
	ID WB (°F)	57	62	62	67	72	57	62	62	67	72	57	62	62	67	72
65	T.C.	22.6	25.9	25.9	28.3	29.4	25.2	27.1	26.8	29.2	30.4	27.9	28.3	27.6	30.0	31.4
	S.C.	22.6	20.9	18.1	18.1	15.5	25.2	23.9	19.7	19.5	16.1	27.9	26.9	21.3	20.9	16.6
	KW	1.6	1.6	1.6	1.7	1.7	1.7	1.7	1.7	1.7	1.7	1.8	1.8	1.8	1.8	1.8
75	T.C.	21.5	24.1	24.2	26.6	28.1	23.9	25.3	25.1	27.5	29.0	26.3	26.4	26.0	28.5	29.9
	S.C.	21.5	20.1	17.3	17.3	14.7	23.9	22.8	19.1	18.9	15.4	26.3	25.6	20.9	20.6	16.1
	KW	1.7	1.8	1.8	1.8	1.8	1.8	1.9	1.8	1.9	1.9	1.9	1.9	1.9	2.0	2.0
85	T.C.	20.4	22.3	22.4	24.8	26.8	22.6	23.4	23.4	25.9	27.6	24.7	24.5	24.4	26.9	28.4
	S.C.	20.4	19.4	16.5	16.4	13.8	22.6	21.8	18.6	18.4	14.7	24.7	24.3	20.6	20.3	15.6
	KW	1.9	1.9	1.9	1.9	1.9	2.0	2.0	2.0	2.0	2.0	2.1	2.1	2.1	2.1	2.1
95	T.C.	19.4	20.6	20.6	23.0	25.5	21.2	21.6	21.7	24.2	26.2	23.1	22.6	22.7	25.4	26.9
	S.C.	19.4	18.6	15.7	15.6	13.0	21.2	20.8	18.0	17.8	14.0	23.1	22.6	20.2	20.0	15.1
	KW	2.0	2.0	2.0	2.0	2.1	2.1	2.1	2.1	2.1	2.2	2.2	2.2	2.2	2.3	2.3
105	T.C.	17.6	18.0	18.0	20.9	23.5	19.4	19.5	18.9	21.9	24.3	21.3	21.0	19.9	23.0	25.1
	S.C.	17.6	17.2	14.5	14.7	12.0	19.4	19.3	16.7	16.9	13.2	21.3	21.0	18.8	19.1	14.4
	KW	2.1	2.1	2.1	2.2	2.2	2.2	2.2	2.2	2.3	2.3	2.3	2.3	2.3	2.4	2.4
115	T.C.	15.8	15.5	15.4	18.8	21.5	17.6	17.5	16.2	19.7	22.4	19.5	19.5	17.0	20.6	23.3
	S.C.	15.8	15.5	13.3	13.9	11.1	17.6	17.5	15.3	16.0	12.4	19.5	19.5	17.0	18.2	13.7
	KW	2.2	2.2	2.2	2.3	2.4	2.3	2.3	2.3	2.4	2.5	2.5	2.5	2.4	2.5	2.6
125	T.C.	13.9	13.0	12.7	16.6	19.5	15.8	15.5	13.4	17.4	20.5	17.7	17.9	14.1	18.2	21.5
	S.C.	13.9	13.0	12.1	13.0	10.1	15.8	15.5	13.4	15.2	11.5	17.7	17.9	14.1	17.3	13.0
	KW	2.3	2.2	2.2	2.4	2.5	2.4	2.4	2.4	2.5	2.6	2.6	2.6	2.5	2.6	2.7

NOTE: ALL CAPACITIES INCLUDE INDOOR FAN HEAT. KW VALUES ARE FOR THE SYSTEM (OUTDOOR + INDOOR).

Multipliers for determining the performance with other indoor sections.

NOTE: For dry bulb temperatures different than those listed (between 73-87 °F), sensible capacity increases by 1060 BTUH per 1000 CFM per degree above the listed temperature and decreases by 1060 BTUH per 1000 CFM per degree below the listed temperature.

Air Handlers	Coils	T.C.	S.C.	KW
–	FC/MC/PC32	1.00	1.00	1.04
–	FC/MC/PC35	0.99	1.00	1.03
–	FC/MC/PC37	1.01	1.01	1.05
–	FC/MC/PC43	1.01	1.01	1.05
AHE24B	–	0.98	0.99	0.93
AHE30B	–	0.98	0.99	0.93
AHR24B	–	0.98	0.96	1.02
AHR30B	–	0.98	0.96	1.02
AHX30	–	1.01	1.02	0.96
AHX36	–	1.01	1.02	0.96
AV*36	–	1.01	0.99	0.96
F4FP040	–	1.00	1.00	1.04
F6FP030	–	1.01	1.03	0.96
F6FP036	–	1.01	1.03	0.96
MV12B	FC/MC35B	1.01	1.02	0.96
MV12B	FC/MC43B	1.01	1.01	0.96
MX12B	FC/MC35B	0.98	1.00	0.93
MX12B	FC/MC43B	0.98	0.97	0.93

Furnaces	Coils	T.C.	S.C.	KW
T*(8,L)X*A12	FC/MC/PC32A	1.01	1.02	0.96
T*(8,L)X*B12	FC/MC/PC35B	1.01	1.03	0.96
T*(8,L)X*C16	FC/MC/PC35C	1.01	1.03	0.96
T*(8,L)X*C20	FC/MC/PC35C	1.01	1.03	0.96

Furnaces	Coils	T.C.	S.C.	KW
T*9X*B12	FC/MC/PC35B	1.01	1.02	0.96
T*9X*C16	FC/MC/PC35C	1.01	1.01	0.96
T*9X*C20	FC/MC/PC35C	1.01	1.03	0.96
T*(8,L)X*A12	FC/MC/PC37A	1.01	1.04	0.96
T*(8,L)X*B12	FC/MC/PC43B	1.01	1.05	0.96
T*(8,L)X*C16	FC/MC/PC43C	1.01	1.05	0.96
T*(8,L)X*C20	FC/MC/PC43C	1.01	1.01	0.96
T*9X*B12	FC/MC/PC43B	1.01	1.01	0.96
T*9X*C16	FC/MC/PC43C	1.01	1.01	0.96
T*9X*C20	FC/MC/PC43C	1.01	1.01	0.96
(Y*LC/T*8V/T*LV)*A12	FC/MC/PC32A	1.01	1.01	0.96
(Y*LC/T*8V/T*LV)*B12	FC/MC/PC35B	1.01	1.01	0.96
(Y*LC/T*8V/T*LV)*C16	FC/MC/PC35C	1.01	1.03	0.96
(Y*LC/T*8V/T*LV)*C20	FC/MC/PC35C	1.01	0.99	0.96
(Y*9C/T*9V)*B12	FC/MC/PC35B	1.01	1.03	0.96
(Y*9C/T*9V)*C16	FC/MC/PC35C	1.01	1.06	0.96
(Y*9C/T*9V)*C20	FC/MC/PC35C	1.01	1.01	0.96
(Y*LC/T*8V/T*LV)*A12	FC/MC/PC37A	1.01	1.01	0.96
(Y*LC/T*8V/T*LV)*B12	FC/MC/PC43B	1.01	1.01	0.96
(Y*LC/T*8V/T*LV)*C16	FC/MC/PC43C	1.01	1.06	0.96
(Y*LC/T*8V/T*LV)*C20	FC/MC/PC43C	1.01	1.01	0.96
(Y*9C/T*9V)*B12	FC/MC/PC43B	1.01	1.01	0.96
(Y*9C/T*9V)*C16	FC/MC/PC43C	1.01	1.01	0.96
(Y*9C/T*9V)*C20	FC/MC/PC43C	1.01	1.06	0.96

COOLING PERFORMANCE DATA																
CONDENSING UNIT MODEL NO.		**YHJD30S41S4**														
INDOOR COIL MODEL NO.		**AHP30**														
CONDENSING ENTERING AIR TEMPERATURE	IDCFM	800					1000					1200				
	ID DB (°F)	80	80	75	80	80	80	80	75	80	80	80	80	75	80	80
	ID WB (°F)	57	62	62	67	72	57	62	62	67	72	57	62	62	67	72
65	T.C.	29.1	31.3	31.4	34.3	36.1	31.0	32.7	32.8	35.2	36.6	33.0	34.1	34.1	36.1	37.2
	S.C.	28.0	24.7	21.2	21.0	17.8	29.9	27.9	23.3	22.4	18.2	31.8	31.1	25.4	23.8	18.6
	KW	2.0	2.0	2.0	2.1	2.0	2.1	2.1	2.1	2.1	2.1	2.2	2.2	2.2	2.2	2.2
75	T.C.	27.4	29.1	29.2	32.3	34.3	29.3	30.4	30.4	33.2	34.9	31.3	31.6	31.6	34.0	35.5
	S.C.	26.4	23.7	20.2	20.1	16.8	28.3	26.5	22.3	21.7	17.4	30.2	29.3	24.4	23.3	18.0
	KW	2.1	2.2	2.2	2.2	2.2	2.2	2.3	2.3	2.3	2.3	2.3	2.4	2.3	2.3	2.3
85	T.C.	25.7	26.9	27.0	30.3	32.5	27.6	28.0	28.0	31.1	33.2	29.6	29.1	29.1	31.9	33.9
	S.C.	24.8	22.7	19.2	19.3	15.8	26.6	25.1	21.3	21.0	16.6	28.5	27.5	23.3	22.7	17.3
	KW	2.2	2.3	2.3	2.3	2.4	2.4	2.4	2.4	2.4	2.5	2.5	2.5	2.5	2.5	2.5
95	T.C.	24.0	24.7	24.7	28.2	30.8	25.9	25.7	25.7	29.1	31.5	27.8	26.7	26.6	29.9	32.2
	S.C.	23.1	21.8	18.2	18.4	14.8	25.0	23.7	20.2	20.3	15.8	26.8	25.7	22.3	22.1	16.7
	KW	2.4	2.4	2.4	2.5	2.5	2.5	2.5	2.5	2.6	2.6	2.6	2.6	2.6	2.7	2.7
105	T.C.	21.8	22.2	21.8	25.3	28.3	23.6	23.5	22.6	26.1	29.0	25.4	24.8	23.4	26.9	29.7
	S.C.	21.0	20.4	17.0	17.3	13.8	22.8	22.2	18.9	19.2	14.8	24.5	24.0	20.9	21.1	15.8
	KW	2.5	2.5	2.5	2.6	2.7	2.7	2.7	2.6	2.7	2.8	2.8	2.8	2.7	2.8	2.9
115	T.C.	19.7	19.6	19.0	22.3	25.8	21.4	21.3	19.6	23.2	26.5	23.0	23.0	20.2	24.0	27.1
	S.C.	19.0	18.9	15.8	16.1	12.7	20.6	20.6	17.6	18.0	13.8	22.2	22.2	19.5	20.0	14.9
	KW	2.7	2.7	2.7	2.7	2.8	2.8	2.8	2.8	2.9	2.9	2.9	2.9	2.9	3.0	3.1
125	T.C.	17.5	17.1	16.1	19.4	23.4	19.1	19.1	16.5	20.3	24.0	20.7	21.2	16.9	21.1	24.6
	S.C.	16.9	17.1	14.6	14.9	11.7	18.4	19.0	16.3	16.9	12.8	19.9	20.4	16.9	18.9	13.9
	KW	2.8	2.8	2.8	2.9	2.9	2.9	2.9	2.9	3.0	3.1	3.1	3.1	3.0	3.1	3.3
NOTE: ALL CAPACITIES INCLUDE INDOOR FAN HEAT. KW VALUES ARE FOR THE SYSTEM (OUTDOOR + INDOOR).																

Multipliers for determining the performance with other indoor sections.

NOTE: For dry bulb temperatures different than those listed (between 73-87 °F), sensible capacity increases by 1060 BTUH per 1000 CFM per degree above the listed temperature and decreases by 1060 BTUH per 1000 CFM per degree below the listed temperature.

Air Handlers	Coils	T.C.	S.C.	KW
–	FC/MC/PC32	0.99	0.98	1.02
–	FC/MC/PC35	0.99	0.98	1.02
–	FC/MC/PC37	1.00	1.00	1.02
–	FC/MC/PC43	1.00	1.00	1.02
AHE30B	–	1.00	0.97	0.94
AHE36C	–	1.02	1.01	0.96
AHP36	–	1.00	1.00	1.02
AHR30B	–	1.00	1.01	1.02
AHR36C	–	1.01	1.00	1.04
AHX30	–	1.00	1.02	0.94
AHX36	–	1.00	1.01	0.94
AV*36	–	1.00	1.01	0.94
F4FP040	–	0.99	0.98	1.02
F6FP030	–	1.00	0.99	0.98
F6FP036	–	1.00	0.99	0.94
MV12B	FC/MC35B	1.00	0.99	0.94
MV12B	FC/MC43B	1.00	1.00	0.94
MV16C	FC/MC35C	1.00	1.04	0.94
MV16C	FC/MC43C	1.00	1.00	0.94
MX12B	FC/MC35B	1.01	1.03	0.95
MX16C	FC/MC35C	1.03	1.03	0.96
MX12B	FC/MC43B	1.03	1.05	0.97
MX16C	FC/MC43C	1.01	1.00	0.95

Furnaces	Coils	T.C.	S.C	KW
T*(8,L)X*A12	FC/MC/PC32A	1.00	0.99	0.94
T*(8,L)X*B12	FC/MC/PC35B	1.00	1.05	0.94
T*(8,L)X*C16	FC/MC/PC35C	1.00	1.05	0.94
T*(8,L)X*C20	FC/MC/PC35C	0.99	0.96	0.93
T*9X*B12	FC/MC/PC35B	1.00	1.04	0.94
T*9X*C16	FC/MC/PC35C	1.00	1.04	0.94
T*9X*C20	FC/MC/PC35C	0.99	0.95	0.93
T*(8,L)X*A12	FC/MC/PC37A	1.00	1.05	0.94
T*(8,L)X*B12	FC/MC/PC43B	1.00	1.05	0.94
T*(8,L)X*C16	FC/MC/PC43C	1.00	1.00	0.94
T*(8,L)X*C20	FC/MC/PC43C	1.00	0.97	0.94
T*9X*B12	FC/MC/PC43B	1.00	1.05	0.94
T*9X*C16	FC/MC/PC43C	1.00	1.03	0.94
T*9X*C20	FC/MC/PC43C	0.97	0.90	0.91
(Y*LC/T*8V/T*LV)*A12	FC/MC/PC32A	1.00	0.99	1.02
(Y*LC/T*8V/T*LV)*B12	FC/MC/PC35B	1.00	0.99	0.94
(Y*LC/T*8V/T*LV)*C16	FC/MC/PC35C	1.00	0.99	0.94
(Y*LC/T*8V/T*LV)*C20	FC/MC/PC35C	1.00	1.04	0.94
(Y*9C/T*9V)*B12	FC/MC/PC35B	1.00	0.99	0.98
(Y*9C/T*9V)*C16	FC/MC/PC35C	1.00	0.99	0.94
(Y*9C/T*9V)*C20	FC/MC/PC35C	1.00	0.99	0.94
(Y*LC/T*8V/T*LV)*A12	FC/MC/PC37A	1.00	0.99	0.94
(Y*LC/T*8V/T*LV)*B12	FC/MC/PC43B	1.00	1.03	0.94
(Y*LC/T*8V/T*LV)*C16	FC/MC/PC43C	1.00	1.00	0.94
(Y*LC/T*8V/T*LV)*C20	FC/MC/PC43C	1.00	1.00	0.94
(Y*9C/T*9V)*B12	FC/MC/PC43B	1.00	1.00	0.94
(Y*9C/T*9V)*C16	FC/MC/PC43C	1.00	1.00	0.94
(Y*9C/T*9V)*C20	FC/MC/PC43C	1.00	1.00	0.94

COOLING PERFORMANCE DATA																
CONDENSING UNIT MODEL NO.		YHJD36S41S4														
INDOOR COIL MODEL NO.		AHP36														
CONDENSING ENTERING AIR TEMPERATURE	IDCFM	1000					1200					1400				
	ID DB (°F)	80	80	75	80	80	80	80	75	80	80	80	80	75	80	80
	ID WB (°F)	57	62	62	67	72	57	62	62	67	72	57	62	62	67	72
65	T.C.	35.0	39.8	39.9	42.7	45.2	37.7	40.6	41.0	43.5	45.7	40.5	41.5	42.0	44.4	46.1
	S.C.	34.9	32.4	27.9	27.1	22.7	37.7	35.4	29.9	28.6	23.2	40.4	38.5	31.8	30.2	23.8
	KW	2.4	2.4	2.4	2.5	2.5	2.5	2.5	2.5	2.5	2.5	2.6	2.6	2.6	2.6	2.6
75	T.C.	33.3	36.8	36.9	39.9	42.9	35.7	37.6	37.9	40.8	43.4	38.1	38.5	38.9	41.8	43.9
	S.C.	33.2	31.1	26.5	25.9	21.5	35.7	33.7	28.5	27.6	22.2	38.1	36.4	30.5	29.4	22.9
	KW	2.6	2.6	2.6	2.7	2.7	2.7	2.7	2.7	2.7	2.8	2.8	2.8	2.8	2.8	2.8
85	T.C.	31.6	33.8	33.9	37.1	40.6	33.7	34.6	34.8	38.2	41.2	35.8	35.5	35.7	39.2	41.8
	S.C.	31.5	29.7	25.1	24.8	20.2	33.6	32.1	27.2	26.7	21.1	35.7	34.4	29.2	28.5	22.0
	KW	2.8	2.8	2.8	2.9	2.9	2.9	2.9	2.9	2.9	3.0	3.0	3.0	3.0	3.0	3.1
95	T.C.	29.9	30.8	30.8	34.3	38.4	31.7	31.6	31.7	35.5	39.0	33.5	32.5	32.6	36.6	39.6
	S.C.	29.8	28.4	23.7	23.6	19.0	31.6	30.4	25.8	25.7	20.1	33.4	32.4	27.9	27.7	21.1
	KW	2.9	2.9	3.0	3.1	3.1	3.0	3.1	3.1	3.1	3.2	3.2	3.2	3.2	3.2	3.3
105	T.C.	26.3	26.7	27.4	31.4	35.3	28.6	28.5	28.1	32.4	35.9	30.9	30.4	28.8	33.3	36.5
	S.C.	26.3	25.5	22.3	22.4	17.8	28.6	27.9	24.3	24.5	18.9	30.9	30.4	26.3	26.5	20.0
	KW	3.1	3.1	3.1	3.2	3.3	3.2	3.2	3.2	3.3	3.4	3.3	3.3	3.3	3.4	3.5
115	T.C.	22.8	22.6	24.1	28.5	32.2	25.6	25.5	24.5	29.2	32.8	28.4	28.4	25.0	30.0	33.5
	S.C.	22.8	22.5	20.8	21.3	16.6	25.5	25.4	22.8	23.3	17.8	28.3	28.3	24.8	25.3	18.9
	KW	3.2	3.2	3.2	3.4	3.5	3.4	3.4	3.3	3.5	3.6	3.5	3.5	3.4	3.6	3.6
125	T.C.	19.3	18.4	20.7	25.6	29.1	22.5	22.4	20.9	26.1	29.8	25.8	26.4	21.2	26.7	30.4
	S.C.	19.2	18.4	19.3	20.1	15.4	22.5	22.4	20.9	22.1	16.6	25.8	26.3	21.2	24.0	17.8
	KW	3.4	3.4	3.3	3.5	3.7	3.6	3.5	3.5	3.6	3.7	3.7	3.7	3.6	3.8	3.8
NOTE: ALL CAPACITIES INCLUDE INDOOR FAN HEAT. KW VALUES ARE FOR THE SYSTEM (OUTDOOR + INDOOR).																

Multipliers for determining the performance with other indoor sections.

NOTE: For dry bulb temperatures different than those listed (between 73-87 °F), sensible capacity increases by 1060 BTUH per 1000 CFM per degree above the listed temperature and decreases by 1060 BTUH per 1000 CFM per degree below the listed temperature.

Air Handlers	Coils	T.C.	S.C.	KW
–	FC/MC/PC37	1.00	1.01	1.04
–	FC/MC/PC43	1.00	1.00	1.04
–	FC/MC/PC48	1.00	1.00	1.04
–	HD48	1.00	0.99	1.04
–	UC48	1.00	1.01	1.04
AHE36C	–	0.98	0.99	0.94
AHE42D	–	0.98	0.99	0.94
AHP42	–	1.00	1.02	1.04
AHR36B	–	0.98	1.00	1.02
AHR42C	–	0.98	0.99	1.02
AHX36	–	1.00	1.01	0.95
AHX42	–	1.00	1.01	0.95

Air Handlers	Coils	T.C.	S.C.	KW
AV*36	–	1.00	1.01	0.95
F5FP048	–	1.00	1.02	0.95
F6FP042	–	1.00	1.04	0.95
MX12B	FC/MC43B	0.98	1.00	0.94
MX16C	FC/MC43C	0.98	0.98	0.94
MX12D	FC/MC48D	0.98	0.99	0.94
MX16C	FC/MC48C	0.98	0.99	0.94
MV12B	FC/MC43B	1.00	1.02	0.95
MV12D	FC/MC48D	1.00	1.00	0.95
MV16C	FC/MC43C	1.00	1.01	0.95
MV16C	FC/MC48C	1.00	1.00	0.95

Continued on next page.

Furnaces	Coils	T.C.	S.C.	KW
T*(8,L)X*A12	FC/MC/PC37A	1.00	1.04	0.95
T*(8,L)X*B12	FC/MC/PC43B	1.00	1.04	0.95
T*(8,L)X*C16	FC/MC/PC43C	1.00	1.01	0.95
T*(8,L)X*C20	FC/MC/PC43C	1.00	1.03	0.95
T*9X*B12	FC/MC/PC43B	1.00	1.03	0.95
T*9X*C16	FC/MC/PC43C	1.00	1.03	0.95
T*9X*C20	FC/MC/PC43C	1.00	1.01	0.95
T*(8,L)X*C16	FC/MC/PC48C	1.00	1.00	0.95
T*(8,L)X*C20	FC/MC/PC48C	1.00	1.02	0.95
T*9X*C16	FC/MC/PC48C	1.00	1.02	0.95
T*9X*C20	FC/MC/PC48C	1.00	1.00	0.95
T*9X*D20	FC/MC/PC48D	1.00	1.00	0.95
T*(8,L)X*C16	UC48C	1.00	1.01	0.95
T*(8,L)X*C20	UC48C	1.00	1.03	0.95
T*9X*C16	UC48C	1.00	1.03	0.95
T*9X*C20	UC48C	1.00	1.01	0.95
T*9X*D20	UC48D	1.00	1.01	0.95

Furnaces	Coils	T.C.	S.C.	KW
(Y*LC/T*8V/T*LV)*B12	FC/MC/PC43B	1.00	1.02	1.00
(Y*LC/T*8V/T*LV)*C16	FC/MC/PC43C	1.00	1.01	0.95
(Y*LC/T*8V/T*LV)*C20	FC/MC/PC43C	1.00	1.01	0.95
(Y*9C/T*9V)*B12	FC/MC/PC43B	1.00	1.01	1.00
(Y*9C/T*9V)*C16	FC/MC/PC43C	1.00	1.02	0.95
(Y*9C/T*9V)*C20	FC/MC/PC43C	1.00	1.01	0.95
(Y*LC/T*8V/T*LV)*A12	FC/MC/PC37A	1.00	0.99	1.00
(Y*LC/T*8V/T*LV)*C16	FC/MC/PC48C	1.00	1.00	0.95
(Y*LC/T*8V/T*LV)*C20	FC/MC/PC48C	1.00	1.00	0.95
(Y*9C/T*9V)*C16	FC/MC/PC48C	1.00	1.00	0.95
(Y*9C/T*9V)*C20	FC/MC/PC48C	1.00	1.04	0.95
(Y*9C/T*9V)*D20	FC/MC/PC48D	1.00	1.00	0.95
(Y*LC/T*8V/T*LV)*C16	UC48C	1.00	1.01	0.95
(Y*LC/T*8V/T*LV)*C20	UC48C	1.00	1.01	0.95
(Y*9C/T*9V)*C16	UC48C	1.00	1.01	0.95
(Y*9C/T*9V)*C20	UC48C	1.00	1.05	0.95
(Y*9C/T*9V)*D20	UC48D	1.00	1.01	0.95

COOLING PERFORMANCE DATA																
CONDENSING UNIT MODEL NO.		**YHJD42S41S4**														
INDOOR COIL MODEL NO.		**AHP48**														
CONDENSING ENTERING AIR TEMPERATURE	IDCFM	1200					1400					1600				
	ID DB (°F)	80	80	75	80	80	80	80	75	80	80	80	80	75	80	80
	ID WB (°F)	57	62	62	67	72	57	62	62	67	72	57	62	62	67	72
65	T.C.	42.5	44.2	45.0	49.4	52.7	44.4	45.8	46.4	50.5	53.5	46.4	47.4	47.7	51.5	54.4
	S.C.	42.5	38.4	32.9	32.8	26.7	44.4	42.2	35.3	34.7	27.6	46.4	46.0	37.6	36.7	28.6
	KW	2.7	2.8	2.8	2.8	2.9	2.8	2.8	2.9	2.9	2.9	2.9	2.9	2.9	3.0	3.0
75	T.C.	39.9	40.7	41.7	46.3	49.8	41.8	42.3	42.9	47.2	50.6	43.7	43.9	44.1	48.1	51.3
	S.C.	39.9	36.8	31.4	31.4	25.4	41.8	40.0	33.7	33.3	26.4	43.7	43.2	36.0	35.3	27.4
	KW	2.9	2.9	2.9	3.0	3.1	3.0	3.0	3.0	3.1	3.1	3.1	3.1	3.1	3.2	3.2
85	T.C.	37.4	37.3	38.4	43.2	47.0	39.2	38.8	39.5	44.0	47.6	41.0	40.4	40.6	44.8	48.3
	S.C.	37.4	35.1	29.8	29.9	24.1	39.2	37.8	32.1	32.0	25.1	41.0	40.4	34.4	34.0	26.1
	KW	3.1	3.1	3.1	3.2	3.3	3.2	3.2	3.2	3.3	3.3	3.3	3.3	3.3	3.4	3.4
95	T.C.	34.8	33.9	35.0	40.1	44.1	36.6	35.4	36.0	40.7	44.7	38.3	36.8	37.0	41.4	45.3
	S.C.	34.8	33.4	28.3	28.5	22.8	36.6	35.4	30.6	30.6	23.8	38.3	36.8	32.8	32.6	24.8
	KW	3.3	3.3	3.3	3.4	3.5	3.4	3.4	3.4	3.5	3.5	3.5	3.5	3.5	3.6	3.6
105	T.C.	31.6	31.2	30.9	36.1	40.5	33.4	32.8	31.7	37.1	41.2	35.3	34.5	32.6	38.0	42.0
	S.C.	31.6	31.2	26.5	26.9	21.3	33.4	32.8	28.6	29.1	22.4	35.3	34.5	30.8	31.3	23.6
	KW	3.5	3.5	3.5	3.6	3.7	3.6	3.6	3.6	3.7	3.8	3.8	3.7	3.7	3.8	3.9
115	T.C.	28.3	28.5	26.7	32.1	36.9	30.3	30.3	27.4	33.4	37.8	32.2	32.1	28.1	34.7	38.6
	S.C.	28.3	28.5	24.6	25.3	19.7	30.3	30.3	26.7	27.6	21.0	32.2	32.1	28.1	29.9	22.4
	KW	3.7	3.7	3.6	3.8	3.9	3.8	3.8	3.7	3.9	4.0	4.0	4.0	3.8	4.0	4.1
125	T.C.	25.1	25.8	22.6	28.1	33.3	27.1	27.8	23.1	29.7	34.3	29.1	29.7	23.7	31.3	35.3
	S.C.	25.1	25.8	22.6	23.6	18.1	27.1	27.8	23.1	26.1	19.6	29.1	29.7	23.7	28.6	21.2
	KW	3.9	3.9	3.8	4.0	4.2	4.0	4.0	3.9	4.1	4.3	4.2	4.2	4.0	4.2	4.4
NOTE: ALL CAPACITIES INCLUDE INDOOR FAN HEAT. KW VALUES ARE FOR THE SYSTEM (OUTDOOR + INDOOR).																

Multipliers for determining the performance with other indoor sections.

NOTE: For dry bulb temperatures different than those listed (between 73-87 °F), sensible capacity increases by 1060 BTUH per 1000 CFM per degree above the listed temperature and decreases by 1060 BTUH per 1000 CFM per degree below the listed temperature.

Air Handlers	Coils	T.C.	S.C.	KW
–	FC/MC/PC60	1.00	1.03	1.05
–	HD60	1.00	1.01	1.05
–	UC60	0.99	1.00	1.04
AHE48D	–	1.01	1.03	1.02
AHP60	–	1.02	1.05	0.95
AHR48D	–	0.98	0.96	1.02
AHX42	–	0.99	1.05	0.95
AHX48	–	1.02	1.06	0.99
AV*48	–	1.02	1.05	0.99
AV*60	–	1.02	1.05	0.99
F4FP045	–	1.00	1.03	1.05
F4FV060	–	0.99	0.99	0.98

Air Handlers	Coils	T.C.	S.C.	KW
F5FP060	–	1.02	1.07	0.99
F6FP048	–	1.02	1.05	0.99
MX16C	FC/MC48C	1.01	1.02	0.97
MX20D	FC/MC48D	1.01	1.02	0.97
MX16C	FC60C	1.02	1.05	0.99
MX20D	FC/MC60D	1.02	1.05	0.99
MV16C	FC/MC48C	1.02	1.02	0.95
MV16C	FC60C	1.01	1.05	0.97
MV20D	FC/MC48D	1.03	1.04	0.93
MV20D	FC/MC60D	1.02	1.05	0.99

Continued on next page.

Furnaces	Coils	T.C.	S.C.	KW
T*(8,L)X*C16	FC/MC/PC48C	1.02	1.02	0.92
T*(8,L)X*C20	FC/MC/PC48C	1.03	1.05	0.94
T*9X*C16	FC/MC/PC48C	1.02	1.03	0.95
T*9X*C20	FC/MC/PC48C	1.02	1.03	0.94
T*9X*D20	FC/MC/PC48D	1.02	1.04	0.94
T*(8,L)X*C16	FC/PC60C	1.02	1.05	0.99
T*(8,L)X*C20	FC/PC60C	1.02	1.08	0.99
T*9X*C16	FC/PC60C	1.02	1.07	0.99
T*9X*C20	FC/PC60C	1.02	1.07	0.99
T*9X*D20	FC/MC/PC60D	1.02	1.08	0.99
T*(8,L)X*C16	HD60	1.01	1.04	0.97
T*(8,L)X*C20	HD60	1.02	1.05	0.99
T*9X*C16	HD60	1.01	1.03	0.97
T*9X*C20	HD60	1.02	1.03	0.99
T*9X*D20	HD60	1.02	1.03	0.99
T*(8,L)X*C16	UC60C	1.01	1.02	0.97
T*(8,L)X*C20	UC60C	1.01	1.06	0.97
T*9X*C16	UC60C	1.00	1.01	1.00
T*9X*C20	UC60C	1.01	1.02	0.97
T*9X*D20	UC60D	1.02	1.07	0.99

Furnaces	Coils	T.C.	S.C.	KW
(Y*LC/T*8V/T*LV)*C16	FC/MC/PC48C	1.02	1.03	0.96
(Y*LC/T*8V/T*LV)*C20	FC/MC/PC48C	1.02	1.02	0.95
(Y*9C/T*9V)*C16	FC/MC/PC48C	1.01	1.01	0.97
(Y*9C/T*9V)*C20	FC/MC/PC48C	1.01	1.02	0.97
(Y*9C/T*9V)*D20	FC/MC/PC48D	1.02	1.03	0.96
(Y*LC/T*8V/T*LV)*C16	FC/PC60C	0.99	0.97	0.98
(Y*LC/T*8V/T*LV)*C20	FC/PC60C	0.99	0.98	0.98
(Y*9C/T*9V)*C16	FC/PC60C	1.00	1.03	1.00
(Y*9C/T*9V)*C20	FC/PC60C	1.01	1.03	1.02
(Y*9C/T*9V)*D20	FC/MC/PC60D	1.01	1.04	1.02
(Y*LC/T*8V/T*LV)*C16	HD60	1.01	1.03	0.97
(Y*LC/T*8V/T*LV)*C20	HD60	1.01	1.03	0.97
(Y*9C/T*9V)*C16	HD60	1.00	1.02	1.00
(Y*9C/T*9V)*C20	HD60	1.01	1.03	1.02
(Y*9C/T*9V)*D20	HD60	1.01	1.03	1.02
(Y*LC/T*8V/T*LV)*C16	UC60C	1.00	1.01	1.00
(Y*LC/T*8V/T*LV)*C20	UC60C	1.00	1.01	0.96
(Y*9C/T*9V)*C16	UC60C	0.99	1.00	0.99
(Y*9C/T*9V)*C20	UC60C	1.00	1.01	1.00
(Y*9C/T*9V)*D20	UC60D	1.00	1.01	1.00

COOLING PERFORMANCE DATA

CONDENSING UNIT MODEL NO.	YHJD48S41S4														
INDOOR COIL MODEL NO.	AHP48														
CONDENSING ENTERING AIR TEMPERATURE	IDCFM	1510					1710					1910				
	ID DB (°F)	80	80	75	80	80	80	80	75	80	80	80	80	75	80	80
	ID WB (°F)	57	62	62	67	72	57	62	62	67	72	57	62	62	67	72
65	T.C.	47.6	50.1	49.8	54.1	60.7	49.4	50.8	51.0	55.8	61.9	51.2	51.5	52.2	57.5	63.1
	S.C.	47.6	44.7	37.8	37.0	30.4	49.4	48.3	39.9	39.3	31.5	51.2	51.5	42.0	41.6	32.6
	KW	2.9	2.9	2.9	3.0	3.0	3.0	3.0	3.0	3.0	3.1	3.1	3.1	3.1	3.1	3.2
75	T.C.	45.1	46.6	46.5	50.8	56.9	46.7	47.2	47.5	52.2	58.0	48.4	47.9	48.5	53.6	59.0
	S.C.	45.1	43.1	36.2	35.6	28.9	46.7	45.8	38.3	37.8	30.0	48.4	47.9	40.3	40.0	31.1
	KW	3.2	3.2	3.2	3.2	3.3	3.2	3.2	3.2	3.3	3.3	3.3	3.3	3.3	3.4	3.4
85	T.C.	42.5	43.1	43.2	47.5	53.2	44.1	43.7	44.0	48.6	54.1	45.6	44.3	44.7	49.7	55.0
	S.C.	42.5	41.5	34.7	34.2	27.3	44.1	43.3	36.7	36.2	28.4	45.6	44.3	38.7	38.3	29.6
	KW	3.4	3.4	3.4	3.5	3.5	3.5	3.5	3.5	3.5	3.6	3.6	3.6	3.6	3.6	3.7
95	T.C.	40.0	39.6	39.9	44.2	49.4	41.4	40.2	40.4	45.0	50.2	42.8	40.7	41.0	45.8	51.0
	S.C.	40.0	39.6	33.1	32.7	25.8	41.4	40.2	35.0	34.7	26.9	42.8	40.7	37.0	36.6	28.0
	KW	3.6	3.6	3.6	3.7	3.8	3.7	3.7	3.7	3.8	3.9	3.8	3.8	3.8	3.9	4.0
105	T.C.	37.2	37.1	36.3	40.6	45.3	38.5	37.8	36.8	41.1	45.9	39.7	38.6	37.2	41.7	46.6
	S.C.	37.2	37.1	31.6	31.3	24.2	38.5	37.8	33.5	33.2	25.2	39.7	38.6	35.4	35.1	26.3
	KW	3.9	3.9	3.9	4.0	4.1	4.0	4.0	3.9	4.0	4.2	4.1	4.1	4.0	4.1	4.2
115	T.C.	34.5	34.5	32.8	36.9	41.1	35.5	35.5	33.1	37.2	41.6	36.6	36.4	33.5	37.6	42.1
	S.C.	34.5	34.5	30.0	29.8	22.5	35.5	35.5	31.9	31.7	23.6	36.6	36.4	33.5	33.5	24.6
	KW	4.1	4.1	4.1	4.2	4.3	4.2	4.2	4.2	4.3	4.4	4.4	4.4	4.3	4.4	4.5
125	T.C.	31.7	31.9	29.3	33.2	37.0	32.6	33.1	29.5	33.3	37.3	33.5	34.2	29.7	33.4	37.7
	S.C.	31.7	31.9	28.5	28.3	20.9	32.6	33.1	29.5	30.1	21.9	33.5	34.2	29.7	31.9	22.9
	KW	4.4	4.4	4.3	4.5	4.6	4.5	4.5	4.4	4.5	4.7	4.6	4.6	4.5	4.6	4.8

NOTE: ALL CAPACITIES INCLUDE INDOOR FAN HEAT. KW VALUES ARE FOR THE SYSTEM (OUTDOOR + INDOOR).

Multipliers for determining the performance with other indoor sections.

NOTE: For dry bulb temperatures different than those listed (between 73-87 °F), sensible capacity increases by 1060 BTUH per 1000 CFM per degree above the listed temperature and decreases by 1060 BTUH per 1000 CFM per degree below the listed temperature.

Air Handlers	Coils	T.C.	S.C.	KW
–	FC/MC/PC60	0.98	0.97	1.05
–	FC/MC62	0.99	0.98	1.07
–	UC60	0.98	0.95	1.05
AHE48D	–	0.99	0.97	0.97
AHE60D	–	1.00	1.02	0.93
AHP60	–	0.99	0.98	0.98
AHR48D	–	0.98	0.95	1.04
AHR60D	–	0.99	0.98	1.07
AHX48	–	1.01	1.01	1.00
AHX60	–	1.01	0.99	1.00
AV*48	–	1.00	0.99	0.99
AV*60	–	1.00	1.00	0.99
F4FV060	–	1.00	0.99	0.94
F5FP060	–	0.99	0.99	0.98
F6FP048	–	1.00	0.99	0.99
F6FP060	–	1.01	0.99	1.00
MX16C	FC60C	1.02	1.01	1.00
MX20D	FC/MC60D	1.02	1.01	1.00
MX20D	FC/MC62D	1.01	1.00	0.99
MV16C	FC60C	0.98	0.97	1.01
MV20D	FC/MC60D	0.99	0.98	0.98
MV20D	FC/MC62D	1.01	0.99	1.00

Furnaces	Coils	T.C.	S.C.	KW
T*(8,L)X*C16	FC/PC60C	0.99	0.98	0.98
T*(8,L)X*C20	FC/PC60C	0.99	0.98	0.98
T*9X*C16	FC/PC60C	0.99	0.98	0.98
T*9X*C20	FC/PC60C	0.99	0.98	0.98
T*9X*D20	FC/MC/PC60D	1.01	0.97	1.00
T*(8,L)X*C16	FC/MC62D	1.00	0.99	0.99
T*(8,L)X*C20	FC/MC62D	1.01	0.99	1.00
T*9X*C16	FC/MC62D	1.00	0.99	0.99
T*9X*C20	FC/MC62D	1.00	0.99	0.99
T*9X*D20	FC/MC62D	1.00	0.99	0.99
T*(8,L)X*C16	UC60C	0.99	0.96	0.98
T*(8,L)X*C20	UC60C	1.00	0.97	0.99
T*9X*C16	UC60C	0.99	0.96	0.98
T*9X*C20	UC60C	0.99	0.96	0.98
T*9X*D20	UC60D	0.99	0.95	0.98
(Y*LC/T*8V/T*LV)*C16	FC/PC60C	0.98	0.97	0.97
(Y*LC/T*8V/T*LV)*C20	FC/PC60C	0.98	0.97	0.96
(Y*9C/T*9V)*C16	FC/PC60C	0.98	0.97	0.97
(Y*9C/T*9V)*C20	FC/PC60C	0.98	0.97	0.97
(Y*9C/T*9V)*D20	FC/MC/PC60D	0.99	0.97	0.98
(Y*LC/T*8V/T*LV)*C16	FC/MC62D	1.00	0.99	0.99
(Y*LC/T*8V/T*LV)*C20	FC/MC62D	1.00	0.99	0.99
(Y*9C/T*9V)*C16	FC/MC62D	1.00	0.98	0.99
(Y*9C/T*9V)*C20	FC/MC62D	0.99	0.98	0.98
(Y*9C/T*9V)*D20	FC/MC62D	1.00	0.98	0.99
(Y*LC/T*8V/T*LV)*C16	UC60C	0.98	0.95	0.97
(Y*LC/T*8V/T*LV)*C20	UC60C	0.99	0.96	0.98
(Y*9C/T*9V)*C16	UC60C	0.98	0.95	0.97
(Y*9C/T*9V)*C20	UC60C	0.98	0.95	1.01
(Y*9C/T*9V)*D20	UC60D	0.98	0.95	0.97

COOLING PERFORMANCE DATA																
CONDENSING UNIT MODEL NO.		**YHJD60S41S4**														
INDOOR COIL MODEL NO.		**AHX60**														
CONDENSING ENTERING AIR TEMPERATURE	IDCFM	1630					1830					2030				
	ID DB (°F)	80	80	75	80	80	80	80	75	80	80	80	80	75	80	80
	ID WB (°F)	57	62	62	67	72	57	62	62	67	72	57	62	62	67	72
65	T.C.	54.6	57.9	58.1	63.9	69.9	56.8	59.2	59.2	65.2	71.2	58.9	60.5	60.3	66.5	72.6
	S.C.	54.4	49.3	42.2	42.0	34.7	56.5	52.5	44.2	43.9	35.7	58.6	55.7	46.2	45.9	36.8
	KW	3.2	3.2	3.3	3.3	3.4	3.3	3.3	3.3	3.4	3.4	3.4	3.4	3.4	3.5	3.5
75	T.C.	52.6	55.0	55.3	60.7	66.5	54.5	56.1	56.2	61.9	67.6	56.4	57.2	57.1	63.1	68.8
	S.C.	52.3	48.2	40.9	40.6	33.1	54.2	51.0	42.9	42.6	34.2	56.1	53.9	44.9	44.6	35.2
	KW	3.6	3.6	3.6	3.7	3.7	3.7	3.7	3.7	3.8	3.8	3.8	3.8	3.8	3.9	3.9
85	T.C.	50.5	52.2	52.4	57.5	63.1	52.2	53.0	53.2	58.6	64.0	53.8	53.9	53.9	59.7	65.0
	S.C.	50.3	47.0	39.7	39.3	31.6	51.9	49.6	41.7	41.3	32.7	53.6	52.1	43.6	43.3	33.7
	KW	4.0	4.0	4.0	4.1	4.1	4.1	4.1	4.1	4.2	4.2	4.2	4.2	4.2	4.2	4.3
95	T.C.	48.5	49.3	49.5	54.3	59.7	49.9	49.9	50.2	55.3	60.4	51.3	50.5	50.8	56.3	61.2
	S.C.	48.2	45.9	38.5	38.0	30.1	49.6	48.1	40.4	40.0	31.1	51.0	50.3	42.3	42.0	32.2
	KW	4.4	4.4	4.4	4.5	4.5	4.5	4.5	4.5	4.5	4.6	4.6	4.6	4.6	4.6	4.7
105	T.C.	45.8	45.9	46.0	50.6	55.7	47.1	47.0	46.5	51.4	56.4	48.5	48.1	47.1	52.1	57.0
	S.C.	45.6	44.1	37.0	36.5	28.6	46.9	45.9	38.9	38.5	29.6	48.2	47.8	40.9	40.4	30.7
	KW	4.9	4.9	4.9	4.9	5.0	5.0	5.0	5.0	5.0	5.1	5.1	5.1	5.1	5.1	5.2
115	T.C.	43.2	42.5	42.4	46.9	51.7	44.4	44.0	42.9	47.4	52.3	45.7	45.6	43.4	48.0	52.9
	S.C.	43.0	42.3	35.5	35.1	27.0	44.2	43.8	37.4	37.0	28.1	45.5	45.4	39.4	38.9	29.2
	KW	5.4	5.4	5.4	5.4	5.5	5.5	5.5	5.4	5.5	5.6	5.6	5.5	5.5	5.6	5.6
125	T.C.	40.5	39.1	38.8	43.1	47.7	41.7	41.1	39.3	43.5	48.2	42.9	43.1	39.8	43.8	48.7
	S.C.	40.3	39.1	34.0	33.6	25.5	41.5	41.1	36.0	35.4	26.6	42.7	42.9	38.0	37.3	27.7
	KW	5.9	5.8	5.8	5.9	6.0	5.9	5.9	5.9	6.0	6.0	6.0	6.0	6.0	6.1	6.1
NOTE: ALL CAPACITIES INCLUDE INDOOR FAN HEAT. KW VALUES ARE FOR THE SYSTEM (OUTDOOR + INDOOR).																

Multipliers for determining the performance with other indoor sections.

NOTE: For dry bulb temperatures different than those listed (between 73-87 °F), sensible capacity increases by 1060 BTUH per 1000 CFM per degree above the listed temperature and decreases by 1060 BTUH per 1000 CFM per degree below the listed temperature.

Air Handlers	Coils	T.C.	S.C.	KW
–	FC/MC62	1.00	0.99	1.08
–	FC64	1.02	1.02	1.10
AHE60D	–	1.00	1.00	1.00
F6FP060	–	1.02	1.02	1.01
MX20D	FC/MC62D	1.00	1.00	0.99
MX20D	FC64D	1.02	1.04	1.01
MV20D	FC/MC62D	1.01	1.00	1.04
MV20D	FC64D	1.02	1.02	1.01
MA20D	FC/MC62D	1.00	0.99	1.08
MA20D	FC64D	1.02	1.02	1.10

Furnaces	Coils	T.C.	S.C.	KW
T*(8,L)X*C20	FC/MC62D	1.00	0.98	0.99
T*9X*C20	FC/MC62D	1.00	0.95	0.99
T*9X*D20	FC/MC62D	1.00	0.96	0.99
T*(8,L)X*C20	FC64D	1.02	1.00	1.01
T*9X*C20	FC64D	1.02	0.98	1.01
T*9X*D20	FC64D	1.02	0.99	1.01
(Y*LC/T*8V/T*LV)*C20	FC/MC62D	0.99	0.95	0.98
(Y*9C/T*9V)*C20	FC/MC62D	0.99	0.95	1.02
(Y*9C/T*9V)*D20	FC/MC62D	0.99	0.95	1.02
(Y*LC/T*8V/T*LV)*C20	FC64D	1.01	0.99	1.00
(Y*9C/T*9V)*C20	FC64D	1.01	0.99	1.04
(Y*9C/T*9V)*D20	FC64D	1.01	0.98	1.04

HEATING PERFORMANCE DATA										
CONDENSING UNIT MODEL NO		YHJD18S41S2								
EVAPORATOR COIL MODEL NO		FC35								
AIR TEMP. ENTERING OUTDOOR UNIT	AIR TEMP. ENTERING INDOOR COIL	ID CFM								
		450			600			750		
		MBH	COP	KW	MBH	COP	KW	MBH	COP	KW
60	60	21.1	4.1	1.50	22.2	4.5	1.44	23.3	4.9	1.39
	70	20.5	3.6	1.65	21.6	4.0	1.59	22.6	4.3	1.53
	80	19.9	3.2	1.81	20.9	3.5	1.74	21.9	3.9	1.66
47	60	18.6	3.8	1.45	19.2	4.0	1.41	19.8	4.2	1.38
	70	17.7	3.3	1.60	18.4	3.5	1.55	19.1	3.7	1.51
	80	16.8	2.8	1.74	17.6	3.1	1.69	18.4	3.3	1.64
40	60	16.7	3.4	1.43	17.3	3.6	1.40	17.9	3.8	1.37
	70	16.1	3.0	1.57	16.8	3.2	1.53	17.4	3.4	1.50
	80	15.6	2.7	1.70	16.3	2.9	1.66	17.0	3.1	1.62
30	60	14.6	3.1	1.39	15.1	3.2	1.37	15.5	3.4	1.36
	70	14.2	2.7	1.52	14.6	2.9	1.50	15.0	3.0	1.48
	80	13.7	2.4	1.66	14.1	2.5	1.63	14.4	2.6	1.61
17	60	11.7	2.6	1.34	12.0	2.6	1.34	12.3	2.7	1.34
	70	11.2	2.2	1.48	11.6	2.3	1.47	11.9	2.4	1.46
	80	10.8	2.0	1.62	11.1	2.0	1.60	11.5	2.1	1.58
10	60	10.1	2.3	1.31	10.3	2.3	1.31	10.4	2.3	1.32
	70	9.6	1.9	1.45	9.9	2.0	1.44	10.2	2.1	1.44
	80	9.1	1.7	1.59	9.5	1.8	1.58	9.9	1.9	1.57
NOTE: ALL CAPACITIES ARE NET, WITH INDOOR FAN HEAT ALREADY DEDUCTED. KW VALUES ARE FOR THE SYSTEM (OUTDOOR + INDOOR).										

Multipliers for determining the performance with other indoor sections.

Air Handlers	Coils	MBH	COP	KW
–	FC/MC/PC18	1.00	1.00	1.00
–	FC/MC/PC24	1.03	1.04	0.99
–	HD24	0.97	0.96	1.02
AHE18B	–	0.93	1.08	0.86
AHP18	–	1.00	1.00	1.00
AHP24	–	1.00	1.00	1.00
AHR18B	–	0.93	1.03	0.90
AHX18	–	0.98	0.99	1.00
AV*24	–	0.98	0.99	1.00
F4FP024	–	1.01	1.01	1.00
F6FP018	–	0.98	0.99	1.00
F6FP024	–	0.98	0.99	1.00
MX12B	FC/MC18B	0.93	1.08	0.86
MX12B	FC/MC24B	0.93	1.16	0.80
MX12B	FC/MC30B	0.93	1.16	0.80
MV12B	FC/MC18B	0.98	0.98	1.00
MV12B	FC/MC24B	1.00	1.02	0.99

Furnaces	Coils	MBH	COP	KW
T*(8,L)X*A12	FC/MC/PC18A	0.97	1.06	0.92
T*(8,L)X*B12	FC/MC/PC18B	0.97	1.06	0.92
T*9X*B12	FC/MC/PC18B	0.97	1.06	0.92
T*(8,L)X*A12	FC/MC/PC24A	0.99	1.10	0.90
T*(8,L)X*B12	FC/MC/PC24B	0.99	1.10	0.90

Furnaces	Coils	MBH	COP	KW
T*9X*B12	FC/MC/PC24B	0.99	1.10	0.90
T*(8,L)X*A12	FC/MC/PC30A	0.99	1.10	0.90
T*(8,L)X*B12	FC/MC/PC30B	0.99	1.10	0.90
T*9X*B12	FC/MC/PC30B	0.99	1.10	0.90
(Y*LC/T*8V/T*LV)*A12	FC/MC/PC18A	0.98	1.07	0.92
(Y*LC/T*8V/T*LV)*B12	FC/MC/PC18B	0.97	1.06	0.92
(Y*9C/T*9V)*B12	FC/MC/PC18B	0.98	1.07	0.92
(Y*LC/T*8V/T*LV)*A12	FC/MC/PC24A	1.01	1.10	0.92
(Y*LC/T*8V/T*LV)*B12	FC/MC/PC24B	0.99	1.10	0.90
(Y*9C/T*9V)*B12	FC/MC/PC24B	1.01	1.11	0.91
(Y*LC/T*8V/T*LV)*A12	FC/MC/PC30A	1.01	1.10	0.92
(Y*LC/T*8V/T*LV)*B12	FC/MC/PC30B	0.99	1.10	0.90
(Y*9C/T*9V)*B12	FC/MC/PC30B	1.01	1.11	0.91
(Y*LC/T*8V/T*LV)*A12	HD24	0.98	1.06	0.93
(Y*LC/T*8V/T*LV)*B12	HD24	0.96	1.04	0.92
(Y*9C/T*9V)*B12	HD24	0.98	1.07	0.92
(Y*LC/T*8V/T*LV)*A12	UC18A	0.99	1.08	0.92
(Y*LC/T*8V/T*LV)*B12	UC18B	0.98	1.07	0.92
(Y*9C/T*9V)*B12	UC18B	0.99	1.08	0.91
(Y*LC/T*8V/T*LV)*A12	UC24A	1.02	1.11	0.91
(Y*LC/T*8V/T*LV)*B12	UC24B	0.99	1.10	0.90
(Y*9C/T*9V)*B12	UC24B	1.01	1.12	0.91
(Y*LC/T*8V/T*LV)*A12	UC30A	1.01	1.11	0.91
(Y*LC/T*8V/T*LV)*B12	UC30B	0.99	1.10	0.90
(Y*9C/T*9V)*B12	UC30B	1.01	1.12	0.91

HEATING PERFORMANCE DATA										
CONDENSING UNIT MODEL NO		YHJD24S41S4								
EVAPORATOR COIL MODEL NO		AHP30								
AIR TEMP. ENTERING OUTDOOR UNIT	AIR TEMP. ENTERING INDOOR COIL	ID CFM								
		600			800			1000		
		MBH	COP	KW	MBH	COP	KW	MBH	COP	KW
60	60	28.3	3.8	2.20	27.5	3.7	2.15	26.7	3.7	2.10
	70	27.5	3.5	2.27	26.9	3.5	2.23	26.4	3.5	2.19
	80	26.7	3.3	2.35	26.3	3.3	2.32	26.0	3.3	2.28
47	60	24.9	3.6	2.03	24.5	3.6	2.01	24.1	3.6	1.98
	70	23.8	3.4	2.08	24.0	3.4	2.09	24.1	3.4	2.10
	80	22.7	3.1	2.14	23.4	3.2	2.15	24.1	3.3	2.17
40	60	23.1	3.5	1.94	22.7	3.5	1.93	22.4	3.4	1.92
	70	21.9	3.2	1.98	22.0	3.2	1.99	22.0	3.2	1.99
	80	20.7	3.0	2.03	21.2	3.0	2.05	21.7	3.1	2.07
30	60	19.0	3.1	1.79	19.6	3.2	1.82	20.1	3.2	1.84
	70	17.7	2.8	1.83	18.6	2.9	1.87	19.4	3.0	1.90
	80	16.4	2.6	1.87	17.6	2.7	1.92	18.7	2.8	1.96
17	60	13.8	2.5	1.64	13.9	2.4	1.73	14.1	2.3	1.83
	70	13.3	2.4	1.65	13.8	2.3	1.73	14.3	2.3	1.82
	80	12.5	2.2	1.68	13.4	2.2	1.75	14.3	2.3	1.81
10	60	12.7	2.4	1.58	11.1	2.0	1.61	9.5	1.7	1.64
	70	11.1	2.0	1.59	10.7	1.9	1.64	10.3	1.8	1.69
	80	9.4	1.7	1.61	10.2	1.8	1.68	11.1	1.9	1.75
NOTE: ALL CAPACITIES ARE NET, WITH INDOOR FAN HEAT ALREADY DEDUCTED. KW VALUES ARE FOR THE SYSTEM (OUTDOOR + INDOOR).										

Multipliers for determining the performance with other indoor sections.

Air Handlers	Coils	MBH	COP	KW
–	FC/MC/PC32	1.00	1.00	1.00
–	FC/MC/PC35	0.99	0.99	1.00
–	FC/MC/PC37	1.00	1.02	0.98
–	FC/MC/PC43	1.00	1.02	0.98
AHE24B	–	0.98	1.07	0.92
AHE30B	–	0.98	1.07	0.92
AHR24B	–	0.98	1.01	0.96
AHR30B	–	0.98	1.01	0.96
AHX30	–	1.00	1.08	0.93
AHX36	–	1.00	1.08	0.93
AV*36	–	0.97	1.08	0.89
F4FP040	–	1.00	1.00	1.00
F6FP030	–	0.99	1.06	0.94
F6FP036	–	0.98	1.07	0.92
MX12B	FC/MC35B	0.97	1.08	0.89
MX12B	FC/MC43B	0.97	1.08	0.90
MV12B	FC/MC35B	0.97	1.06	0.91
MV12B	FC/MC43B	0.99	1.09	0.91

Furnaces	Coils	MBH	COP	KW
T*(8,L)X*A12	FC/MC/PC32A	0.97	1.08	0.89
T*(8,L)X*B12	FC/MC/PC35B	0.98	1.10	0.89
T*(8,L)X*C16	FC/MC/PC35C	0.98	1.10	0.89
T*(8,L)X*C20	FC/MC/PC35C	0.98	1.08	0.91
T*9X*B12	FC/MC/PC35B	0.96	1.07	0.90
T*9X*C16	FC/MC/PC35C	0.96	1.06	0.90
T*9X*C20	FC/MC/PC35C	0.98	1.09	0.90
T*(8,L)X*A12	FC/MC/PC37A	0.99	1.13	0.88
T*(8,L)X*B12	FC/MC/PC43B	0.99	1.13	0.88
T*(8,L)X*C16	FC/MC/PC43C	0.99	1.12	0.89
T*(8,L)X*C20	FC/MC/PC43C	0.98	1.10	0.89
T*9X*B12	FC/MC/PC43B	0.98	1.11	0.89
T*9X*C16	FC/MC/PC43C	0.98	1.11	0.89
T*9X*C20	FC/MC/PC43C	0.98	1.10	0.89
(Y*LC/T*8V/T*LV)*A12	FC/MC/PC32A	0.98	1.05	0.93
(Y*LC/T*8V/T*LV)*B12	FC/MC/PC35B	0.96	1.04	0.92
(Y*LC/T*8V/T*LV)*C16	FC/MC/PC35C	0.98	1.08	0.91
(Y*LC/T*8V/T*LV)*C20	FC/MC/PC35C	0.95	1.05	0.90
(Y*9C/T*9V)*B12	FC/MC/PC35B	0.98	1.07	0.92
(Y*9C/T*9V)*C16	FC/MC/PC35C	0.99	1.08	0.92
(Y*9C/T*9V)*C20	FC/MC/PC35C	0.96	1.05	0.91
(Y*LC/T*8V/T*LV)*A12	FC/MC/PC37A	0.99	1.08	0.92
(Y*LC/T*8V/T*LV)*B12	FC/MC/PC43B	0.98	1.07	0.91
(Y*LC/T*8V/T*LV)*C16	FC/MC/PC43C	1.00	1.11	0.90
(Y*LC/T*8V/T*LV)*C20	FC/MC/PC43C	0.97	1.08	0.89
(Y*9C/T*9V)*B12	FC/MC/PC43B	0.99	1.08	0.92
(Y*9C/T*9V)*C16	FC/MC/PC43C	0.99	1.09	0.91
(Y*9C/T*9V)*C20	FC/MC/PC43C	1.00	1.11	0.90

HEATING PERFORMANCE DATA										
CONDENSING UNIT MODEL NO		**YHJD30S41S4**								
EVAPORATOR COIL MODEL NO		**AHP30**								
AIR TEMP. ENTERING OUTDOOR UNIT	**AIR TEMP. ENTERING INDOOR COIL**	ID CFM								
		800			1000			1200		
		MBH	COP	KW	MBH	COP	KW	MBH	COP	KW
60	60	32.2	3.7	2.52	31.2	3.7	2.47	30.2	3.7	2.41
	70	31.6	3.5	2.64	30.9	3.5	2.60	30.2	3.5	2.56
	80	30.9	3.3	2.77	30.5	3.3	2.73	30.2	3.3	2.70
47	60	28.9	3.6	2.35	28.3	3.6	2.33	27.7	3.5	2.31
	70	27.9	3.4	2.43	27.6	3.3	2.45	27.3	3.2	2.47
	80	26.9	3.1	2.51	26.9	3.1	2.51	26.9	3.1	2.50
40	60	26.7	3.5	2.25	26.5	3.4	2.25	26.3	3.4	2.26
	70	25.6	3.2	2.32	25.6	3.2	2.33	25.6	3.2	2.34
	80	24.4	3.0	2.39	24.7	3.0	2.41	24.9	3.0	2.43
30	60	23.2	3.3	2.08	23.4	3.3	2.11	23.5	3.2	2.13
	70	21.3	2.9	2.16	21.8	2.9	2.18	22.3	3.0	2.20
	80	19.4	2.6	2.23	20.3	2.6	2.25	21.1	2.7	2.26
17	60	17.3	2.6	1.92	17.8	2.7	1.95	18.4	2.7	1.99
	70	15.4	2.3	1.97	16.1	2.3	2.04	16.8	2.3	2.12
	80	12.7	1.9	2.00	13.6	1.9	2.08	14.5	2.0	2.16
10	60	14.2	2.2	1.86	14.4	2.2	1.94	14.5	2.1	2.03
	70	12.1	1.9	1.87	12.2	1.8	1.94	12.3	1.8	2.01
	80	9.9	1.6	1.87	10.0	1.5	1.94	10.1	1.5	2.00
NOTE: ALL CAPACITIES ARE NET, WITH INDOOR FAN HEAT ALREADY DEDUCTED. KW VALUES ARE FOR THE SYSTEM (OUTDOOR + INDOOR).										

Multipliers for determining the performance with other indoor sections.

Air Handlers	Coils	MBH	COP	KW
–	FC/MC/PC32	1.00	0.99	1.01
–	FC/MC/PC35	1.00	0.99	1.01
–	FC/MC/PC37	1.02	1.02	1.00
–	FC/MC/PC43	1.02	1.02	1.00
AHE30B	–	0.97	1.03	0.94
AHE36C	–	0.98	1.08	0.91
AHP36	–	1.01	1.02	0.99
AHR30B	–	1.01	1.00	1.01
AHR36B	–	1.01	1.02	1.00
AHX30	–	0.99	1.05	0.94
AHX36	–	0.99	1.10	0.90
AV*36	–	0.99	1.11	0.90
F4FP040	–	1.00	0.99	1.01
F6FP030	–	0.99	1.02	0.97
F6FP036	–	0.98	1.05	0.93
MX12B	FC/MC35B	0.98	1.05	0.93
MX16C	FC/MC35C	0.96	1.08	0.89
MX12B	FC/MC43B	0.99	1.08	0.92
MX16C	FC/MC43C	0.96	1.08	0.89
MV12B	FC/MC35B	0.98	1.06	0.92
MV12B	FC/MC43B	1.00	1.08	0.92
MV16C	FC/MC35C	0.99	1.08	0.91
MV16C	FC/MC43C	1.00	1.09	0.92

Furnaces	Coils	MBH	COP	KW
T*(8,L)X*A12	FC/MC/PC32A	0.99	1.04	0.95
T*(8,L)X*B12	FC/MC/PC35B	1.00	1.07	0.94
T*(8,L)X*C16	FC/MC/PC35C	0.99	1.08	0.92
T*(8,L)X*C20	FC/MC/PC35C	0.95	1.03	0.92
T*9X*B12	FC/MC/PC35B	0.99	1.06	0.94
T*9X*C16	FC/MC/PC35C	0.99	1.07	0.92
T*9X*C20	FC/MC/PC35C	0.94	1.04	0.91
T*(8,L)X*A12	FC/MC/PC37A	1.01	1.10	0.92
T*(8,L)X*B12	FC/MC/PC43B	1.01	1.10	0.92
T*(8,L)X*C16	FC/MC/PC43C	0.99	1.10	0.90
T*(8,L)X*C20	FC/MC/PC43C	0.96	1.07	0.90
T*9X*B12	FC/MC/PC43B	1.01	1.09	0.92
T*9X*C16	FC/MC/PC43C	1.00	1.09	0.92
T*9X*C20	FC/MC/PC43C	0.93	1.01	0.92
((Y*LC/T*8V/T*LV)*A12	FC/MC/PC32A	1.00	1.00	1.00
(Y*LC/T*8V/T*LV)*B12	FC/MC/PC35B	0.99	1.04	0.95
(Y*LC/T*8V/T*LV)*C16	FC/MC/PC35C	0.98	1.05	0.93
(Y*LC/T*8V/T*LV)*C20	FC/MC/PC35C	0.99	1.06	0.94
(Y*9C/T*9V)*B12	FC/MC/PC35B	0.99	1.02	0.97
(Y*9C/T*9V)*C16	FC/MC/PC35C	0.98	1.05	0.93
(Y*9C/T*9V)*C20	FC/MC/PC35C	0.98	1.05	0.93
(Y*LC/T*8V/T*LV)*A12	FC/MC/PC37A	0.99	1.05	0.94
(Y*LC/T*8V/T*LV)*B12	FC/MC/PC43B	1.01	1.07	0.94
(Y*LC/T*8V/T*LV)*C16	FC/MC/PC43C	1.00	1.09	0.92
(Y*LC/T*8V/T*LV)*C20	FC/MC/PC43C	0.99	1.10	0.90
(Y*9C/T*9V)*B12	FC/MC/PC43B	1.01	1.05	0.96
(Y*9C/T*9V)*C16	FC/MC/PC43C	1.00	1.07	0.93
(Y*9C/T*9V)*C20	FC/MC/PC43C	1.00	1.08	0.92

HEATING PERFORMANCE DATA										
CONDENSING UNIT MODEL NO		YHJD36S41S4								
EVAPORATOR COIL MODEL NO		AHP36								
AIR TEMP. ENTERING OUTDOOR UNIT	AIR TEMP. ENTERING INDOOR COIL	ID CFM								
		1000			1200			1400		
		MBH	COP	KW	MBH	COP	KW	MBH	COP	KW
60	60	38.0	3.7	3.01	37.2	3.6	3.00	36.4	3.6	2.98
	70	37.5	3.5	3.18	36.9	3.4	3.17	36.4	3.4	3.15
	80	37.0	3.2	3.34	36.7	3.2	3.33	36.4	3.2	3.32
47	60	34.7	3.5	2.87	34.0	3.5	2.87	33.3	3.4	2.86
	70	34.1	3.3	3.01	33.7	3.3	3.01	33.3	3.3	3.00
	80	33.6	3.1	3.14	33.5	3.1	3.16	33.3	3.1	3.18
40	60	32.3	3.4	2.75	32.0	3.4	2.78	31.7	3.3	2.80
	70	31.5	3.2	2.88	31.4	3.2	2.91	31.4	3.1	2.94
	80	30.6	3.0	3.00	30.9	3.0	3.04	31.1	3.0	3.08
30	60	28.4	3.2	2.59	28.5	3.2	2.63	28.7	3.1	2.68
	70	27.3	3.0	2.69	27.8	3.0	2.74	28.3	3.0	2.79
	80	26.1	2.7	2.79	27.0	2.8	2.85	27.9	2.8	2.91
17	60	21.8	2.7	2.37	22.9	2.7	2.44	24.0	2.8	2.51
	70	21.1	2.5	2.46	22.3	2.6	2.53	23.4	2.6	2.60
	80	17.6	2.1	2.47	18.8	2.2	2.55	20.1	2.2	2.63
10	60	21.2	2.6	2.36	20.7	2.5	2.43	20.3	2.4	2.51
	70	18.2	2.2	2.38	18.0	2.1	2.46	17.8	2.1	2.53
	80	15.2	1.9	2.40	15.3	1.8	2.48	15.3	1.8	2.56
NOTE: ALL CAPACITIES ARE NET, WITH INDOOR FAN HEAT ALREADY DEDUCTED. KW VALUES ARE FOR THE SYSTEM (OUTDOOR + INDOOR).										

Multipliers for determining the performance with other indoor sections.

Air Handlers	Coils	MBH	COP	KW
–	FC/MC/PC43	1.00	1.00	1.00
–	FC/MC/PC37	0.99	1.01	0.99
–	HD48	0.96	0.93	1.03
–	FC/MC/PC48	1.01	1.01	0.99
–	UC48	1.01	1.04	0.98
AHE36C	–	0.97	1.08	0.91
AHE42D	–	0.97	1.09	0.90
AHP42	–	1.01	1.02	0.98
AHR36B	–	1.00	1.03	0.98
AHR42C	–	1.00	1.04	0.96
AHX36	–	0.98	1.06	0.92
AHX42	–	0.98	1.09	0.90
AV*36	–	0.98	1.06	0.92
F5FP048	–	0.99	1.08	0.92
F6FP042	–	0.99	1.09	0.91
MX12B	FC/MC43B	0.98	1.06	0.93
MX16C	FC/MC43C	0.96	1.08	0.89
MX12D	FC/MC48D	0.98	1.09	0.90
MX16C	FC/MC48C	0.96	1.09	0.88
MV12B	FC/MC43B	0.99	1.05	0.94
MV12D	FC/MC48D	0.98	1.09	0.90
MV16C	FC/MC43C	0.98	1.06	0.92
MV16C	FC/MC48C	0.98	1.07	0.92

Furnaces	Coils	MBH	COP	KW
T*(8,L)X*A12	FC/MC/PC37A	0.99	1.06	0.93
T*(8,L)X*B12	FC/MC/PC43B	0.99	1.06	0.93
T*(8,L)X*C16	FC/MC/PC43C	0.97	1.07	0.90
T*(8,L)X*C20	FC/MC/PC43C	0.98	1.08	0.91
T*9X*B12	FC/MC/PC43B	0.99	1.05	0.94

Furnaces	Coils	MBH	COP	KW
T*9X*C16	FC/MC/PC43C	0.98	1.06	0.93
T*(8,L)X*C16	FC/MC/PC48C	0.98	1.09	0.90
T*(8,L)X*C20	FC/MC/PC48C	0.99	1.09	0.91
T*9X*C16	FC/MC/PC48C	1.00	1.08	0.93
T*9X*C20	FC/MC/PC48C	0.98	1.07	0.92
T*9X*D20	FC/MC/PC48D	0.98	1.08	0.91
T*9X*C20	FC/MC/PC43C	0.98	1.05	0.93
T*(8,L)X*C16	UC48C	0.99	1.12	0.88
T*(8,L)X*C20	UC48C	1.00	1.12	0.89
T*9X*C16	UC48C	1.01	1.11	0.91
T*9X*C20	UC48C	0.99	1.10	0.90
T*9X*D20	UC48D	0.99	1.10	0.90
(Y*LC/T*8V/T*LV)*B12	FC/MC/PC43B	1.00	1.02	0.98
(Y*LC/T*8V/T*LV)*C16	FC/MC/PC43C	0.98	1.05	0.94
(Y*LC/T*8V/T*LV)*C20	FC/MC/PC43C	0.98	1.05	0.93
(Y*9C/T*9V)*B12	FC/MC/PC43B	0.99	1.02	0.97
(Y*9C/T*9V)*C16	FC/MC/PC43C	0.98	1.04	0.95
(Y*9C/T*9V)*C20	FC/MC/PC43C	0.98	1.05	0.94
(Y*LC/T*8V/T*LV)*A12	FC/MC/PC37A	0.98	1.02	0.97
(Y*LC/T*8V/T*LV)*C16	FC/MC/PC48C	0.99	1.06	0.93
(Y*LC/T*8V/T*LV)*C20	FC/MC/PC48C	0.98	1.08	0.91
(Y*9C/T*9V)*C16	FC/MC/PC48C	0.99	1.05	0.94
(Y*9C/T*9V)*C20	FC/MC/PC48C	1.01	1.06	0.95
(Y*9C/T*9V)*D20	FC/MC/PC48D	0.99	1.06	0.93
(Y*LC/T*8V/T*LV)*C16	UC48C	0.99	1.09	0.91
(Y*LC/T*8V/T*LV)*C20	UC48C	0.99	1.10	0.90
(Y*9C/T*9V)*C16	UC48C	1.00	1.08	0.92
(Y*9C/T*9V)*C20	UC48C	1.02	1.08	0.94
(Y*9C/T*9V)*D20	UC48D	1.00	1.09	0.92

HEATING PERFORMANCE DATA										
CONDENSING UNIT MODEL NO		YHJD42S41S4								
EVAPORATOR COIL MODEL NO		AHP48								
AIR TEMP. ENTERING OUTDOOR UNIT	AIR TEMP. ENTERING INDOOR COIL	ID CFM								
		1200			1400			1600		
		MBH	COP	KW	MBH	COP	KW	MBH	COP	KW
60	60	45.9	4.2	3.23	45.2	4.1	3.20	44.6	4.1	3.18
	70	44.7	3.8	3.42	44.5	3.8	3.40	44.4	3.8	3.39
	80	43.5	3.5	3.61	43.8	3.6	3.60	44.1	3.6	3.58
47	60	41.8	4.2	2.92	41.5	4.0	3.07	41.2	3.7	3.22
	70	40.8	3.9	3.09	40.3	3.7	3.22	39.8	3.5	3.35
	80	39.7	3.6	3.27	39.1	3.4	3.35	38.4	3.3	3.43
40	60	39.0	4.0	2.85	38.6	3.8	2.98	38.2	3.6	3.12
	70	37.7	3.7	3.00	37.1	3.5	3.13	36.5	3.3	3.25
	80	36.3	3.4	3.15	35.5	3.2	3.27	34.8	3.0	3.39
30	60	34.9	3.7	2.73	34.0	3.5	2.85	33.2	3.3	2.97
	70	32.6	3.4	2.85	31.7	3.1	2.95	30.8	3.0	3.06
	80	30.3	3.0	2.96	29.4	2.8	3.06	28.5	2.6	3.16
17	60	26.6	3.0	2.64	25.8	2.8	2.71	25.0	2.6	2.79
	70	22.6	2.6	2.60	21.9	2.4	2.69	21.2	2.2	2.77
	80	20.3	2.2	2.67	19.7	2.1	2.77	19.1	1.9	2.87
10	60	20.9	2.5	2.47	20.1	2.3	2.57	19.3	2.1	2.66
	70	18.7	2.2	2.50	18.0	2.0	2.60	17.4	1.9	2.70
	80	16.4	1.9	2.52	15.9	1.8	2.63	15.4	1.7	2.73
NOTE: ALL CAPACITIES ARE NET, WITH INDOOR FAN HEAT ALREADY DEDUCTED. KW VALUES ARE FOR THE SYSTEM (OUTDOOR + INDOOR).										

Multipliers for determining the performance with other indoor sections.

Air Handlers	Coils	MBH	COP	KW
–	FC/MC/PC60	1.01	1.01	1.01
–	HD60	0.96	0.93	1.04
–	UC60	1.00	0.99	1.01
AHE48D	–	0.99	1.04	0.95
AHP60	–	1.00	1.06	0.94
AHR48D	–	1.00	0.98	1.02
AHX42	–	0.89	0.98	0.90
AHX48	–	0.98	1.05	0.93
AV*48	–	0.99	1.07	0.92
AV*60	–	0.99	1.08	0.92
F4FP045	–	1.01	1.01	1.00
F4FV060	–	0.99	1.07	0.93

Air Handlers	Coils	MBH	COP	KW
F5FP060	–	1.00	1.06	0.94
F6FP048	–	0.99	1.07	0.92
MX16C	FC/MC48C	0.98	1.06	0.92
MX20D	FC/MC48D	0.98	1.05	0.93
MX16C	FC60C	1.00	1.10	0.91
MX20D	FC/MC60D	1.00	1.10	0.91
MV16C	FC/MC48C	0.98	1.04	0.94
MV16C	FC60C	0.99	1.05	0.94
MV20D	FC/MC48D	0.98	1.07	0.92
MV20D	FC/MC60D	0.99	1.06	0.93

Continued on next page.

Furnaces	Coils	MBH	COP	KW
T*(8,L)X*C16	FC/MC/PC48C	0.89	0.98	0.90
T*(8,L)X*C20	FC/MC/PC48C	0.90	0.99	0.91
T*9X*C16	FC/MC/PC48C	0.91	0.97	0.94
T*9X*C20	FC/MC/PC48C	0.90	0.98	0.92
T*9X*D20	FC/MC/PC48D	0.90	0.99	0.91
T*(8,L)X*C16	FC/PC60C	0.99	1.08	0.92
T*(8,L)X*C20	FC/PC60C	1.00	1.08	0.93
T*9X*C16	FC/PC60C	1.00	1.06	0.94
T*9X*C20	FC/PC60C	1.00	1.08	0.93
T*9X*D20	FC/MC/PC60D	1.00	1.09	0.92
T*(8,L)X*C16	HD60	0.95	0.99	0.96
T*(8,L)X*C20	HD60	0.95	0.99	0.96
T*9X*C16	HD60	0.95	0.97	0.98
T*9X*C20	HD60	0.95	0.98	0.97
T*9X*D20	HD60	0.95	0.98	0.97
T*(8,L)X*C16	UC60C	0.98	1.06	0.92
T*(8,L)X*C20	UC60C	0.99	1.07	0.92
T*9X*C16	UC60C	0.99	1.04	0.95
T*9X*C20	UC60C	0.99	1.05	0.94
T*9X*D20	UC60D	0.99	1.08	0.91

Furnaces	Coils	MBH	COP	KW
(Y*LC/T*8V/T*LV)*C16	FC/MC/PC48C	0.91	0.97	0.94
(Y*LC/T*8V/T*LV)*C20	FC/MC/PC48C	0.91	0.97	0.94
(Y*9C/T*9V)*C16	FC/MC/PC48C	0.91	0.95	0.95
(Y*9C/T*9V)*C20	FC/MC/PC48C	0.91	0.95	0.96
(Y*9C/T*9V)*D20	FC/MC/PC48D	0.91	0.96	0.95
(Y*LC/T*8V/T*LV)*C16	FC/PC60C	1.00	1.05	0.95
(Y*LC/T*8V/T*LV)*C20	FC/PC60C	0.99	1.06	0.93
(Y*9C/T*9V)*C16	FC/PC60C	1.00	1.02	0.98
(Y*9C/T*9V)*C20	FC/PC60C	1.00	1.03	0.97
(Y*9C/T*9V)*D20	FC/MC/PC60D	1.00	1.04	0.96
(Y*LC/T*8V/T*LV)*C16	HD60	0.95	0.96	0.99
(Y*LC/T*8V/T*LV)*C20	HD60	0.95	0.97	0.98
(Y*9C/T*9V)*C16	HD60	0.96	0.94	1.02
(Y*9C/T*9V)*C20	HD60	0.96	0.95	1.01
(Y*9C/T*9V)*D20	HD60	0.96	0.96	1.01
(Y*LC/T*8V/T*LV)*C16	UC60C	0.99	1.04	0.95
(Y*LC/T*8V/T*LV)*C20	UC60C	0.99	1.05	0.94
(Y*9C/T*9V)*C16	UC60C	1.00	1.01	0.99
(Y*9C/T*9V)*C20	UC60C	1.00	1.02	0.98
(Y*9C/T*9V)*D20	UC60D	0.99	1.03	0.96

HEATING PERFORMANCE DATA										
CONDENSING UNIT MODEL NO		**YHJD48S41S4**								
EVAPORATOR COIL MODEL NO		**AHP48**								
AIR TEMP. ENTERING OUTDOOR UNIT	**AIR TEMP. ENTERING INDOOR COIL**	ID CFM								
		1400			1600			1800		
		MBH	COP	KW	MBH	COP	KW	MBH	COP	KW
60	60	53.4	3.7	4.17	53.2	3.7	4.17	53.1	3.7	4.16
	70	51.9	3.5	4.32	52.0	3.5	4.31	52.2	3.6	4.30
	80	50.4	3.3	4.45	50.8	3.3	4.46	51.3	3.4	4.46
47	60	46.3	3.6	3.75	46.6	3.6	3.77	46.9	3.6	3.78
	70	46.5	3.7	3.71	46.0	3.5	3.84	45.5	3.4	3.97
	80	46.7	3.7	3.68	45.4	3.5	3.84	44.2	3.2	4.01
40	60	42.6	3.5	3.52	42.8	3.5	3.55	43.0	3.5	3.58
	70	39.8	3.3	3.57	40.3	3.3	3.61	40.8	3.3	3.65
	80	37.0	3.0	3.63	37.8	3.0	3.68	38.7	3.0	3.72
30	60	32.1	3.1	3.04	33.2	3.1	3.12	34.4	3.1	3.21
	70	31.7	2.9	3.16	32.7	3.0	3.24	33.7	3.0	3.31
	80	31.4	2.8	3.29	32.2	2.8	3.36	32.9	2.8	3.42
17	60	27.2	2.8	2.82	28.1	2.9	2.88	29.0	2.9	2.95
	70	26.6	2.7	2.89	27.6	2.7	2.98	28.5	2.7	3.07
	80	24.2	2.4	2.96	25.1	2.4	3.05	26.1	2.4	3.14
10	60	23.1	2.6	2.62	24.4	2.6	2.72	25.7	2.7	2.83
	70	21.7	2.3	2.71	22.7	2.4	2.81	23.7	2.4	2.91
	80	20.3	2.1	2.80	21.1	2.1	2.90	21.8	2.1	2.99
NOTE: ALL CAPACITIES ARE NET, WITH INDOOR FAN HEAT ALREADY DEDUCTED. KW VALUES ARE FOR THE SYSTEM (OUTDOOR + INDOOR).										

Multipliers for determining the performance with other indoor sections.

Air Handlers	Coils	MBH	COP	KW
–	FC/MC/PC60	0.99	1.02	0.97
–	FC/MC62	0.99	1.01	0.98
–	UC60	0.99	1.02	0.97
AHE48D	–	0.98	1.05	0.93
AHE60D	–	0.98	1.06	0.93
AHP60	–	0.98	1.06	0.93
AHR48D	–	0.99	1.02	0.97
AHR60D	–	0.99	1.02	0.97
AHX48	–	0.97	1.05	0.92
AHX60	–	0.97	1.07	0.91
AV*48	–	0.99	1.08	0.92
AV*60	–	0.98	1.09	0.90
F4FV060	–	0.99	1.07	0.93
F5FP060	–	0.99	1.06	0.94
F6FP048	–	0.99	1.07	0.92
F6FP060	–	0.97	1.07	0.91
MX16C	FC60C	0.98	1.09	0.90
MX20D	FC/MC60D	0.98	1.10	0.89
MX20D	FC/MC62D	0.98	1.09	0.90
MV16C	FC60C	0.99	1.02	0.97
MV20D	FC/MC60D	0.98	1.06	0.92
MV20D	FC/MC62D	0.97	1.06	0.91

Furnaces	Coils	MBH	COP	KW
T*(8,L)X*C16	FC/PC60C	0.98	1.06	0.93
T*(8,L)X*C20	FC/PC60C	0.98	1.06	0.92
T*9X*C16	FC/PC60C	0.98	1.06	0.93

Furnaces	Coils	MBH	COP	KW
T*9X*C20	FC/PC60C	0.98	1.07	0.92
T*9X*D20	FC/MC/PC60D	0.96	1.09	0.88
T*(8,L)X*C16	FC/MC62D	0.98	1.05	0.94
T*(8,L)X*C20	FC/MC62D	0.97	1.06	0.92
T*9X*C16	FC/MC62D	0.98	1.05	0.94
T*9X*C20	FC/MC62D	0.97	1.05	0.92
T*9X*D20	FC/MC62D	0.98	1.04	0.94
T*(8,L)X*C16	UC60C	0.98	1.05	0.93
T*(8,L)X*C20	UC60C	0.96	1.09	0.88
T*9X*C16	UC60C	0.98	1.05	0.94
T*9X*C20	UC60C	0.97	1.06	0.92
T*9X*D20	UC60D	0.96	1.07	0.89
(Y*LC/T*8V/T*LV)*C16	FC/PC60C	0.99	1.04	0.95
(Y*LC/T*8V/T*LV)*C20	FC/PC60C	0.99	1.04	0.95
(Y*9C/T*9V)*C16	FC/PC60C	0.99	1.03	0.96
(Y*9C/T*9V)*C20	FC/PC60C	0.99	1.03	0.96
(Y*9C/T*9V)*D20	FC/MC/PC60D	0.99	1.04	0.95
(Y*LC/T*8V/T*LV)*C16	FC/MC62D	0.98	1.04	0.94
(Y*LC/T*8V/T*LV)*C20	FC/MC62D	0.98	1.05	0.94
(Y*9C/T*9V)*C16	FC/MC62D	0.98	1.03	0.95
(Y*9C/T*9V)*C20	FC/MC62D	0.98	1.02	0.96
(Y*9C/T*9V)*D20	FC/MC62D	0.98	1.03	0.95
(Y*LC/T*8V/T*LV)*C16	UC60C	0.98	1.03	0.95
(Y*LC/T*8V/T*LV)*C20	UC60C	0.98	1.05	0.93
(Y*9C/T*9V)*C16	UC60C	0.98	1.02	0.96
(Y*9C/T*9V)*C20	UC60C	0.98	1.02	0.96
(Y*9C/T*9V)*D20	UC60D	0.98	1.03	0.95

HEATING PERFORMANCE DATA										
CONDENSING UNIT MODEL NO		YHJD60S41S4								
EVAPORATOR COIL MODEL NO		AHX60								
AIR TEMP. ENTERING OUTDOOR UNIT	AIR TEMP. ENTERING INDOOR COIL	ID CFM								
		1600			1800			2000		
		MBH	COP	KW	MBH	COP	KW	MBH	COP	KW
60	60	65.1	3.8	5.00	63.9	3.9	4.76	62.7	4.1	4.53
	70	65.6	3.5	5.56	64.7	3.6	5.31	63.8	3.7	5.06
	80	66.0	3.2	6.10	65.4	3.3	5.85	64.8	3.4	5.60
47	60	58.0	3.7	4.66	57.4	3.8	4.45	56.7	3.9	4.24
	70	58.0	3.3	5.10	57.5	3.4	4.94	56.9	3.5	4.78
	80	58.0	3.1	5.52	57.5	3.2	5.33	57.1	3.2	5.15
40	60	53.2	3.6	4.35	43.2	3.2	3.93	33.1	2.8	3.51
	70	53.2	3.2	4.80	48.0	3.1	4.50	42.9	3.0	4.21
	80	53.1	3.0	5.25	52.9	3.1	5.07	52.7	3.2	4.90
30	60	41.5	3.0	4.04	37.8	2.9	3.82	34.1	2.8	3.61
	70	43.6	2.8	4.52	41.7	2.8	4.32	39.8	2.8	4.12
	80	45.7	2.7	5.01	45.6	2.8	4.82	45.4	2.9	4.63
17	60	34.5	2.2	4.66	36.8	2.6	4.18	39.0	3.1	3.71
	70	35.3	2.4	4.32	36.4	2.6	4.04	37.6	2.9	3.77
	80	36.1	2.5	4.30	36.2	2.5	4.17	36.4	2.6	4.05
10	60	33.1	2.7	3.56	32.0	2.7	3.42	30.8	2.8	3.27
	70	30.4	2.3	3.80	29.6	2.4	3.69	28.7	2.4	3.57
	80	27.7	2.0	4.06	27.2	2.0	3.96	26.6	2.0	3.86
NOTE: ALL CAPACITIES ARE NET, WITH INDOOR FAN HEAT ALREADY DEDUCTED. KW VALUES ARE FOR THE SYSTEM (OUTDOOR + INDOOR).										

Multipliers for determining the performance with other indoor sections.

Air Handlers	Coils	MBH	COP	KW
–	FC/MC62	1.00	0.98	1.02
–	FC64	1.00	1.00	1.00
AHE60D	–	1.00	1.00	1.00
F6FP060	–	1.00	1.01	0.99
MX20D	FC/MC62D	0.99	1.01	0.98
MX20D	FC64D	1.00	1.04	0.97
MV20D	FC/MC62D	1.00	0.99	1.01
MV20D	FC64D	1.00	1.01	0.99

Furnaces	Coils	MBH	COP	KW
T*(8,L)X*C20	FC/MC62D	1.00	1.00	1.00
T*9X*C20	FC/MC62D	1.00	0.98	1.02
T*9X*D20	FC/MC62D	1.00	0.99	1.01
T*(8,L)X*C20	FC64D	1.00	1.02	0.98
T*9X*C20	FC64D	1.00	1.01	0.99
T*9X*D20	FC64D	1.00	1.02	0.98
(Y*LC/T*8V/T*LV)*C20	FC/MC62D	1.00	0.98	1.02
(Y*9C/T*9V)*C20	FC/MC62D	1.00	0.97	1.03
(Y*9C/T*9V)*D20	FC/MC62D	1.00	0.97	1.03
(Y*LC/T*8V/T*LV)*C20	FC64D	1.00	1.01	0.99
(Y*9C/T*9V)*C20	FC64D	1.00	0.99	1.01
(Y*9C/T*9V)*D20	FC64D	1.00	1.00	1.00

Subject to change without notice. Published in U.S.A.
Copyright © 2011 by Johnson Controls, Inc. All rights reserved.

571209-YTG-B-1211
Supersedes: 571209-YTG-A-0410

Johnson Controls Unitary Products
5005 York Drive
Norman, OK 73069