YORK®
Heating and Air Conditioning

TECHNICAL GUIDE

AFFINITY™ SERIES
SPLIT-SYSTEM HEAT PUMPS
16 SEER – R-410A
(2 THRU 5 NOMINAL TONS)
MODELS: YZF024 THRU 060*C

Due to continuous product improvement, specifications are subject to change without notice.

Visit us on the web at
www.upgnet.com and www.york.com

Additional rating information can be found at
www.ahridirectory.org

WARRANTY SUMMARY*

Standard 10-year limited parts warranty.
Extended Lifetime limited compressor warranty.

Extended parts and compressor warranties require online registration within 90 days of purchase for replacement or closing for new home construction.

* Does not apply to R-22 models, 3-Phase models, or internet sales.

See Limited Warranty certificate in User's Information Manual for details.

DESCRIPTION

The 16 SEER Series unit is the outdoor part of a versatile climate system. It is designed with a matching indoor coil component from Johnson Controls Unitary Products. Available for typical applications, this climate system is supported with accessories and documents to serve specific functions.

FEATURES

- **Superior Coil Protection –** A decorative, stamped metal coil guard completely protects coil from debris and other large damaging material.
- **Isolated Compressor Compartment –** A molded composite bulkhead isolates the compressor from the rest of the unit, reducing sound and vibration.
- **Protected Compressors –** Each compressor is protected against high and low pressure as well as excessive temperature. This is accomplished by by the simultaneous operation of a high pressure relief valve and temperature sensors which protect the compressor if undesirable conditions occur.
- **Environmentally Friendly Refrigerant –** Next generation refrigerant R-410A delivers environmentally friendly performance, with zero ozone depletion.
- **Durable Finish –** Automotive quality finish provides the ultimate protection from harmful U.V. rays as well as rust creep, ensuring long-lasting, high quality appearance. A powder-paint topcoat is applied over a baked-on primer, using a galvanized, zinc coated steel base material. The result is a finish that has been proven in testing to provide 33% greater durability than conventional powder-coat finishes.
- **Lower Installed Cost –** Designed to provide enhanced installability by featuring a slide-down control compartment, allowing easy access to control components along with angled service valves to reduce overall installation time and cost.
- **Low Operating Sound Levels –** A fan design boasting technology adapted from aeronautic and defense engineering provides for whisper quiet operation by allowing airflow to flow smoothly and efficiently across the fan tips.
- **Filter-Drier** – A factory installed, solid core liquid line filter-drier filters harmful debris and moisture from the system.
- **Easy Service Access –** A full end, full service, access panel with handle makes for easy entry to internal components.
- **Composite Base –** Strong and durable composite base pan provides added strength while resisting rust and corrosion, as well as reducing sound and vibration.
- **QuietDrive™ System -** The swept-wing fan, composite base pan, isolated compressor compartment, and single-stage compressor are engineered as a system to reduce overall sound to a mere whisper. The 5-ton system utilizes a two-stage compressor.
- **Complete System Control –** All models utilize the exclusive microprocessor based, on-demand, defrost control system. This system provides optimal comfort, efficiency, and constant montoring of the entire system for reliable operation. Defrost cycles occur only when necessary. An adjustable balance point insures supplemental heat is brought on only when required to meet the space load, for optimum efficiency and reliability.
- **Communications Capable –** Requiring only a simple 4-wire installation, the communicating capability enables the use of the Touch Screen Communicating Control, allowing real time visibility of system operation and the use of diagnostic features, while still maintaining the ability to function with a traditional thermostat.
- **Agency Listed -** U.L. and C.U.L. listed - approved for outdoor application. The unit is certified in accordance with the Unitary Small Equipment certification program, which is based on ANSI/AHRI Standard 210/240.

Physical and Electrical Data

Model		YZF02413(C)	YZF03013(C)	YZF03613(C)	YZF04213(C)	YZF04813(C)	YZF06013(C)
Unit Supply Voltage		208-230V, 1ϕ, 60Hz					
Normal Voltage Range [1]		187 to 252					
Minimum Circuit Ampacity		17.5	17.3	22.6	26.1	26.9	33.8
Max. Overcurrent Device Amps [2]		30	30	35	45	45	50
Min. Overcurrent Device Amps [3]		20	20	25	30	30	35
Compressor Type		Scroll	Scroll	Scroll	Scroll	Scroll	2-Stage Scroll
Compressor Amps	Rated Load	13.4	12.8	17	19.8	20.5	26
	Locked Rotor	58.3	64	77	115	115	118
Crankcase Heater		No	No	No	No	No	No
Factory External Discharge Muffler		Yes	Yes	Yes	Yes	Yes	Yes
Factory External Check Valve		No	No	No	No	No	No
HS Kit Required with TXV [4]		No	No	No	No	No	No
Fan Motor Amps	Rated Load	0.7	1.3	1.3	1.3	1.3	1.3
Fan Diameter Inches		24	24	24	24	24	24
Fan Motor	Rated HP	1/8	1/4	1/4	1/4	1/4	1/4
	Nominal RPM	1075	850	850	850	850	850
	Nominal CFM	2750	3800	3800	3800	3400	3700
Coil	Face Area Sq. Ft.	20.6	23.6	23.6	23.6	23.6	23.6
	Rows Deep	1	1	1	1	2	2
	Fins / Inch	22	22	22	22	22	14
Liquid Line Set OD (Field Installed)		3/8	3/8	3/8	3/8	3/8	3/8
Vapor Line Set OD (Field Installed)		3/4	3/4	3/4	7/8	7/8	1-1/8
Unit Charge (Lbs. - Oz.) [5]		9 - 3	9 - 13	10 - 10	11 - 12	14 - 5	14 - 11
Charge Per Foot, Oz.		0.62	0.62	0.62	0.67	0.67	0.75
Operating Weight Lbs.		199	228	230	234	283	298

1. Rated in accordance with AHRI Standard 110-2012, utilization range “A”.
2. Dual element fuses or HACR circuit breaker. Maximum allowable overcurrent protection.
3. Dual element fuses or HACR circuit breaker. Minimum recommended overcurrent protection.
4. See Hard Start Kit Accessory Installation Manual for Hard Start Kit part number for each model.
5. The Unit Charge is correct for the outdoor unit, matched indoor coil, and 15 feet of refrigerant tubing. For tubing lengths other than 15 feet, add or subtract the amount of refrigerant, using the difference in length multiplied by the per foot value.

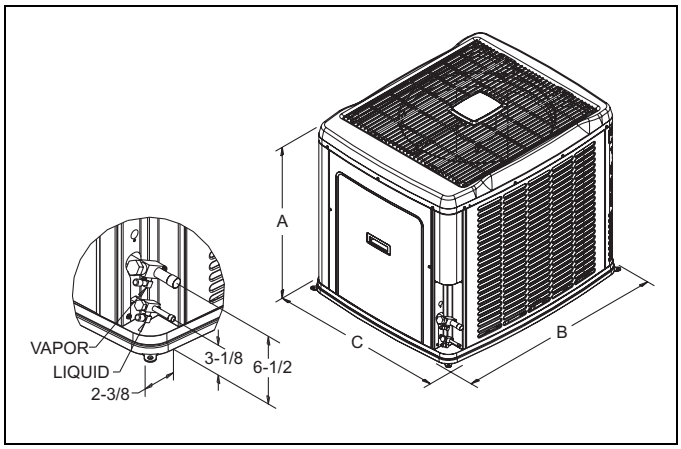

All dimensions are in inches. They are subject to change without notice. Certified dimensions will be provided upon request.

Unit Model	Dimensions (Inches)			Refrigerant Connection Service Valve Size	
	A	B	C	Liquid	Vapor
024	39-1/2	37	31	3/8”	3/4”
030	39-1/2	42	34		
036	39-1/2	42	34		
042	39-1/2	42	34		7/8”
048	39-1/2	42	34		
060	39-1/2	42	34		7/8”*

* Adapter fitting required for 1-1/8” line set.

System Charge for Various Matched Systems						
Outdoor Unit	YZF02413(C)	YZF03013(C)	YZF03613(C)	YZF04213(C)	YZF04813(C)	YZF06013(C)
Approved System Thermal Expansion Valve[1]	4N1	4H1	4H1	4J1	4J1	4K1
Indoor Coil[2,3,4]	**TXV Kit[5] - Additional Charge, Oz**					
AHE24B	TXV + 0	–	–	–	–	–
AHE30B	TXV + 0	–	–	–	–	–
AHE36C	–	TXV + 0	–	–	–	–
AHE42D	–	–	TXV + 0	–	–	–
AHE48D	–	–	TXV + 20	–	–	–
AHE60D	–	–	–	TXV + 0	TXV + 0	TXV + 0
AHX30	TXV + 0	–	–	–	–	–
AHX36	TXV + 12	TXV + 0	–	–	–	–
AHX42	–	–	TXV + 0	–	–	–
AHX48	–	–	TXV + 20	–	–	–
AHX60	–	–	–	TXV + 0	TXV + 0	TXV + 0
AV*36	TXV + 12	TXV + 0	–	–	–	–
AV*48	–	–	TXV + 20	–	–	–
FC/MC/PC32	TXV + 0	–	–	–	–	–
FC/MC/PC35	TXV + 0	–	–	–	–	–
FC/MC/PC37	TXV + 12	TXV + 0	–	–	–	–
FC/MC/PC43	TXV + 12	TXV + 0	–	–	–	–
FC/MC/PC/UC48	–	–	TXV + 0	–	–	–
FC/MC/PC/UC60	–	–	TXV + 20	–	–	–
FC/PC62	–	–	–	TXV + 0	TXV + 0	TXV + 0
FC64	–	–	–	–	TXV + 8	TXV + 8
F6FP030	TXV + 0	–	–	–	–	–
F6FP036	TXV + 0	–	–	–	–	–
F6FP042	–	–	TXV + 0	–	–	–
F6FP048	–	–	TXV + 20	–	–	–
F6FP060	–	–	–	TXV + 0	TXV + 0	–
Some of the combinations shown in the above System Charge table require Advanced Main Air Circulating Fan indoor product. For approved coil only matches, please see the “COOLING CAPACITY - Upflow, Downflow & Horizontal Furnaces and Coils” table.						

FOOTNOTES:

1. For applications requiring a TXV use S1-1TVM*** series kit.
2. Systems matched with furnaces or air handlers not equipped with blower-off delays may require blower Time Delay Kit S1-2FD06700224.
3. PC coils cannot be used in downflow or horizontal applications. FC coils cannot be used in horizontal applications.
4. Refer to Cooling Performance Data tables for actual system performance for specified system matches.
5. A TXV kit must be used with these coils to obtain system performance.

Note: If a TXV is factory installed on the coil, it must be replaced with the listed TXV.

PROCEDURES:

1. Unit factory charge listed on the unit nameplate includes refrigerant for the outdoor unit, the smallest matched indoor unit, and 15 feet of interconnecting line tubing.
2. Verify the TXV or orifice and additional charge required for specific matched indoor unit in the system using the above table.
3. Add additional charge for the amount of interconnecting line tubing greater than 15 feet at the rate specified in Physical and Electrical Data Table.
4. For indoor matches requiring additional charge, the refrigerant needs to be weighed in for specific matched indoor unit and lineset length.
5. Permanently mark the unit nameplate with the total system charge. Total System Charge = Base Charge (as shipped) + charge adder for matched indoor unit + charge adder for line set.

COOLING CAPACITY - With Air Handler Coils

UNIT MODEL	AIR HANDLER		COIL[1] MODEL	COOLING					
	MODEL	WIDTH		STAGE	RATED CFM	NET MBH		SEER	EER
						TOTAL	SENS.		
16 SEER HP WITH AIR HANDLERS									
YZF02413(C)	AHE24B	17	–	–	795	23.8	18.0	15.00	12.50
	AHE30B	17	–	–	795	23.8	18.00	15.00	12.50
	AV*36	21	–	–	725	23.8	17.4	16.00	13.00
	AHX30	17	–	–	835	23.8	18.1	15.00	12.50
	AHX36	21	–	–	820	24.0	18.1	15.00	12.50
	F6FP030	17	–	–	850	23.8	17.9	15.00	12.50
	F6FP036	21	–	–	855	23.8	18.0	15.00	12.50
	MV12B	17	FC/MC35B	–	800	23.6	17.8	15.00	12.50
	MV12B	17	FC/MC43B	–	800	24.0	18.6	16.00	13.00
	MX12B	17	FC/MC35B	–	815	24.0	18.2	15.00	12.50
	MX12B	17	FC/MC43B	–	735	23.8	17.6	15.00	12.50
YZF03013(C)	AHE36C	21	–	–	1000	29.0	22.0	16.00	13.00
	AV*36	21	–	–	960	28.8	21.6	16.00	13.00
	AHX36	21	–	–	1005	28.8	22.0	16.00	13.00
	MV12B	17	FC/MC43B	–	1000	28.8	21.8	16.00	13.00
	MV16C	21	FC/MC43C	–	1000	28.8	22.0	16.00	13.00
	MX12B	17	FC/MC43B	–	1095	29.2	23.0	16.00	13.00
YZF03613(C)	AHE42D	21	–	–	1180	34.8	26.0	15.00	12.50
	AHE48D	24	–	–	1195	35.4	26.6	15.00	12.50
	AV*48	24	–	–	1220	35.2	26.6	15.00	12.50
	AHX42	21	–	–	1200	35.2	26.4	15.00	12.50
	AHX48	24	–	–	1255	35.4	27.2	15.00	12.50
	F6FP042	24	–	–	1290	35.2	27.2	15.00	12.50
	F6FP048	24	–	–	1125	34.8	25.6	15.00	12.50
	MV12D	24	FC/MC48D	–	1160	34.8	26.0	15.00	12.50
	MV16C	21	FC/MC48C	–	1200	34.6	25.8	15.00	12.50
	MV12D	24	FC/MC60D	–	1135	34.6	25.6	15.00	12.50
	MX12D	24	FC/MC48D	–	1225	35.2	26.6	15.00	12.50
	MX16C	21	FC/MC48C	–	1150	35.0	25.8	15.00	12.50
	MX12D	24	FC/MC60D	–	1275	35.2	27.0	15.00	12.50
YZF04213(C)	AHE60D	24	–	–	1390	41.5	28.2	15.00	12.50
	AHX60	24	–	–	1440	41.5	28.0	15.00	12.50
	F6FP060	24	–	–	1475	41.5	28.6	15.00	12.50
	MV20D	24	FC/MC62D	–	1400	41.0	28.0	15.00	12.50
	MX20D	24	FC/MC62D	–	1470	42.0	29.0	15.00	12.50
YZF04813(C)	AHE60D	24	–	–	1565	46.5	34.8	15.00	12.50
	AHX60	24	–	–	1570	46.5	35.2	15.00	12.50
	F6FP060	24	–	–	1570	46.5	35.0	15.00	12.50
	MV20D	24	FC/MC62D	–	1630	46.5	34.8	15.00	12.50
	MV20D	24	FC64D	–	1630	48.0	36.8	15.00	12.50
	MX20D	24	FC/MC62D	–	1605	47.0	35.4	15.00	12.50
	MX20D	24	FC64D	–	1605	48.0	36.8	15.00	12.50

For notes, see Page 5.

COOLING CAPACITY - With Air Handler Coils (Continued)

UNIT MODEL	AIR HANDLER		COIL[1] MODEL	COOLING					
	MODEL	WIDTH		STAGE	RATED CFM	NET MBH		SEER	EER
						TOTAL	SENS.		
YZF06013(C)	AHE60D	24	–	1	1160	47.0	30.4	15.00	11.60
				2	1835	56.5	40.5		
	AHX60	24	–	1	1255	48.0	31.6	15.00	20.65
				2	1930	57.0	41.5		11.60
	MV20D	24	FC/MC62D	1	1075	46.5	29.8	15.00	20.80
				2	1630	56.0	39.0		11.80
	MV20D	24	FC64D	1	1075	48.0	31.2	15.00	21.60
				2	1630	57.5	40.5		12.00
	MX20D	24	FC/MC62D	1	1390	49.0	33.0	15.00	11.85
				2	1795	56.5	40.5		
	MX20D	24	FC64D	1	1390	50.5	34.4	15.00	12.15
				2	1795	58.5	42.0		

Rated in accordance with DOE test procedures (Federal Register 12-27-79 and 3-18-88) and ANSI/AHRI Standard 210/240.
Cooling MBH based on 80°F entering air temperature, 50% RH (Relative Humidity), and rated air flow.
EER (Energy Efficiency Ratio) is the total cooling output in BTUs at 95°F outdoor ambient divided by the total electric power in watt-hours at those conditions.
SEER (Seasonal Energy Efficiency Ratio) is the total cooling output in BTUs during a normal annual usage period for cooling divided by the total electric power input in watt-hours during the same period.

1. MC coils available with a factory installed horizontal drain pan. See price pages for specific model number.

— = Not applicable.

MA Modular Air Handlers use Coil Only Ratings.

COOLING CAPACITY - With Upflow, Downflow, & Horizontal Furnaces and Coils (Coil Only Ratings)

UNIT MODEL	COIL		CFM RANGE (MIN.-MAX.)	STAGE	COOLING				
	MODEL	WIDTH			RATED CFM	NET MBH		SEER[1]	EER
						TOTAL	SENS.		
YZF02413(C)	FC/MC/PC35	17,21	600 - 1000	–	800	23.2	17.2	13.35	11.50
	FC/MC/PC37	14	600 - 1000	–	800	23.6	17.5	13.35	11.50
	FC/MC/PC43	17,21	600 - 1000	–	800	23.6	17.5	13.35	11.50
YZF03013(C)	FC/MC/PC37	14	800 - 1200	–	1000	28.4	21.4	14.00	12.00
	FC/MC/PC43	17,21	800 - 1200	–	1000	28.4	21.4	14.00	12.00
YZF03613(C)	FC/MC/PC48	21,24	1000 - 1400	–	1200	34.4	25.6	13.35	11.50
	FC/MC/PC60	-	1000 - 1400	–	1200	34.0	25.4	13.35	11.50
YZF04213(C)	FC/MC62	24	1200 - 1600	–	1400	40.5	27.4	13.35	11.50
YZF04813(C)	FC/MC62	24	1400 - 1800	–	1600	46.0	34.4	13.35	11.50
	FC64	24	1400 - 1800	–	1600	47.0	35.6	13.35	11.50
YZF06013(C)	FC/MC62	24	1150 - 1550	1	1350	48.0	31.8	15.00	11.10
			1600 - 2000	2	1800	55.5	39.5		
	FC64	24	1150 - 1550	1	1350	49.5	33.2	15.00	11.40
			1600 - 2000	2	1800	57.5	41.5		

1. Requires a S1-2FD06700224 Blower Time Delay unless a standard furnace is equipped with one.

MA Modular Air Handlers use Coil Only Ratings.

PSC furnaces, such as the TG8S, TGLS, and TG9S, use Coil Only Ratings.

COOLING CAPACITY - With High Efficiency Motor Furnaces

UNIT MODEL	FURNACE		COIL MODEL[1]	COOLING				
	MODEL	WIDTH		RATED CFM	NET MBH		SEER	EER
					TOTAL	SENS.		
16 SEER HP WITH HIGH EFFICIENCY MOTOR FURNACES[2]								
YZF02413(C)	T*(8,L)X*A12	14	FC/MC/PC32A	800	23.8	17.9	15.00	12.50
	T*(8,L)X*B12	17	FC/MC/PC35B	850	24.0	18.2	15.00	12.50
	T*(8,L)X*C16	21	FC/MC/PC35C	865	24.0	18.2	15.00	12.50
	T*(8,L)X*C20	21	FC/MC/PC35C	885	24.0	18.1	15.00	12.50
	T*9X*B12	17	FC/MC/PC35B	785	23.8	17.7	15.00	12.50
	T*9X*C16	21	FC/MC/PC35C	765	23.6	17.5	15.00	12.50
	T*9X*C20	21	FC/MC/PC35C	825	24.0	18.1	15.00	12.50
	T*(8,L)X*A12	14	FC/MC/PC37A	840	24.0	18.7	16.00	13.00
	T*(8,L)X*B12	17	FC/MC/PC43B	865	24.0	18.7	16.00	13.00
	T*(8,L)X*C16	21	FC/MC/PC43C	855	24.0	18.7	16.00	13.00
	T*(8,L)X*C20	21	FC/MC/PC43C	815	24.0	18.6	16.00	13.00
	T*9X*B12	17	FC/MC/PC43B	800	24.0	18.7	16.00	13.00
	T*9X*C16	21	FC/MC/PC43C	785	24.0	18.0	16.00	13.00
	T*9X*C20	21	FC/MC/PC43C	790	24.0	18.1	16.00	13.00
	(Y*LC/T*8V/T*LV)*A12	14	FC/MC/PC32A	755	23.4	17.3	15.00	12.50
	(Y*LC/T*8V/T*LV)*B12	17	FC/MC/PC35B	785	23.6	17.6	15.00	12.50
	(Y*LC/T*8V/T*LV)*C16	21	FC/MC/PC35C	775	23.6	17.6	15.00	12.50
	(Y*LC/T*8V/T*LV)*C20	21	FC/MC/PC35C	755	23.6	17.4	15.00	12.50
	(Y*9C/T*9V)*B12	17	FC/MC/PC35B	815	23.8	18.0	15.00	12.50
	(Y*9C/T*9V)*C16	21	FC/MC/PC35C	900	24.0	18.8	15.00	12.50
	(Y*9C/T*9V)*C20	21	FC/MC/PC35C	755	23.6	17.4	15.00	12.50
	(Y*LC/T*8V/T*LV)*A12	14	FC/MC/PC37A	765	23.8	17.7	15.00	12.50
	(Y*LC/T*8V/T*LV)*B12	17	FC/MC/PC43B	790	24.0	18.0	15.00	12.50
	(Y*LC/T*8V/T*LV)*C16	21	FC/MC/PC43C	770	24.0	17.8	16.00	13.00
	(Y*LC/T*8V/T*LV)*C20	21	FC/MC/PC43C	740	23.8	17.5	15.00	12.50
	(Y*9C/T*9V)*B12	17	FC/MC/PC43B	800	24.0	18.5	15.00	12.50
	(Y*9C/T*9V)*C16	21	FC/MC/PC43C	810	24.0	18.6	16.00	13.00
	(Y*9C/T*9V)*C20	21	FC/MC/PC43C	890	24.0	19.1	16.00	13.00
YZF03013(C)	T*(8,L)X*A12	14	FC/MC/PC37A	1090	29.2	23.0	15.00	12.50
	T*(8,L)X*B12	17	FC/MC/PC43B	1090	29.2	23.0	15.00	12.50
	T*(8,L)X*C16	21	FC/MC/PC43C	955	28.8	21.6	15.00	12.50
	T*(8,L)X*C20	21	FC/MC/PC43C	870	28.2	20.6	15.00	12.50
	T*9X*B12	17	FC/MC/PC43B	1095	29.4	23.0	15.00	12.50
	T*9X*C16	21	FC/MC/PC43C	1055	29.4	23.0	15.00	12.50
	(Y*LC/T*8V/T*LV)*A12	14	FC/MC/PC37A	950	28.4	21.2	15.00	12.50
	(Y*LC/T*8V/T*LV)*B12	17	FC/MC/PC43B	1045	28.8	22.2	15.00	12.50
	(Y*LC/T*8V/T*LV)*C16	21	FC/MC/PC43C	1035	29.0	22.4	15.00	12.50
	(Y*LC/T*8V/T*LV)*C20	21	FC/MC/PC43C	1025	29.2	22.4	15.00	12.50
	(Y*9C/T*9V)*B12	17	FC/MC/PC43B	1035	28.8	22.0	15.00	12.50
	(Y*9C/T*9V)*C16	21	FC/MC/PC43C	1030	28.8	22.2	15.00	12.50
	(Y*9C/T*9V)*C20	21	FC/MC/PC43C	995	28.8	21.8	15.00	12.50
YZF03613(C)	T*(8,L)X*C16	21	FC/MC/PC48C	1185	34.8	26.0	15.00	12.50
	T*(8,L)X*C20	21	FC/MC/PC48C	1270	35.4	27.0	15.00	12.50
	T*9X*C16	21	FC/MC/PC48C	1280	35.2	27.0	15.00	12.50
	T*9X*C20	21	FC/MC/PC48C	1205	34.6	25.8	15.00	12.50
	T*9X*D20	24	FC/MC/PC48D	1240	35.2	26.8	15.00	12.50
	T*(8,L)X*C16	21	FC/PC60C	1190	34.8	25.8	15.00	12.50
	T*(8,L)X*C20	21	FC/PC60C	1275	35.4	27.2	15.00	12.50
	T*9X*C16	21	FC/PC60C	1315	35.4	27.4	15.00	12.50
	T*9X*C20	21	FC/PC60C	1240	35.2	26.8	15.00	12.50
	T*9X*D20	24	FC/MC/PC60D	1310	35.6	27.6	15.00	12.50
	T*(8,L)X*C16	21	UC48C	1185	34.8	26.2	15.00	12.50
	T*(8,L)X*C20	21	UC48C	1270	35.0	26.8	15.00	12.50
	T*9X*C16	21	UC48C	1280	34.8	26.8	15.00	12.50
	T*9X*C20	21	UC48C	1205	34.6	26.0	15.00	12.50
	T*9X*D20	24	UC48D	1240	34.6	26.0	15.00	12.50

For notes, see Page 7.

COOLING CAPACITY - With High Efficiency Motor Furnaces (Continued)

UNIT MODEL	FURNACE		COIL MODEL[1]	COOLING				
	MODEL	WIDTH		RATED CFM	NET MBH		SEER	EER
					TOTAL	SENS.		
16 SEER HP WITH HIGH EFFICIENCY MOTOR FURNACES[2]								
YZF03613(C)	T*(8,L)X*C16	21	UC60C	1190	34.6	25.8	15.00	12.50
	T*(8,L)X*C20	21	UC60C	1275	34.8	26.6	15.00	12.50
	T*9X*C16	21	UC60C	1300	34.8	26.8	15.00	12.50
	T*9X*C20	21	UC60C	1240	34.4	25.6	15.00	12.50
	T*9X*D20	24	UC60D	1310	35.0	27.0	15.00	12.50
	(Y*LC/T*8V/T*LV)*C16	21	FC/MC/PC48C	1195	34.6	25.8	15.00	12.50
	(Y*LC/T*8V/T*LV)*C20	21	FC/MC/PC48C	1150	34.6	25.8	15.00	12.50
	(Y*9C/T*9V)*D20	24	FC/MC/PC48D	1240	35.0	26.6	15.00	12.50
	(Y*LC/T*8V/T*LV)*C16	21	FC/PC60C	1185	34.8	25.6	15.00	12.50
	(Y*LC/T*8V/T*LV)*C20	21	FC/PC60C	1215	35.0	26.4	15.00	12.50
	(Y*9C/T*9V)*D20	24	FC/MC/PC60D	1225	35.0	26.4	15.00	12.50
	(Y*LC/T*8V/T*LV)*C16	21	UC48C	1210	34.6	26.0	15.00	12.50
	(Y*LC/T*8V/T*LV)*C20	21	UC48C	1155	34.6	26.0	15.00	12.50
	(Y*LC/T*8V/T*LV)*C16	21	UC60C	1195	34.4	25.6	15.00	12.50
	(Y*LC/T*8V/T*LV)*C20	21	UC60C	1215	34.4	25.6	15.00	12.50
YZF04213(C)	T*(8,L)X*C16	21	FC/MC62D	1360	41.0	27.8	15.00	12.50
	T*(8,L)X*C20	21	FC/MC62D	1485	41.5	28.8	15.00	12.50
	T*9X*C16	21	FC/MC62D	1460	41.5	28.6	15.00	12.50
	T*9X*C20	21	FC/MC62D	1460	41.5	28.8	15.00	12.50
	T*9X*D20	24	FC/MC62D	1425	41.5	28.8	15.00	12.50
	(Y*LC/T*8V/T*LV)*C16	21	FC/MC62D	1420	41.5	28.6	15.00	12.50
	(Y*LC/T*8V/T*LV)*C20	21	FC/MC62D	1365	41.0	27.6	15.00	12.50
	(Y*9C/T*9V)*D20	24	FC/MC62D	1455	41.5	28.6	15.00	12.50
YZF04813(C)	T*(8,L)X*C20	21	FC/MC62D	1665	47.0	35.8	15.00	12.50
	T*9X*C20	21	FC/MC62D	1595	46.5	34.8	15.00	12.50
	T*(8,L)X*C16	21	FC64D	1610	48.0	36.6	15.00	12.50
	T*(8,L)X*C20	21	FC64D	1665	48.0	36.8	15.00	12.50
	T*9X*C16	21	FC64D	1550	47.5	36.6	15.00	12.50
	T*9X*C20	21	FC64D	1595	48.0	36.8	15.00	12.50
	T*9X*D20	24	FC64D	1610	47.5	36.6	15.00	12.50
	(Y*LC/T*8V/T*LV)*C16	21	FC64D	1635	47.5	36.6	15.00	12.50
	(Y*LC/T*8V/T*LV)*C20	21	FC64D	1630	47.5	36.6	15.00	12.50
	(Y*9C/T*9V)*C16	21	FC64D	1590	47.5	36.4	15.00	12.50

1. MC coils available with a factory installed horizontal drain pan. See price pages for specific model number.
2. High Efficiency Motor Furnaces have B.O.D (Blower on Delay) standard.

PSC furnaces, such as the TG8S, TGLS, and TG9S, use Coil Only Ratings.

COOLING CAPACITY - With High Efficiency Motor Furnaces

UNIT MODEL	FURNACE		COIL MODEL[1]	COOLING					
	MODEL	WIDTH		STAGE	RATED CFM	NET MBH TOTAL	NET MBH SENS.	SEER	EER
16 SEER HP WITH HIGH EFFICIENCY FURNACES[2]									
YZF06013(C)	T*(8,L)X*C16	21	FC/MC62D	1	1115	46.5	29.8	15.00	20.80
				2	1610	55.5	39.0		11.65
	T*9X*C16	21	FC/MC62D	1	1085	46.5	29.8	15.00	20.80
				2	1550	55.5	39.0		11.60
	T*9X*C20	21	FC/MC62D	1	1220	47.5	31.2	15.00	20.35
				2	1595	55.5	38.5		11.70
	T*9X*D20	24	FC/MC62D	1	1240	48.0	31.4	15.00	20.50
				2	1610	55.0	38.5		11.50
	T*(8,L)X*C16	21	FC64D	1	1115	48.0	31.2	15.00	21.60
				2	1610	57.0	40.0		11.90
	T*(8,L)X*C20	21	FC64D	1	835	45.0	28.0	15.00	20.35
				2	1665	57.5	40.5		12.00
	T*9X*C16	21	FC64D	1	1085	48.0	31.2	15.00	21.60
				2	1550	57.0	40.0		11.85
	T*9X*C20	21	FC64D	1	1220	49.5	32.6	15.00	21.10
				2	1595	57.0	40.0		12.00
	T*9X*D20	24	FC64D	1	1240	49.5	32.8	15.00	21.25
				2	1610	57.0	40.0		11.85
	(Y*LC/T*8V/T*LV)*C16	21	FC/MC62D	1	1025	46.5	29.8	15.00	20.80
				2	1635	55.5	38.5		11.45
	(Y*LC/T*8V/T*LV)*C20	21	FC/MC62D	1	1060	46.5	29.8	15.00	20.80
				2	1620	55.5	39.0		11.60
	(Y*9C/T*9V)*C16	21	FC/MC62D	1	1040	46.5	29.8	15.00	20.80
				2	1590	55.5	38.5		11.40
	(Y*9C/T*9V)*C20	21	FC/MC62D	1	1040	46.5	29.8	15.00	20.80
				2	1655	55.0	38.5		11.25
	(Y*9C/T*9V)*D20	24	FC/MC62D	1	1085	46.5	29.8	15.00	20.80
				2	1630	55.5	38.5		11.35
	(Y*LC/T*8V/T*LV)*C16	21	FC64D	1	1025	48.0	31.2	15.00	21.60
				2	1635	57.0	40.0		11.75
	(Y*LC/T*8V/T*LV)*C20	21	FC64D	1	1060	48.0	31.2	15.00	21.60
				2	1630	57.0	40.0		11.85
	(Y*9C/T*9V)*C16	21	FC64D	1	1040	48.0	31.2	15.00	21.60
				2	1590	57.0	40.0		11.70
	(Y*9C/T*9V)*C20	21	FC64D	1	1040	48.0	31.2	15.00	21.60
				2	1655	56.5	40.0		11.50
	(Y*9C/T*9V)*D20	24	FC64D	1	1085	48.0	31.2	15.00	21.60
				2	1630	57.0	40.0		11.65

1. MC coils available with a factory installed horizontal drain pan. See price pages for specific model number.
2. High Efficiency Motor Furnaces have B.O.D (Blower on Delay) standard.

PSC furnaces, such as the TG8S, TGLS, and TG9S, use Coil Only Ratings.

HEATING CAPACITY - With Air Handler Coils

UNIT MODEL*	AIR HANDLER	COIL[1] MODEL	HEATING[2]							
			RATED CFM	47°F			17°F			HSPF
				MBH	COP	KW	MBH	COP	KW	STD
16 SEER HP WITH AIR HANDLERS										
YZF02413(C)	AHE24B	–	795	23.8	3.88	1.80	15.1	2.56	1.73	8.50
			515*	23.4	3.63	1.92	15.1	2.56	1.73	8.40
	AHE30B	–	795	23.8	3.88	1.80	15.1	2.56	1.73	8.50
			515*	23.4	3.63	1.92	15.1	2.56	1.73	8.40
	AHX30	–	835	24.0	3.88	1.83	15.1	2.56	1.73	8.50
			618*	23.8	3.63	1.92	15.1	2.56	1.73	8.50
	AHX36	–	820	24.0	3.90	1.82	15.1	2.62	1.69	8.50
			600*	23.8	3.65	1.91	15.1	2.62	1.69	8.50
	F6FP030	–	850	24.0	3.82	1.86	15.2	2.54	1.75	8.50
	F6FP036	–	855	24.0	3.90	1.80	15.1	2.58	1.71	8.50
	AV*36	–	725	23.8	3.92	1.78	14.8	2.66	1.63	9.00
	MV12B	FC/MC35B	800	24.0	3.82	1.84	15.0	2.54	1.73	8.50
	MV12B	FC/MC43B	800	24.0	4.02	1.76	14.9	2.70	1.62	9.00
	MX12B	FC/MC35B	815	23.8	3.92	1.78	14.8	2.60	1.67	9.00
	MX12B	FC/MC43B	735	23.8	3.90	1.79	14.8	2.64	1.64	9.00
YZF03013(C)	AHE36C	–	1000	29.4	4.02	2.14	19.0	2.78	2.00	9.00
			600*	29.1	3.73	2.28	19.0	2.78	2.00	8.80
	AHX36	–	1005	29.6	4.00	2.17	19.0	2.78	2.00	9.00
			755*	29.1	3.73	2.28	19.0	2.78	2.00	9.00
	AV*36	–	960	29.4	4.02	2.14	18.9	2.80	1.98	9.00
			725*	28.9	3.75	2.26	18.9	2.80	1.98	9.00
	MV12B	FC/MC43B	1000	29.6	3.94	2.20	19.1	2.74	2.04	9.00
	MV16C	FC/MC43C	1000	29.6	3.96	2.19	19.0	2.76	2.02	9.00
	MX12B	FC/MC43B	1095	29.8	4.04	2.16	19.1	2.78	2.01	9.00
			620*	29.1	3.73	2.28	19.0	2.78	2.00	8.80
YZF03613(C)	AHE42D	–	1180	35.6	3.98	2.62	23.2	2.78	2.45	9.00
			685*	35.0	3.40	3.29	23.2	2.80	2.43	8.80
	AHE48D	–	1195	35.0	3.90	2.62	23.2	2.76	2.45	9.00
	AHX42	–	1200	36.0	4.00	2.65	23.2	2.80	2.43	9.00
			1000*	36.0	3.40	3.29	23.2	2.80	2.43	9.00
	AHX48	–	1255	36.0	4.08	2.60	23.2	2.82	2.41	9.00
			1080*	36.0	3.40	3.24	23.2	2.82	2.41	9.00
	AV*48	–	1220	36.0	4.20	2.55	23.2	2.92	2.33	9.00
			960*	36.0	3.40	3.19	23.2	2.92	2.33	9.00
	F6FP042	–	1290	36.0	4.06	2.64	23.4	2.80	2.45	9.00
	F6FP048	–	1125	36.0	4.12	2.57	23.0	2.90	2.32	9.00
	MV12D	FC/MC48D	1160	36.0	3.98	2.65	23.2	2.80	2.43	9.00
			1000*	36.0	3.40	3.29	23.2	2.80	2.43	9.00
	MV16C	FC/MC48C	1200	36.0	3.92	2.71	23.4	2.76	2.48	9.00
			1000*	36.0	3.40	3.35	23.4	2.76	2.48	9.00
	MV12D	FC/MC60D	1135	36.0	4.10	2.60	23.2	2.86	2.38	9.00
			1000*	36.0	3.40	3.24	23.2	2.86	2.38	9.00
	MX12D	FC/MC48D	1225	35.6	3.96	2.63	23.2	2.80	2.43	9.00
			850*	35.0	3.40	3.29	23.2	2.80	2.43	8.80
	MX16C	FC/MC48C	1150	35.8	3.96	2.65	23.0	2.80	2.41	9.00
	MX12D	FC/MC60D	1275	35.6	4.20	2.48	23.2	2.88	2.36	9.00
			850*	35.0	3.40	3.29	23.2	2.80	2.43	8.80
YZF04213(C)	AHE60D	–	1390	37.6	3.88	2.84	25.0	2.70	2.71	9.00
	AHX60	–	1440	37.8	3.88	2.85	25.6	2.72	2.76	9.00
			1040*	37.1	3.65	2.73	25.6	2.72	2.76	8.78
	F6FP060	–	1475	38.0	3.86	2.88	25.4	2.68	2.78	9.00
	MV20D	FC/MC62D	1400	37.8	3.86	2.87	25.2	2.68	2.76	9.00
			1020*	37.1	3.63	2.75	25.2	2.68	2.76	8.78
	MX20D	FC/MC62D	1470	39.5	4.08	2.84	25.2	2.74	2.69	9.00

For notes, see Page 10.

HEATING CAPACITY - With Air Handler Coils (Continued)

UNIT MODEL*	AIR HANDLER	COIL[1] MODEL	HEATING[2]							
			RATED CFM	47°F			17°F			HSPF
				MBH	COP	KW	MBH	COP	KW	STD
16 SEER HP WITH AIR HANDLERS										
YZF04813(C)	AHE60D	–	1565	47.0	3.80	3.62	33.4	2.70	3.62	9.00
			1160*	46.8	3.33	4.30	33.4	2.72	3.60	8.80
	AHX60	–	1570	48.0	3.82	3.84	33.4	2.72	3.60	9.00
			985*	48.0	3.33	4.30	33.4	2.72	3.60	9.00
	F6FP060	–	1570	48.0	3.82	3.84	33.4	2.72	3.60	9.00
	MV20D	FC/MC62D	1630	48.0	3.78	3.91	33.6	2.70	3.65	9.00
			1000*	48.0	3.29	4.38	33.6	2.70	3.65	9.00
	MV20D	FC64D	1630	48.0	3.94	3.79	34.0	2.78	3.58	9.00
			1000*	48.0	3.45	4.26	34.0	2.78	3.58	9.00
	MX20D	FC/MC62D	1605	47.0	3.86	3.57	33.2	2.76	3.52	9.00
	MX20D	FC64D	1605	47.0	3.98	3.46	33.6	2.82	3.49	9.00

1. Rated CFM same as for cooling.
2. Heating MBH based on AHRI standards of 70 °F DB (Dry Bulb) entering indoor air, 72% RH (Relative Humidity) outdoor air with 25 feet of interconnecting piping and no supplemental electric heat operation.

* Notates “Hot Heat Pump” performance. These ratings are not AHRI Listed.

COP equals MBH output divided by (total KW input x 3.412).

HSPF (Heating Seasonal Performance Factor) is the total heating output during a normal annual usage period for heating divided by the total electric power input during the same period.

MA Modular Air Handlers use Coil Only Ratings.

— = Not Applicable.

HEATING CAPACITY - With Air Handler Coils

UNIT MODEL	AIR HANDLER MODEL	COIL[1] MODEL	HEATING[2]					
			STAGE	RATED CFM	NET MBH		HSPF	COP @ 47
					47 OD	17 OD		
16 SEER HP WITH AIR HANDLERS								
YZF06013(C)	AHE60D	–	1	1160	42.5	–	–	3.46
			2	1835	58.0	39.0	9.00	3.80
			2	1160*	57.0	38.5	8.60	3.28
	AHX60	–	1	1255	42.5	–	–	3.56
			2	1930	58.0	38.5	9.00	3.80
			2	1255*	58.0	38.5	9.00	3.40
	MV20D	FC/MC62D	1	1075	41.5	–	–	3.42
			2	1630	58.0	38.0	9.00	3.72
			2	1075*	57.5	38.5	9.00	3.24
	MV20D	FC64D	1	1075	42.0	–	–	3.52
			2	1630	58.0	38.0	9.00	3.82
			2	1075*	58.0	38.5	9.00	3.32
	MX20D	FC/MC62D	1	1390	43.0	–	–	3.62
			2	1795	58.0	38.5	9.00	3.80
			2	1390*	57.0	38.5	8.6	3.52
	MX20D	FC64D	1	1390	44.0	–	–	3.72
			2	1795	58.0	39.0	9.00	3.94
			2	1390*	57.0	39.0	8.6	3.62

1. Rated CFM same as for cooling.
2. Heating MBH based on AHRI standards of 70 °F DB (Dry Bulb) entering indoor air, 72% RH (Relative Humidity) outdoor air with 25 feet of interconnecting piping and no supplemental electric heat operation.

* Notates “Hot Heat Pump” performance. These ratings are not AHRI Listed.

COP equals MBH output divided by (total KW input x 3.412).

HSPF (Heating Seasonal Performance Factor) is the total heating output during a normal annual usage period for heating divided by the total electric power input during the same period.

MA Modular Air Handlers use Coil Only Ratings.

— = Not Applicable.

HEATING CAPACITY - With Upflow, Downflow, & Horizontal Furnaces and Coils (Coil Only Ratings)

UNIT MODEL	COIL[1] MODEL	HEATING[2]						
		47°F			17°F			HSPF
		MBH	COP	KW	MBH	COP	KW	STD
YZF02413(C)	FC/MC/PC35	23.6	3.56	1.94	15.6	2.38	1.92	7.80
	FC/MC/PC37	23.6	3.70	1.87	15.5	2.50	1.82	7.80
	FC/MC/PC43	23.6	3.70	1.87	15.5	2.50	1.82	7.80
YZF03013(C)	FC/MC/PC37	29.6	3.74	2.32	19.7	2.62	2.20	8.20
	FC/MC/PC43	29.6	3.74	2.32	19.7	2.62	2.20	8.20
YZF03613(C)	FC/MC/PC48	35.6	3.70	2.82	24.0	2.62	2.68	7.80
	FC/MC/PC60	35.6	3.86	2.70	23.8	2.72	2.56	7.80
YZF04213(C)	FC/MC62	40.0	3.78	3.10	25.8	2.54	2.98	7.80
YZF04813(C)	FC/MC62	47.0	3.64	3.78	34.2	2.60	3.85	7.80
	FC64	47.0	3.76	3.66	34.8	2.66	3.83	7.80

1. Rated CFM same as for cooling.
2. Heating MBH based on ARI standards of 70 °F DB (Dry Bulb) entering indoor air, 72% RH (Relative Humidity) outdoor air with 25 feet of interconnecting piping and no supplemental electric heat operation.

COP equals MBH output divided by (total KW input x 3.412).

HSPF (Heating Seasonal Performance Factor) is the total heating output during a normal annual usage period for heating divided by the total electric power input during the same period.

MA Modular Air Handlers use Coil Only Ratings.

PSC furnaces, such as the TG8S, TGLS, and TG9S, use Coil Only Ratings.

— = Not Applicable.

HEATING CAPACITY - With Upflow, Downflow, & Horizontal Furnaces and Coils (Coil Only Ratings)

UNIT MODEL*	COIL[1] MODEL	HEATING[2]					
		STAGE	RATED CFM	NET MBH		HSPF	COP @ 47
				47 OD	17 OD		
YZF06013(C)	FC/MC62	1	1350	43.5	–	–	3.42
		2	1800	58.0	39.0	9.0	3.66
		2	1350	57.0	0.0	8.6	3.36
	FC64	1	1350	44.0	–	–	3.52
		2	1800	58.0	39.0	9.0	3.76
		2	1350	57.0	0.0	8.6	3.44

1. Rated CFM same as for cooling.
2. Heating MBH based on AHRI standards of 70° DB (Dry Bulb) entering indoor air, 72% RH (Relative Humidity) outdoor air with 25 feet of interconnecting piping and no supplemental electric heat operation.

COP equals MBH output divided by (total KW input x 3.412).

HSPF (Heating Seasonal Performance Factor) is the total heating output during a normal annual usage period for heating divided by the total electric power input during the same period.

MA Modular Air Handlers use coil only ratings.

PSC furnaces, such as the TG8S, TGLS, and TG9S, use Coil Only Ratings.

— = Not Applicable.

HEATING CAPACITY - With High Efficiency Motor Furnaces

MODEL	FURNACE MODEL	COIL[1] MODEL	HEATING[2]							
			RATED CFM	47°F			17°F			HSPF
				MBH	COP	KW	MBH	COP	KW	STD
16 SEER HP WITH HIGH EFFICIENCY MOTOR FURNACES[3]										
YZF02413(C)	T*(8,L)X*A12	FC/MC/PC32A	800	23.8	3.92	1.78	14.9	2.60	1.68	8.50
			530	23.3	3.67	1.87	14.9	2.60	1.68	8.50
	T*(8,L)X*B12	FC/MC/PC35B	850	24.0	3.98	1.77	14.9	2.62	1.67	8.50
			675	23.8	3.73	1.86	14.9	2.62	1.67	8.50
	T*(8,L)X*C16	FC/MC/PC35C	865	24.0	3.98	1.77	14.9	2.62	1.67	8.50
			625	23.8	3.73	1.86	14.9	2.62	1.67	8.50
	T*(8,L)X*C20	FC/MC/PC35C	885	24.0	3.92	1.79	15.0	2.60	1.69	8.50
	T*9X*B12	FC/MC/PC35B	785	23.8	3.84	1.82	15.0	2.56	1.72	8.50
			620	23.6	3.59	1.91	15.0	2.56	1.72	8.50
	T*9X*C16	FC/MC/PC35C	765	23.8	3.80	1.84	15.0	2.54	1.73	8.50
			610	23.3	3.55	1.93	15.0	2.54	1.73	8.50
	T*9X*C20	FC/MC/PC35C	825	24.0	3.94	1.78	15.0	2.60	1.69	8.50
	T*(8,L)X*A12	FC/MC/PC37A	840	24.0	4.08	1.72	14.8	2.74	1.58	9.00
			640	23.8	3.83	1.81	14.8	2.74	1.58	9.00
	T*(8,L)X*B12	FC/MC/PC43B	865	24.0	4.10	1.72	14.8	2.74	1.58	9.00
			700	23.8	3.85	1.81	14.8	2.74	1.58	9.00
	T*(8,L)X*C16	FC/MC/PC43C	855	24.0	4.10	1.72	14.8	2.74	1.58	9.00
			655	23.8	3.85	1.81	14.8	2.74	1.58	9.00
	T*(8,L)X*C20	FC/MC/PC43C	815	24.0	4.06	1.73	14.9	2.72	1.61	9.00
	(Y*LC/T*8V/T*LV)*A12	FC/MC/PC32A	755	24.0	3.76	1.87	15.1	2.52	1.76	8.50
			590	23.8	3.51	1.96	15.1	2.52	1.76	8.50
	(Y*LC/T*8V/T*LV)*B12	FC/MC/PC35B	785	24.0	3.80	1.85	15.1	2.52	1.76	8.50
			515	23.8	3.55	1.94	15.1	2.52	1.76	8.50
	(Y*LC/T*8V/T*LV)*C16	FC/MC/PC35C	775	23.8	3.80	1.84	15.0	2.54	1.73	8.50
	(Y*LC/T*8V/T*LV)*C20	FC/MC/PC35C	755	23.8	3.78	1.84	15.0	2.52	1.74	8.50
	(Y*9C/T*9V)*B12	FC/MC/PC35B	815	24.0	3.86	1.84	15.1	2.56	1.73	8.50
			550	23.8	3.61	1.93	15.1	2.56	1.73	8.50
	(Y*9C/T*9V)*C16	FC/MC/PC35C	900	24.0	3.92	1.81	15.1	2.56	1.73	8.50
			645	23.8	3.67	1.90	15.1	2.56	1.73	8.50
	(Y*9C/T*9V)*C20	FC/MC/PC35C	755	23.8	3.78	1.84	15.0	2.52	1.74	8.50
	(Y*LC/T*8V/T*LV)*A12	FC/MC/PC37A	765	24.0	3.90	1.80	15.0	2.62	1.68	8.50
			585	23.8	3.65	1.89	15.0	2.62	1.68	8.50
	(Y*LC/T*8V/T*LV)*B12	FC/MC/PC43B	790	24.0	3.92	1.79	15.0	2.64	1.66	9.00
			515	23.8	3.67	1.88	15.0	2.64	1.66	9.00
	(Y*LC/T*8V/T*LV)*C16	FC/MC/PC43C	770	24.0	3.92	1.79	14.9	2.64	1.65	9.00
			645	23.8	3.67	1.88	14.9	2.64	1.65	9.00
	(Y*LC/T*8V/T*LV)*C20	FC/MC/PC43C	740	23.8	3.88	1.80	14.9	2.62	1.67	9.00
	(Y*9C/T*9V)*B12	FC/MC/PC43B	800	24.0	3.98	1.78	15.0	2.66	1.65	8.50
			550	23.8	3.73	1.87	15.0	2.66	1.65	8.50
	(Y*9C/T*9V)*C16	FC/MC/PC43C	810	24.0	4.02	1.76	14.9	2.68	1.63	9.00
	(Y*9C/T*9V)*C20	FC/MC/PC43C	890	24.0	4.04	1.77	15.0	2.66	1.65	9.00
YZF03013(C)	T*(8,L)X*A12	FC/MC/PC37A	1090	30.0	4.06	2.17	19.2	2.80	2.01	9.00
			605	29.5	3.79	2.28	19.2	2.80	2.01	9.00
	T*(8,L)X*B12	FC/MC/PC43B	1090	30.0	4.06	2.17	19.2	2.80	2.01	9.00
			660	29.5	3.79	2.28	19.2	2.80	2.01	9.00
	T*(8,L)X*C16	FC/MC/PC43C	955	29.4	3.96	2.18	18.9	2.78	1.99	9.00
			710	28.9	3.69	2.29	18.9	2.78	1.99	9.00
	T*(8,L)X*C20	FC/MC/PC43C	870	29.0	3.86	2.20	18.8	2.76	2.00	9.00
			780	28.5	3.59	2.31	18.8	2.76	2.00	9.00
	T*9X*B12	FC/MC/PC43B	1095	29.8	4.08	2.14	19.2	2.80	2.01	9.00
			775	29.3	3.81	2.25	19.2	2.80	2.01	9.00

For notes, see Page 15.

HEATING CAPACITY - With High Efficiency Motor Furnaces (Continued)

MODEL	FURNACE MODEL	COIL[1] MODEL	HEATING[2]							
			RATED CFM	47°F			17°F			HSPF
				MBH	COP	KW	MBH	COP	KW	STD
16 SEER HP WITH HIGH EFFICIENCY MOTOR FURNACES[3]										
YZF03013(C)	T*9X*C16	FC/MC/PC43C	1055	29.8	4.10	2.13	19.1	2.82	1.98	9.00
			695	29.3	3.83	2.24	19.1	2.82	1.98	9.00
	(Y*LC/T*8V/T*LV)*A12	FC/MC/PC37A	950	29.6	3.86	2.25	19.2	2.70	2.08	9.00
			630	29.1	3.59	2.36	19.2	2.70	2.08	9.00
	(Y*LC/T*8V/T*LV)*B12	FC/MC/PC43B	1045	29.8	3.92	2.23	19.2	2.74	2.05	9.00
			715	29.3	3.65	2.34	19.2	2.74	2.05	9.00
	(Y*LC/T*8V/T*LV)*C16	FC/MC/PC43C	1035	29.6	4.00	2.17	19.0	2.78	2.00	9.00
			695	29.1	3.73	2.28	19.0	2.78	2.00	9.00
	(Y*LC/T*8V/T*LV)*C20	FC/MC/PC43C	1025	29.4	4.04	2.13	18.9	2.80	1.98	9.00
			690	28.9	3.77	2.25	18.9	2.80	1.98	9.00
	(Y*9C/T*9V)*B12	FC/MC/PC43B	1035	30.0	3.88	2.27	19.3	2.70	2.09	9.00
			670	29.5	3.61	2.38	19.3	2.70	2.09	9.00
	(Y*9C/T*9V)*C16	FC/MC/PC43C	1030	29.8	3.92	2.23	19.2	2.74	2.05	9.00
			680	29.3	3.65	2.34	19.2	2.74	2.05	9.00
	(Y*9C/T*9V)*C20	FC/MC/PC43C	995	29.6	3.94	2.20	19.1	2.74	2.04	9.00
			675	29.1	3.67	2.31	19.1	2.74	2.04	9.00
YZF03613(C)	T*(8,L)X*C16	FC/MC/PC48C	1185	36.0	3.98	2.65	23.2	2.80	2.43	9.00
			1000	36.0	3.38	3.29	23.2	2.80	2.43	9.00
	T*(8,L)X*C20	FC/MC/PC48C	1270	36.0	4.04	2.63	23.4	2.82	2.43	9.00
			1000	36.0	3.44	3.27	23.4	2.82	2.43	9.00
	T*9X*C16	FC/MC/PC48C	1280	36.0	3.98	2.68	23.4	2.78	2.47	9.00
			1000	36.0	3.38	3.32	23.4	2.78	2.47	9.00
	T*9X*C20	FC/MC/PC48C	1205	36.0	3.92	2.71	23.4	2.74	2.50	9.00
			1000	36.0	3.32	3.35	23.4	2.74	2.50	9.00
	T*9X*D20	FC/MC/PC48D	1240	36.0	4.02	2.65	23.4	2.80	2.45	9.00
			1000	36.0	3.42	3.29	23.4	2.80	2.45	9.00
	T*(8,L)X*C16	FC/PC60C	1190	36.0	4.16	2.55	23.0	2.92	2.31	9.00
			1000	36.0	3.56	3.19	23.0	2.92	2.31	9.00
	T*(8,L)X*C20	FC/PC60C	1275	36.6	4.22	2.54	23.2	2.92	2.33	9.00
			1000	36.0	3.62	3.18	23.2	2.92	2.33	9.00
	T*9X*C16	FC/PC60C	1315	36.0	4.20	2.57	23.2	2.86	2.38	9.00
			1000	36.0	3.60	3.21	23.2	2.86	2.38	9.00
	T*9X*C20	FC/PC60C	1240	36.0	4.18	2.57	23.2	2.90	2.34	9.00
			1000	36.0	3.58	3.21	23.2	2.90	2.34	9.00
	T*9X*D20	FC/MC/PC60D	1310	36.0	4.28	2.51	23.0	2.92	2.31	9.00
			1000	36.0	3.68	3.15	23.0	2.92	2.31	9.00
	T*(8,L)X*C16	UC48C	1185	36.0	4.16	2.55	23.0	2.90	2.32	9.00
			1000	36.0	3.56	3.19	23.0	2.90	2.32	9.00
	T*(8,L)X*C20	UC48C	1270	36.0	4.16	2.56	23.2	2.90	2.34	9.00
			1000	36.0	3.56	3.20	23.2	2.90	2.34	9.00
	T*9X*C16	UC48C	1280	36.0	4.10	2.62	23.4	2.86	2.40	9.00
			1000	36.0	3.50	3.26	23.4	2.86	2.40	9.00
	T*9X*C20	UC48C	1205	36.0	4.08	2.61	23.2	2.86	2.38	9.00
			1000	36.0	3.48	3.25	23.2	2.86	2.38	9.00
	T*9X*D20	UC48D	1240	36.0	4.10	2.60	23.2	2.86	2.38	9.00
			1000	36.0	3.50	3.24	23.2	2.86	2.38	9.00
	T*(8,L)X*C16	UC60C	1190	36.0	4.16	2.55	22.8	2.86	2.34	9.00
			1000	36.0	3.56	3.19	22.8	2.86	2.34	9.00

For notes, see Page15.

HEATING CAPACITY - With High Efficiency Motor Furnaces (Continued)

MODEL	FURNACE MODEL	COIL[1] MODEL	HEATING[2]							
			RATED CFM	47°F			17°F			HSPF
				MBH	COP	KW	MBH	COP	KW	STD
16 SEER HP WITH HIGH EFFICIENCY MOTOR FURNACES[3]										
YZF03613(C)	T*(8,L)X*C20	UC60C	1275	36.0	4.16	2.56	23.0	2.86	2.36	9.00
			1000	36.0	3.56	3.20	23.0	2.86	2.36	9.00
	T*9X*C16	UC60C	1300	36.0	4.14	2.59	23.0	2.84	2.37	9.00
			1000	36.0	3.54	3.23	23.0	2.84	2.37	9.00
	T*9X*C20	UC60C	1240	36.0	4.08	2.61	23.0	2.82	2.39	9.00
			1000	36.0	3.48	3.25	23.0	2.82	2.39	9.00
	T*9X*D20	UC60D	1310	36.0	4.22	2.53	23.0	2.88	2.34	9.00
			1000	36.0	3.62	3.17	23.0	2.88	2.34	9.00
	(Y*LC/T*8V/T*LV)*C16	FC/MC/PC48C	1195	36.0	3.90	2.72	23.4	2.74	2.50	9.00
			1000	36.0	3.30	3.36	23.4	2.74	2.50	9.00
	(Y*LC/T*8V/T*LV)*C20	FC/MC/PC48C	1150	36.0	3.92	2.71	23.4	2.76	2.48	9.00
			1000	36.0	3.32	3.35	23.4	2.76	2.48	9.00
	(Y*9C/T*9V)*D20	FC/MC/PC48D	1240	36.0	3.96	2.69	23.4	2.76	2.48	9.00
			1000	36.0	3.36	3.33	23.4	2.76	2.48	9.00
	(Y*LC/T*8V/T*LV)*C16	FC/PC60C	1185	36.0	4.12	2.59	23.2	2.88	2.36	9.00
			1000	36.0	3.52	3.23	23.2	2.88	2.36	9.00
	(Y*LC/T*8V/T*LV)*C20	FC/PC60C	1215	36.0	4.14	2.59	23.2	2.88	2.36	9.00
			1000	36.0	3.54	3.23	23.2	2.88	2.36	9.00
	(Y*9C/T*9V)*D20	FC/MC/PC60D	1225	36.0	4.12	2.62	23.4	2.86	2.40	9.00
			1000	36.0	3.52	3.26	23.4	2.86	2.40	9.00
	(Y*LC/T*8V/T*LV)*C16	UC48C	1210	36.0	4.06	2.63	23.4	2.84	2.41	9.00
			1000	36.0	3.46	3.27	23.4	2.84	2.41	9.00
	(Y*LC/T*8V/T*LV)*C20	UC48C	1155	36.0	4.10	2.60	23.2	2.86	2.38	9.00
			1000	36.0	3.50	3.24	23.2	2.86	2.38	9.00
	(Y*LC/T*8V/T*LV)*C16	UC60C	1195	36.0	4.08	2.61	23.0	2.82	2.39	9.00
			1000	36.0	3.48	3.25	23.0	2.82	2.39	9.00
	(Y*LC/T*8V/T*LV)*C20	UC60C	1215	36.0	4.06	2.63	23.0	2.82	2.39	9.00
			1000	36.0	3.46	3.27	23.0	2.82	2.39	9.00
YZF04213(C)	T*(8,L)X*C16	FC/MC62D	1360	37.6	3.86	2.85	25.2	2.70	2.73	9.00
			1020	36.9	3.63	2.73	25.2	2.70	2.73	8.78
	T*(8,L)X*C20	FC/MC62D	1485	37.8	3.90	2.84	25.2	2.70	2.73	9.00
			1020	37.1	3.67	2.72	25.2	2.70	2.73	8.78
	T*9X*C16	FC/MC62D	1460	38.0	3.86	2.88	25.4	2.66	2.80	8.50
			1020	37.3	3.63	2.76	25.4	2.66	2.80	8.28
	T*9X*C20	FC/MC62D	1460	37.8	3.90	2.84	25.2	2.70	2.73	9.00
			1020	37.1	3.67	2.72	25.2	2.70	2.73	8.78
	T*9X*D20	FC/MC62D	1425	37.8	3.90	2.84	25.2	2.70	2.73	9.00
			1020	37.1	3.67	2.72	25.2	2.70	2.73	8.78
	(Y*LC/T*8V/T*LV)*C16	FC/MC62D	1420	38.0	3.82	2.91	25.6	2.64	2.84	8.50
			1020	37.3	3.59	2.79	25.6	2.64	2.84	8.28
	(Y*LC/T*8V/T*LV)*C20	FC/MC62D	1365	37.8	3.80	2.91	25.4	2.64	2.82	8.50
			1020	37.1	3.57	2.79	25.4	2.64	2.82	8.28
	(Y*9C/T*9V)*D20	FC/MC62D	1455	38.0	3.82	2.91	25.6	2.64	2.84	8.50
			1020	37.3	3.59	2.79	25.6	2.64	2.84	8.28

For notes, see Page 15.

HEATING CAPACITY - With High Efficiency Motor Furnaces (Continued)

MODEL	FURNACE MODEL	COIL[1] MODEL	HEATING[2]							
			RATED CFM	47°F			17°F			HSPF
				MBH	COP	KW	MBH	COP	KW	STD
16 SEER HP WITH HIGH EFFICIENCY MOTOR FURNACES[3]										
YZF04813(C)	T*(8,L)X*C20	FC/MC62D	1665	48.0	3.84	3.89	33.8	2.70	3.67	9.00
			1200	48.0	3.43	4.29	33.8	2.70	3.67	9.00
	T*9X*C20	FC/MC62D	1595	48.0	3.76	3.94	33.6	2.68	3.67	9.00
			1200	48.0	3.35	4.34	33.6	2.68	3.67	9.00
	T*(8,L)X*C16	FC64D	1610	48.0	3.90	3.83	34.2	2.76	3.63	9.00
			1000	48.0	3.41	4.29	34.2	2.76	3.63	9.00
	T*(8,L)X*C20	FC64D	1665	48.0	3.92	3.81	34.0	2.76	3.61	9.00
			1200	48.0	3.51	4.21	34.0	2.76	3.61	9.00
	T*9X*C16	FC64D	1550	48.0	3.88	3.85	34.2	2.74	3.66	9.00
			1000	48.0	3.39	4.31	34.2	2.74	3.66	9.00
	T*9X*C20	FC64D	1595	48.0	3.92	3.81	34.0	2.76	3.61	9.00
			1200	48.0	3.51	4.21	34.0	2.76	3.61	9.00
	T*9X*D20	FC64D	1610	48.0	3.88	3.85	34.2	2.74	3.66	9.00
			1200	48.0	3.47	4.25	34.2	2.74	3.66	9.00
	(Y*LC/T*8V/T*LV)*C16	FC64D	1635	48.0	3.86	3.87	34.4	2.72	3.71	9.00
			1000	48.0	3.37	4.33	34.4	2.72	3.71	9.00
	(Y*LC/T*8V/T*LV)*C20	FC64D	1630	48.0	3.88	3.85	34.2	2.74	3.66	9.00
			1000	48.0	3.39	4.31	34.2	2.74	3.66	9.00
	(Y*9C/T*9V)*C16	FC64D	1590	48.0	3.84	3.93	34.4	2.72	3.71	9.00
			1000	48.0	3.35	4.39	34.4	2.72	3.71	9.00

1. MC coils available with a factory installed horizontal drain pan. See price pages for specific model number.
2. Heating MBH based on AHRI standards of 70 °F DB (Dry Bulb) entering indoor air, 72% RH (Relative Humidity) outdoor air with 25 feet of interconnecting piping and no supplemental electric heat operation.
3. High Efficiency Motor Furnaces have B.O.D (Blower on Delay) standard.

* Notates “Hot Heat Pump” performance. These ratings are not AHRI Listed.

COP equals MBH output divided by (total KW input x 3.412).

HSPF (Heating Seasonal Performance Factor) is the total heating output during a normal annual usage period for heating divided by the total electric power input during the same period.

PSC furnaces, such as the TG8S, TGLS, and TG9S, use Coil Only Ratings.

— = Not Applicable.

HEATING CAPACITY - With High Efficiency Motor Furnaces

UNIT MODEL	FURNACE MODEL	COIL MODEL[1]	HEATING[2]					
			STAGE	RATED CFM	NET MBH		HSPF	COP @ 47
					47 OD	17 OD		
16 SEER HP WITH HIGH EFFICIENCY MOTOR FURNACES[3]								
YZF06013(C)	T*(8,L)X*C16	FC/MC62D	1	1115	41.5	–	–	3.38
			2	1610	58.0	38.0	9.00	3.68
			2	1115	57.5	38.5	9.00	3.20
	T*9X*C16	FC/MC62D	1	1085	42.0	–	–	3.38
			2	1550	58.0	38.5	9.00	3.68
			2	1085	57.5	38.5	9.00	3.20
	T*9X*C20	FC/MC62D	1	1220	42.5	–	–	3.52
			2	1595	58.0	38.0	9.00	3.68
			2	1220	58.0	38.5	9.00	3.38
	T*9X*D20	FC/MC62D	1	1240	42.5	–	–	3.54
			2	1610	58.0	38.5	9.00	3.66
			2	1240	58.0	38.5	9.00	3.40
	T*(8,L)X*C16	FC64D	1	1115	42.5	–	–	3.48
			2	1610	58.0	38.5	9.00	3.80
			2	1115	58.0	39.0	9.00	3.30

For notes, see Page 17.

HEATING CAPACITY - With High Efficiency Motor Furnaces (Continued)

UNIT MODEL	FURNACE MODEL	COIL MODEL[1]	HEATING[2]					
			STAGE	RATED CFM	NET MBH		HSPF	COP @ 47
					47 OD	17 OD		
16 SEER HP WITH HIGH EFFICIENCY MOTOR FURNACES[3]								
YZF06013(C)	T*(8,L)X*C20	FC64D	1	835	41.0	–	–	3.16
			2	1665	58.0	38.5	9.00	3.84
			2	835	56.5	39.0	8.75	2.92
	T*9X*C16	FC64D	1	1085	42.5	–	–	3.48
			2	1550	58.0	38.5	9.00	3.78
			2	1085	58.0	39.0	9.00	3.30
	T*9X*C20	FC64D	1	1220	42.5	–	–	3.60
			2	1595	58.0	38.5	9.00	3.78
			2	1220	58.0	39.0	9.00	3.48
	T*9X*D20	FC64D	1	1240	42.5	–	–	3.64
			2	1610	58.0	38.5	9.00	3.76
			2	1240	58.0	39.0	9.00	3.48
	(Y*LC/T*8V/T*LV)*C16	FC/MC62D	1	1025	41.5	–	–	3.38
			2	1635	58.0	38.5	9.00	3.66
			2	1025	57.5	38.5	9.00	3.20
	(Y*LC/T*8V/T*LV)*C20	FC/MC62D	1	1060	42.0	–	–	3.38
			2	1620	58.0	38.5	9.00	3.68
			2	1060	57.5	38.5	9.00	3.20
	(Y*9C/T*9V)*C16	FC/MC62D	1	1040	42.0	–	–	3.36
			2	1590	58.0	38.5	9.00	3.64
			2	1040	57.5	38.5	9.00	3.20
	(Y*9C/T*9V)*C20	FC/MC62D	1	1040	42.0	–	–	3.36
			2	1655	58.0	38.5	9.00	3.62
			2	1040	57.5	38.5	9.00	3.20
	(Y*9C/T*9V)*D20	FC/MC62D	1	1085	42.0	–	–	3.36
			2	1630	58.0	38.5	9.00	3.64
			2	1085	57.5	38.5	9.00	3.20
	(Y*LC/T*8V/T*LV)*C16	FC64D	1	1025	42.5	–	–	3.48
			2	1635	58.0	38.5	9.00	3.76
			2	1025	58.0	39.0	9.00	3.30
	(Y*LC/T*8V/T*LV)*C20	FC64D	1	1060	42.5	–	–	3.48
			2	1630	58.0	38.5	9.00	3.78
			2	1060	58.0	39.0	9.00	3.30
	(Y*9C/T*9V)*C16	FC64D	1	1040	42.5	–	–	3.46
			2	1590	58.0	38.5	9.00	3.74
			2	1040	58.0	39.0	9.00	3.28
	(Y*9C/T*9V)*C20	FC64D	1	1040	42.5	–	–	3.46
			2	1655	58.0	39.0	9.00	3.72
			2	1040	58.0	39.0	9.00	3.28
	(Y*9C/T*9V)*D20	FC64D	1	1085	42.5	–	–	3.46
			2	1630	58.0	38.5	9.00	3.74
			2	1085	58.0	39.0	9.00	3.28

1. Rated CFM same as for cooling.
2. Heating MBH based on AHRI standards of 70 °F DB (Dry Bulb) entering indoor air, 72% RH (Relative Humidity) outdoor air with 25 feet of interconnecting piping and no supplemental electric heat operation.
3. High Efficiency Motor Furnaces have B.O.D (Blower on Delay) standard.

COP equals MBH output divided by (total KW input x 3.412).

HSPF (Heating Seasonal Performance Factor) is the total heating output during a normal annual usage period for heating divided by the total electric power input during the same period.

PSC furnaces, such as the TG8S, TGLS, and TG9S, use Coil Only Ratings.

— = Not Applicable.

ACCESSORIES

TXV Kits - S1-1TVM series thermal expansion valves precisely meter refrigerant for optimum performance over a wide range of conditions. See System Charge table for TXV part number for each model

Start Assist Kit - (S1-2SA067) Provides increased starting torque for areas with low voltage. See Hard Start Kit Accessory Installation Manual for Hard Start Kit part number for each model.

Temperature Sensor (S1-37309243000) - The temperature sensor is used to sense plenum temperature, and is optional with a gas or oil back-up heat source. Compatible only with 13 SEER and higher heat pumps.

Dehumidistat (S1-2HU16700124) - Provides increased dehumidification when matched with variable speed furnace or air handler.

Heat Pump Risers - (S1-52635389000, S1-52635390000, S1-52635391000) - 3", 6", or 12" risers mount easily in composite base pan recesses, ensuring the unit stays clear of snow and ice build-up in harsh winter weather.

Thermostats - Compatible thermostat controls are available through accessory sourcing. For optimum performance, these outdoor units are fully compatiable with the Residential Touch Screen Communicating Control S1-TTSCC01.

SOUND POWER LEVEL - TYPICAL OCTAVE BAND SPECTRUM (without tone adjustment)

Size	Test Condition	63	125	250	500	1000	2000	4000	8000	dBA	SQI
24	Cooling Mode	72	76	69	67	67	62	58	53	71	19.1
	Heating Mode	71	79	70	68	67	62	58	55	71	19.0
30	Cooling Mode	73	70	67	68	69	61	55	48	71	19.1
	Heating Mode	76	72	69	69	66	61	57	60	71	19.1
36	Cooling Mode	75	79	70	69	67	61	56	49	72	19.1
	Heating Mode	71	80	64	61	62	58	54	53	68	19.0
42	Cooling Mode	72	75	70	71	65	62	58	51	71	19.0
	Heating Mode	72	76	69	68	64	59	57	57	70	19.1
48	Cooling Mode	77	78	72	70	66	61	56	50	72	19.1
	Heating Mode	75	82	73	72	66	61	58	54	73	19.1
60	Cooling Mode - Stage 1	75	75	70	68	64	61	56	50	70	19.2
	Heating Mode - Stage 1	75	76	69	68	66	60	56	51	70	19.1
60	Cooling Mode - Stage 2	73	78	69	68	64	61	56	50	70	19.2
	Heating Mode - Stage 2	72	81	70	69	66	63	58	51	72	19.2

Rated in accordance with ARI Standard 270.

TYPICAL INSTALLATION

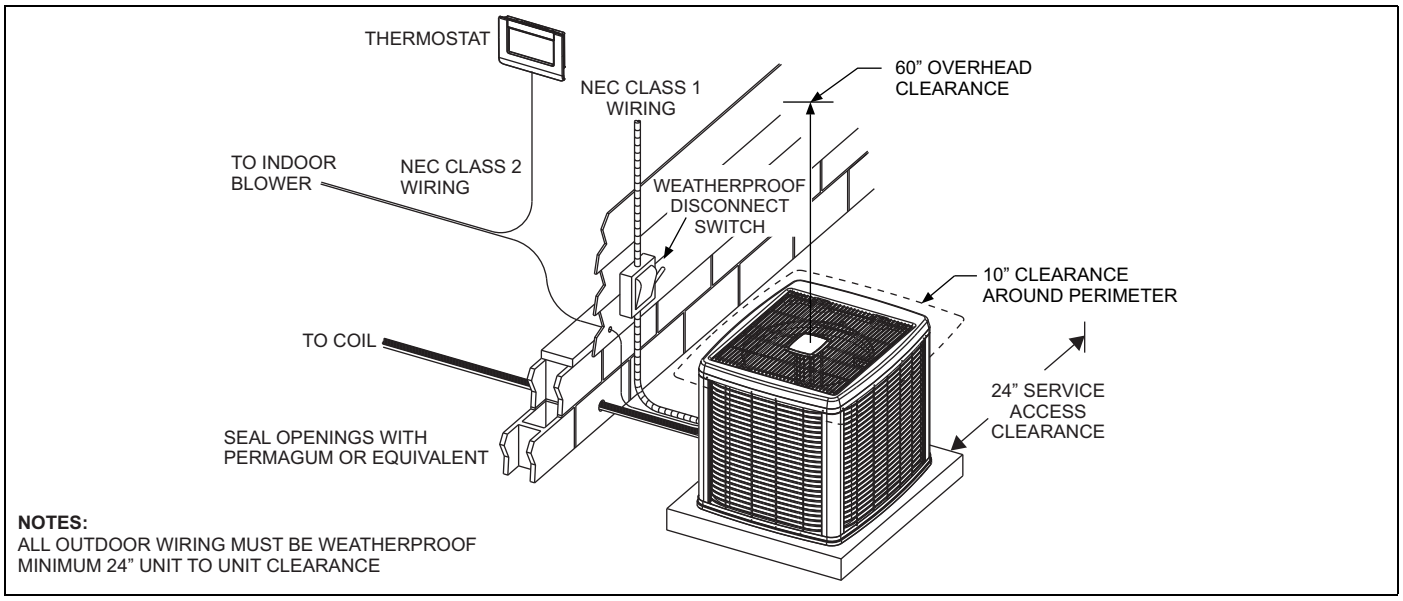

COOLING PERFORMANCE DATA																
OUTDOOR UNIT MODEL NO.		YZF02413(C)														
INDOOR COIL MODEL NO.		AHX30														
CONDENSER ENTERING AIR TEMPERATURE	ID CFM	635					835					1035				
	ID DB (°F)	80	80	75	80	80	80	80	75	80	80	80	80	75	80	80
	ID WB (°F)	57	62	62	67	72	57	62	62	67	57	62	62	67	72	57
65	T.C.	21.7	24.2	24.1	26.2	28.4	23.9	25.3	25.2	27.3	29.5	26.1	26.4	26.3	28.5	30.5
	S.C.	21.7	20.6	17.8	17.8	14.8	23.9	23.6	19.7	19.6	15.7	26.1	26.4	21.7	21.4	16.6
	K.W.	1.19	1.19	1.19	1.19	1.19	1.26	1.26	1.27	1.27	1.27	1.34	1.34	1.34	1.35	1.35
75	T.C.	21.2	23.2	23.1	25.1	27.2	23.1	24.2	24.0	26.1	28.2	25.1	25.1	25.0	27.2	29.3
	S.C.	21.2	20.1	17.3	17.3	14.4	23.1	22.8	19.2	19.1	15.3	25.1	25.1	21.2	20.9	16.2
	K.W.	1.36	1.36	1.36	1.36	1.37	1.43	1.44	1.44	1.44	1.45	1.51	1.51	1.51	1.52	1.53
85	T.C.	20.6	22.1	22.1	24.0	26.0	22.3	23.0	22.9	24.9	27.0	24.1	23.9	23.8	25.9	28.0
	S.C.	20.6	19.6	16.8	16.8	13.9	22.3	22.0	18.8	18.6	14.9	24.1	23.9	20.7	20.4	15.8
	K.W.	1.52	1.53	1.53	1.54	1.55	1.61	1.61	1.61	1.62	1.63	1.69	1.69	1.69	1.70	1.71
95	T.C.	20.0	21.1	21.0	23.0	24.8	21.5	21.9	21.8	23.8	25.7	23.1	22.6	22.5	24.5	26.7
	S.C.	20.0	19.2	16.4	16.3	13.4	21.5	21.3	18.3	18.1	14.4	23.1	22.6	20.2	19.8	15.4
	K.W.	1.69	1.70	1.70	1.71	1.72	1.78	1.78	1.78	1.79	1.81	1.86	1.86	1.86	1.87	1.89
105	T.C.	19.1	19.8	19.8	21.6	23.4	20.5	20.7	20.4	22.3	24.1	21.8	21.6	21.1	23.0	24.9
	S.C.	19.1	18.6	15.8	15.7	12.8	20.5	20.5	17.7	17.5	13.7	21.8	21.6	19.6	19.3	14.7
	K.W.	1.90	1.90	1.90	1.92	1.93	1.98	1.99	1.98	2.00	2.01	2.07	2.07	2.06	2.08	2.10
115	T.C.	18.1	18.6	18.6	20.3	21.9	19.4	19.6	19.1	20.8	22.5	20.6	20.6	19.6	21.4	23.1
	S.C.	18.1	18.1	15.3	15.0	12.2	19.4	19.6	17.1	16.9	13.1	20.6	20.6	19.0	18.7	13.9
	K.W.	2.11	2.11	2.11	2.12	2.14	2.19	2.19	2.19	2.20	2.22	2.28	2.28	2.27	2.29	2.30
125	T.C.	17.2	17.3	17.4	18.9	20.5	18.3	18.5	17.8	19.4	20.9	19.4	19.6	18.2	19.8	21.4
	S.C.	17.2	17.3	14.8	14.4	11.6	18.3	18.5	16.6	16.3	12.4	19.4	19.6	18.2	18.2	13.2
	K.W.	2.32	2.31	2.32	2.33	2.34	2.40	2.40	2.39	2.41	2.43	2.49	2.49	2.47	2.49	2.51
NOTE: ALL CAPACITIES INCLUDE INDOOR FAN HEAT. KW VALUES ARE FOR THE SYSTEM (OUTDOOR + INDOOR).																

Multipliers for determining the performance with other indoor sections.

NOTE: For dry bulb temperatures different than those listed (between 73-87 °F), sensible capacity increases by 1060 BTUH per 1000 CFM per degree above the listed temperature and decreases by 1060 BTUH per 1000 CFM per degree below the listed temperature.

Air Handler	Coil	T.C.	S.C.	KW
–	FC/MC/PC35	0.97	0.95	1.13
–	FC/MC/PC37	0.99	0.97	1.15
–	FC/MC/PC43	0.99	0.97	1.15
AHE24B	–	1.00	0.99	1.07
AHE30B	–	1.00	0.99	1.07
AHX36	–	1.01	1.00	1.08
AV*36	–	1.00	0.96	1.03
F6FP030	–	1.00	0.99	1.07
F6FP036	–	1.00	0.99	1.07
MV12B	FC/MC35B	0.99	0.98	1.06
MV12B	FC/MC43B	1.03	1.03	1.05
MX12B	FC/MC35B	1.01	1.01	1.08
MX12B	FC/MC43B	1.00	0.97	1.07

Furnace	Coil	T.C.	S.C.	KW
T*(8,L)X*A12	FC/MC/PC32A	1.00	0.99	1.03
T*(8,L)X*B12	FC/MC/PC35B	1.01	1.01	1.04
T*(8,L)X*C16	FC/MC/PC35C	1.01	1.01	1.04
T*(8,L)X*C20	FC/MC/PC35C	1.01	1.00	1.08
T*9X*B12	FC/MC/PC35B	1.00	0.98	1.03
T*9X*C16	FC/MC/PC35C	0.99	0.97	1.06
T*9X*C20	FC/MC/PC35C	1.01	1.00	1.04

Furnace	Coil	T.C.	S.C.	KW
T*(8,L)X*A12	FC/MC/PC37A	1.03	1.03	1.05
T*(8,L)X*B12	FC/MC/PC43B	1.03	1.03	1.05
T*(8,L)X*C16	FC/MC/PC43C	1.03	1.03	1.05
T*(8,L)X*C20	FC/MC/PC43C	1.03	1.03	1.05
T*9X*B12	FC/MC/PC43B	1.03	1.03	1.05
T*9X*C16	FC/MC/PC43C	1.02	0.99	1.04
T*9X*C20	FC/MC/PC43C	1.01	1.00	1.04
(Y*LC/T*8V/T*LV)*A12	FC/MC/PC32A	0.98	0.96	1.05
(Y*LC/T*8V/T*LV)*B12	FC/MC/PC35B	0.99	0.97	1.06
(Y*LC/T*8V/T*LV)*C16	FC/MC/PC35C	0.99	0.97	1.06
(Y*LC/T*8V/T*LV)*C20	FC/MC/PC35C	0.99	0.96	1.06
(Y*9C/T*9V)*B12	FC/MC/PC35B	1.00	0.99	1.07
(Y*9C/T*9V)*C16	FC/MC/PC35C	1.01	1.04	1.08
(Y*9C/T*9V)*C20	FC/MC/PC35C	0.99	0.96	1.06
(Y*LC/T*8V/T*LV)*A12	FC/MC/PC37A	1.00	0.98	1.07
(Y*LC/T*8V/T*LV)*B12	FC/MC/PC43B	1.01	0.99	1.08
(Y*LC/T*8V/T*LV)*C16	FC/MC/PC43C	1.01	0.98	1.04
(Y*LC/T*8V/T*LV)*C20	FC/MC/PC43C	1.00	0.97	1.07
(Y*9C/T*9V)*B12	FC/MC/PC43B	1.02	1.02	1.09
(Y*9C/T*9V)*C16	FC/MC/PC43C	1.02	1.03	1.04
(Y*9C/T*9V)*C20	FC/MC/PC43C	1.03	1.06	1.06

COOLING PERFORMANCE DATA																
OUTDOOR UNIT MODEL NO.		**YZF03013(C)**														
INDOOR COIL MODEL NO.		**AHX36**														
CONDENSER ENTERING AIR TEMPERATURE	**ID CFM**	805					1005					1205				
	ID DB (°F)	80	80	75	80	80	80	80	75	80	80	80	80	75	80	80
	ID WB (°F)	57	62	62	67	72	57	62	62	67	57	62	62	67	72	57
65	T.C.	27.5	29.6	29.7	32.4	35.6	29.4	30.7	30.7	33.7	36.7	31.4	31.8	31.8	35.0	37.9
	S.C.	27.5	25.6	22.0	21.8	17.9	29.4	28.8	24.1	23.9	19.1	31.4	31.8	26.2	26.0	20.4
	K.W.	1.49	1.49	1.49	1.49	1.48	1.56	1.56	1.57	1.56	1.55	1.63	1.63	1.64	1.63	1.62
75	T.C.	26.5	28.3	28.3	31.0	34.0	28.4	29.3	29.3	32.1	35.1	30.2	30.3	30.3	33.3	36.2
	S.C.	26.5	25.0	21.4	21.2	17.3	28.4	27.9	23.5	23.2	18.5	30.2	30.3	25.6	25.3	19.7
	K.W.	1.67	1.67	1.67	1.67	1.67	1.74	1.74	1.75	1.74	1.74	1.82	1.82	1.82	1.82	1.81
85	T.C.	25.5	27.0	27.0	29.6	32.5	27.3	27.9	27.9	30.6	33.5	29.1	28.8	28.7	31.5	34.5
	S.C.	25.5	24.4	20.8	20.6	16.7	27.3	26.9	22.8	22.6	17.9	29.1	28.8	24.9	24.6	19.1
	K.W.	1.85	1.85	1.85	1.85	1.86	1.93	1.93	1.92	1.93	1.93	2.01	2.00	2.00	2.00	2.00
95	T.C.	24.5	25.7	25.7	28.2	31.0	26.2	26.5	26.4	29.0	31.9	27.9	27.3	27.2	29.7	32.8
	S.C.	24.5	23.8	20.1	19.9	16.1	26.2	25.9	22.2	21.9	17.2	27.9	27.3	24.3	23.9	18.4
	K.W.	2.03	2.03	2.03	2.03	2.04	2.11	2.11	2.10	2.11	2.11	2.19	2.18	2.18	2.18	2.18
105	T.C.	23.2	24.0	24.0	26.4	29.0	24.7	25.0	24.7	27.1	29.7	26.2	25.9	25.3	27.7	30.5
	S.C.	23.2	23.0	19.4	19.2	15.3	24.7	24.8	21.5	21.2	16.4	26.2	25.9	23.5	23.1	17.6
	K.W.	2.27	2.27	2.27	2.27	2.28	2.35	2.34	2.34	2.34	2.35	2.42	2.42	2.42	2.42	2.42
115	T.C.	22.0	22.3	22.4	24.6	27.0	23.3	23.4	22.9	25.1	27.6	24.5	24.5	23.4	25.7	28.2
	S.C.	22.0	22.3	18.7	18.4	14.5	23.3	23.4	20.7	20.4	15.6	24.5	24.5	22.7	22.4	16.7
	K.W.	2.51	2.51	2.51	2.51	2.51	2.58	2.58	2.58	2.58	2.58	2.66	2.66	2.66	2.65	2.66
125	T.C.	20.7	20.6	20.7	22.7	25.0	21.8	21.9	21.1	23.2	25.4	22.9	23.1	21.6	23.7	25.9
	S.C.	20.7	20.6	17.9	17.7	13.8	21.8	21.9	19.9	19.6	14.8	22.9	23.1	21.6	21.6	15.8
	K.W.	2.75	2.74	2.74	2.74	2.74	2.82	2.82	2.82	2.82	2.82	2.89	2.89	2.89	2.89	2.89
NOTE: ALL CAPACITIES INCLUDE INDOOR FAN HEAT. KW VALUES ARE FOR THE SYSTEM (OUTDOOR + INDOOR).																

Multipliers for determining the performance with other indoor sections.

NOTE: For dry bulb temperatures different than those listed (between 73-87 °F), sensible capacity increases by 1060 BTUH per 1000 CFM per degree above the listed temperature and decreases by 1060 BTUH per 1000 CFM per degree below the listed temperature.

Air Handler	Coil	T.C.	S.C.	KW
–	FC/MC/PC37	0.99	0.97	1.13
–	FC/MC/PC43	0.99	0.97	1.13
AHE36C	–	1.01	1.00	1.07
AV*36	–	1.00	0.98	1.06
MV12B	FC/MC43B	1.00	0.99	1.06
MV16C	FC/MC43C	1.00	1.00	1.06
MX12B	FC/MC43B	1.01	1.05	1.07

Furnace	Coil	T.C.	S.C.	KW
T*(8,L)X*A12	FC/MC/PC37A	1.01	1.05	1.07
T*(8,L)X*B12	FC/MC/PC43B	1.01	1.05	1.07
T*(8,L)X*C16	FC/MC/PC43C	1.00	0.98	1.06
T*(8,L)X*C20	FC/MC/PC43C	0.98	0.94	1.04
T*9X*B12	FC/MC/PC43B	1.02	1.05	1.08
T*9X*C16	FC/MC/PC43C	1.02	1.05	1.08
(Y*LC/T*8V/T*LV)*A12	FC/MC/PC37A	0.99	0.96	1.08
(Y*LC/T*8V/T*LV)*B12	FC/MC/PC43B	1.00	1.01	1.10
(Y*LC/T*8V/T*LV)*C16	FC/MC/PC43C	1.01	1.02	1.07
(Y*LC/T*8V/T*LV)*C20	FC/MC/PC43C	1.01	1.02	1.07
(Y*9C/T*9V)*B12	FC/MC/PC43B	1.00	1.00	1.10
(Y*9C/T*9V)*C16	FC/MC/PC43C	1.00	1.01	1.10
(Y*9C/T*9V)*C20	FC/MC/PC43C	1.00	0.99	1.06

COOLING PERFORMANCE DATA																
OUTDOOR UNIT MODEL NO.		YZF03613(C)														
INDOOR COIL MODEL NO.		AHX42														
CONDENSER ENTERING AIR TEMPERATURE	ID CFM	1000					1200					1400				
	ID DB (°F)	80	80	75	80	80	80	80	75	80	80	80	80	75	80	80
	ID WB (°F)	57	62	62	67	72	57	62	62	67	57	62	62	67	72	57
65	T.C.	34.1	36.2	36.4	39.6	43.0	36.1	37.4	37.5	40.8	44.1	38.1	38.5	38.5	42.0	45.3
	S.C.	34.1	31.2	26.9	26.6	21.7	36.1	34.5	28.9	28.5	22.8	38.1	37.8	30.9	30.3	23.9
	K.W.	1.93	1.93	1.94	1.94	1.95	2.01	2.02	2.02	2.03	2.04	2.10	2.10	2.10	2.13	2.12
75	T.C.	32.9	34.7	34.8	38.0	41.2	34.8	35.7	35.7	38.9	42.2	36.6	36.6	36.7	39.9	43.3
	S.C.	32.9	30.5	26.1	25.8	21.0	34.8	33.4	28.1	27.7	22.1	36.6	36.3	30.1	29.6	23.1
	K.W.	2.20	2.20	2.20	2.21	2.23	2.29	2.29	2.29	2.30	2.32	2.37	2.37	2.37	2.39	2.41
85	T.C.	31.8	33.1	33.2	36.3	39.4	33.5	34.0	34.0	37.1	40.3	35.2	34.8	34.8	37.8	41.2
	S.C.	31.8	29.8	25.4	25.1	20.3	33.5	32.3	27.4	27.0	21.3	35.2	34.7	29.4	28.9	22.4
	K.W.	2.47	2.47	2.47	2.49	2.51	2.56	2.56	2.56	2.57	2.60	2.65	2.64	2.65	2.65	2.69
95	T.C.	30.6	31.5	31.6	34.6	37.6	32.1	32.3	32.3	35.2	38.4	33.7	33.0	33.0	35.8	39.2
	S.C.	30.6	29.1	24.6	24.3	19.6	32.1	31.1	26.6	26.2	20.6	33.7	33.0	28.7	28.2	21.6
	K.W.	2.74	2.74	2.74	2.77	2.79	2.83	2.83	2.83	2.84	2.89	2.92	2.91	2.92	2.90	2.98
105	T.C.	29.0	29.3	29.6	32.4	35.3	30.4	30.4	30.1	32.9	35.9	31.7	31.4	30.6	33.4	36.5
	S.C.	29.0	28.2	23.7	23.4	18.6	30.4	29.9	25.7	25.3	19.7	31.7	31.4	27.7	27.2	20.7
	K.W.	3.06	3.05	3.07	3.05	3.07	3.13	3.12	3.15	3.12	3.16	3.20	3.20	3.23	3.20	3.25
115	T.C.	27.4	27.2	27.6	30.2	33.0	28.6	28.5	27.9	30.6	33.4	29.8	29.8	28.2	31.0	33.9
	S.C.	27.4	27.2	22.8	22.5	17.6	28.6	28.5	24.8	24.4	18.7	29.8	29.8	26.7	26.3	19.7
	K.W.	3.38	3.35	3.40	3.32	3.34	3.43	3.42	3.47	3.41	3.43	3.49	3.49	3.54	3.50	3.52
125	T.C.	25.9	25.0	25.6	28.0	30.7	26.9	26.6	25.7	28.4	30.9	27.9	28.2	25.8	28.7	31.2
	S.C.	25.9	25.0	21.9	21.6	16.7	26.9	26.6	23.8	23.5	17.7	27.9	28.2	25.8	25.4	18.8
	K.W.	3.70	3.65	3.73	3.60	3.62	3.73	3.71	3.79	3.70	3.70	3.77	3.77	3.85	3.79	3.79
NOTE: ALL CAPACITIES INCLUDE INDOOR FAN HEAT. KW VALUES ARE FOR THE SYSTEM (OUTDOOR + INDOOR).																

Multipliers for determining the performance with other indoor sections.

NOTE: For dry bulb temperatures different than those listed (between 73-87 °F), sensible capacity increases by 1060 BTUH per 1000 CFM per degree above the listed temperature and decreases by 1060 BTUH per 1000 CFM per degree below the listed temperature.

Air Handler	Coil	T.C.	S.C.	KW
–	FC/MC/PC48	0.98	0.97	1.14
–	FC/MC/PC60	0.97	0.96	1.13
AHE42D	–	0.99	0.98	1.06
AHE48D	–	0.99	0.98	1.06
AHX48	–	1.01	1.03	1.08
AV*48	–	1.00	1.01	1.08
F6FP042	–	1.00	1.03	1.08
F6FP048	–	0.99	0.97	1.06
MV12D	FC/MC48D	0.99	0.98	1.06
MV16C	FC/MC48C	0.98	0.98	1.06
MV12D	FC/MC60D	0.98	0.97	1.06
MX12D	FC/MC48D	1.00	1.01	1.08
MX16C	FC/MC48C	0.99	0.98	1.07
MX12D	FC/MC60D	1.00	1.02	1.08

Furnace	Coil	T.C.	S.C.	KW
T*(8,L)X*C16	FC/MC/PC48C	0.99	0.98	1.06
T*(8,L)X*C20	FC/MC/PC48C	1.01	1.02	1.08
T*9X*C16	FC/MC/PC48C	1.00	1.02	1.08
T*9X*C20	FC/MC/PC48C	0.98	0.98	1.06
T*9X*D20	FC/MC/PC48D	1.00	1.02	1.08
T*(8,L)X*C16	FC/PC60C	0.99	0.98	1.06
T*(8,L)X*C20	FC/PC60C	1.01	1.03	1.08

Furnace	Coil	T.C.	S.C.	KW
T*9X*C16	FC/PC60C	1.01	1.04	1.08
T*9X*C20	FC/PC60C	1.00	1.02	1.08
T*9X*D20	FC/MC/PC60D	1.01	1.05	1.09
T*(8,L)X*C16	UC48C	0.99	0.99	1.06
T*(8,L)X*C20	UC48C	0.99	1.02	1.07
T*9X*C16	UC48C	0.99	1.02	1.06
T*9X*C20	UC48C	0.98	0.98	1.06
T*9X*D20	UC48D	0.98	0.98	1.06
T*(8,L)X*C16	UC60C	0.98	0.98	1.06
T*(8,L)X*C20	UC60C	0.99	1.01	1.06
T*9X*C16	UC60C	0.99	1.02	1.06
T*9X*C20	UC60C	0.98	0.97	1.05
T*9X*D20	UC60D	0.99	1.02	1.07
(Y*LC/T*8V/T*LV)*C16	FC/MC/PC48C	0.98	0.98	1.06
(Y*LC/T*8V/T*LV)*C20	FC/MC/PC48C	0.98	0.98	1.06
(Y*9C/T*9V)*D20	FC/MC/PC48D	0.99	1.01	1.07
(Y*LC/T*8V/T*LV)*C16	FC/PC60C	0.99	0.97	1.06
(Y*LC/T*8V/T*LV)*C20	FC/PC60C	0.99	1.00	1.07
(Y*9C/T*9V)*D20	FC/MC/PC60D	0.99	1.00	1.07
(Y*LC/T*8V/T*LV)*C16	UC48C	0.98	0.98	1.06
(Y*LC/T*8V/T*LV)*C20	UC48C	0.98	0.98	1.06
(Y*LC/T*8V/T*LV)*C16	UC60C	0.98	0.97	1.05
(Y*LC/T*8V/T*LV)*C20	UC60C	0.98	0.97	1.05

COOLING PERFORMANCE DATA																
OUTDOOR UNIT MODEL NO.		**YZF04213(C)**														
INDOOR COIL MODEL NO.		**AHX60**														
CONDENSER ENTERING AIR TEMPERATURE	**ID CFM**	1185					1385					1585				
	ID DB (°F)	80	80	75	80	80	80	80	75	80	80	80	80	75	80	80
	ID WB (°F)	57	62	62	67	72	57	62	62	67	57	62	62	67	72	57
65	T.C.	39.7	42.3	42.3	46.2	50.6	41.4	43.5	43.4	47.5	51.9	43.2	44.7	44.6	48.7	53.3
	S.C.	37.5	33.8	29.1	29.0	24.1	39.1	36.7	31.1	30.8	25.2	40.8	39.6	33.0	32.6	26.2
	K.W.	2.37	2.38	2.37	2.37	2.37	2.45	2.46	2.45	2.45	2.46	2.52	2.53	2.53	2.53	2.54
75	T.C.	38.3	40.4	40.5	44.2	48.4	40.0	41.5	41.5	45.4	49.6	41.8	42.6	42.5	46.5	50.9
	S.C.	36.2	33.1	28.4	28.2	23.2	37.8	35.8	30.3	30.0	24.2	39.4	38.4	32.2	31.9	25.3
	K.W.	2.70	2.70	2.70	2.71	2.72	2.78	2.78	2.78	2.79	2.81	2.86	2.86	2.86	2.88	2.89
85	T.C.	37.0	38.5	38.7	42.2	46.2	38.6	39.4	39.6	43.3	47.3	40.3	40.4	40.4	44.3	48.4
	S.C.	34.9	32.5	27.7	27.4	22.3	36.5	34.9	29.5	29.2	23.3	38.1	37.3	31.4	31.1	24.3
	K.W.	3.02	3.02	3.03	3.05	3.07	3.11	3.11	3.11	3.13	3.16	3.20	3.19	3.19	3.22	3.24
95	T.C.	35.6	36.6	36.9	40.2	44.0	37.2	37.4	37.6	41.2	45.0	38.9	38.2	38.3	42.2	45.9
	S.C.	33.6	31.8	26.9	26.6	21.4	35.2	34.0	28.8	28.4	22.4	36.7	36.1	30.6	30.3	23.4
	K.W.	3.34	3.34	3.36	3.38	3.42	3.44	3.43	3.44	3.48	3.51	3.55	3.52	3.52	3.57	3.60
105	T.C.	33.8	34.4	34.6	37.8	41.5	35.3	35.4	35.1	38.6	42.2	36.8	36.5	35.7	39.3	43.0
	S.C.	31.9	31.0	26.0	25.7	20.5	33.3	32.7	27.8	27.5	21.4	34.8	34.4	29.7	29.3	22.4
	K.W.	3.71	3.64	3.64	3.67	3.71	3.77	3.73	3.73	3.76	3.80	3.83	3.82	3.81	3.85	3.88
115	T.C.	32.0	32.2	32.2	35.4	38.9	33.3	33.4	32.7	35.9	39.5	34.7	34.7	33.1	36.5	40.0
	S.C.	30.2	30.1	25.1	24.8	19.6	31.5	31.4	26.9	26.6	20.5	32.8	32.8	28.7	28.3	21.4
	K.W.	4.07	3.93	3.93	3.96	4.00	4.09	4.02	4.01	4.04	4.08	4.12	4.12	4.09	4.13	4.17
125	T.C.	30.1	30.0	29.8	33.0	36.4	31.4	31.4	30.2	33.3	36.7	32.6	32.9	30.5	33.6	37.1
	S.C.	28.5	29.3	24.1	23.9	18.6	29.6	30.2	26.0	25.6	19.5	30.8	31.1	27.8	27.4	20.4
	K.W.	4.43	4.22	4.21	4.24	4.29	4.42	4.32	4.30	4.32	4.37	4.40	4.41	4.38	4.41	4.45
NOTE: ALL CAPACITIES INCLUDE INDOOR FAN HEAT. KW VALUES ARE FOR THE SYSTEM (OUTDOOR + INDOOR).																

Multipliers for determining the performance with other indoor sections.

NOTE: For dry bulb temperatures different than those listed (between 73-87 °F), sensible capacity increases by 1060 BTUH per 1000 CFM per degree above the listed temperature and decreases by 1060 BTUH per 1000 CFM per degree below the listed temperature.

Air Handler	Coil	T.C.	S.C.	KW
–	FC/MC62	0.99	0.98	1.13
AHE60D	–	1.01	1.01	1.06
F6FP060	–	1.01	1.02	1.06
MV20D	FC/MC62D	1.00	1.00	1.05
MX20D	FC/MC62D	1.02	1.04	1.08

Furnace	Coil	T.C.	S.C.	KW
T*(8,L)X*C16	FC/MC62D	1.00	0.99	1.05
T*(8,L)X*C20	FC/MC62D	1.01	1.03	1.06
T*9X*C16	FC/MC62D	1.01	1.02	1.06
T*9X*C20	FC/MC62D	1.01	1.03	1.06
T*9X*D20	FC/MC62D	1.01	1.03	1.06
(Y*LC/T*8V/T*LV)*C16	FC/MC62D	1.01	1.02	1.06
(Y*LC/T*8V/T*LV)*C20	FC/MC62D	1.00	0.99	1.05
(Y*9C/T*9V)*D20	FC/MC62D	1.01	1.02	1.06

COOLING PERFORMANCE DATA																
OUTDOOR UNIT MODEL NO.		**YZF04813(C)**														
INDOOR COIL MODEL NO.		**AHX60**														
CONDENSER ENTERING AIR TEMPERATURE	**ID CFM**	1400					1600					1800				
	ID DB (°F)	80	80	75	80	80	80	80	75	80	80	80	80	75	80	80
	ID WB (°F)	57	62	62	67	72	57	62	62	67	57	62	62	67	72	57
65	T.C.	45.7	48.6	48.5	52.9	58.0	47.6	49.7	49.6	54.2	59.4	49.4	50.9	50.8	55.5	60.7
	S.C.	45.7	42.2	36.3	35.9	29.9	47.6	45.2	38.3	37.9	30.9	49.4	48.1	40.3	39.9	32.0
	K.W.	2.57	2.58	2.58	2.59	2.62	2.65	2.66	2.66	2.67	2.71	2.73	2.73	2.73	2.75	2.79
75	T.C.	44.1	46.4	46.3	50.6	55.4	45.8	47.4	47.4	51.7	56.6	47.6	48.4	48.4	52.9	57.8
	S.C.	44.1	41.4	35.3	35.0	28.7	45.8	44.1	37.3	36.9	29.8	47.6	46.9	39.3	38.8	30.8
	K.W.	2.90	2.91	2.91	2.92	2.95	2.98	2.98	2.98	3.00	3.04	3.06	3.06	3.06	3.08	3.12
85	T.C.	42.5	44.3	44.2	48.3	52.8	44.1	45.1	45.1	49.3	53.8	45.7	45.9	45.9	50.3	54.8
	S.C.	42.5	40.5	34.3	34.0	27.5	44.1	43.0	36.3	35.9	28.6	45.7	45.6	38.3	37.8	29.6
	K.W.	3.23	3.24	3.24	3.26	3.29	3.31	3.31	3.31	3.34	3.37	3.39	3.39	3.39	3.42	3.45
95	T.C.	40.9	42.1	42.1	45.9	50.2	42.4	42.7	42.8	46.8	51.0	43.9	43.4	43.5	47.7	51.9
	S.C.	40.9	39.6	33.4	33.0	26.3	42.4	42.0	35.3	34.9	27.4	43.9	43.4	37.3	36.7	28.4
	K.W.	3.56	3.56	3.56	3.59	3.62	3.64	3.64	3.64	3.67	3.70	3.73	3.72	3.72	3.75	3.79
105	T.C.	38.2	38.6	38.6	42.6	46.5	39.6	39.6	39.2	43.1	47.2	41.0	40.6	39.7	43.6	48.0
	S.C.	38.2	37.7	31.8	31.6	24.8	39.6	39.6	33.8	33.4	25.9	41.0	40.6	35.8	35.2	27.0
	K.W.	3.96	3.96	3.96	4.00	4.03	4.05	4.04	4.04	4.07	4.11	4.13	4.13	4.12	4.15	4.19
115	T.C.	35.6	35.1	35.0	39.3	42.8	36.8	36.4	35.5	39.4	43.4	38.0	37.7	36.0	39.6	44.1
	S.C.	35.6	35.1	30.3	30.2	23.3	36.8	36.4	32.3	32.0	24.4	38.0	37.7	34.3	33.8	25.6
	K.W.	4.36	4.36	4.36	4.40	4.44	4.45	4.45	4.44	4.48	4.52	4.54	4.54	4.52	4.55	4.60
125	T.C.	32.9	31.6	31.5	36.0	39.1	34.0	33.3	31.9	35.8	39.6	35.1	34.9	32.3	35.5	40.2
	S.C.	32.9	31.6	28.8	28.8	21.8	34.0	33.3	30.8	30.6	22.9	35.1	34.9	32.3	32.3	24.1
	K.W.	4.77	4.76	4.75	4.81	4.84	4.86	4.85	4.83	4.88	4.93	4.95	4.94	4.92	4.95	5.01
NOTE: ALL CAPACITIES INCLUDE INDOOR FAN HEAT. KW VALUES ARE FOR THE SYSTEM (OUTDOOR + INDOOR).																

Multipliers for determining the performance with other indoor sections.

NOTE: For dry bulb temperatures different than those listed (between 73-87 °F), sensible capacity increases by 1060 BTUH per 1000 CFM per degree above the listed temperature and decreases by 1060 BTUH per 1000 CFM per degree below the listed temperature.

Air Handler	Coil	T.C.	S.C.	KW
–	FC/MC62	0.98	0.98	1.09
–	FC64	1.00	1.01	1.11
AHE60D	–	0.99	0.99	1.01
F6FP060	–	0.99	0.99	1.01
MV20D	FC/MC62D	0.99	0.99	1.01
MV20D	FC64D	1.02	1.05	1.01
MX20D	FC/MC62D	1.00	1.01	1.02
MX20D	FC64D	1.02	1.05	1.05

Furnace	Coil	T.C.	S.C.	KW
T*(8,L)X*C20	FC/MC62D	1.00	1.02	1.02
T*9X*C20	FC/MC62D	0.99	0.99	1.01
T*(8,L)X*C16	FC64D	1.02	1.04	1.05
T*(8,L)X*C20	FC64D	1.02	1.05	1.05
T*9X*C16	FC64D	1.01	1.04	1.03
T*9X*C20	FC64D	1.02	1.05	1.05
T*9X*D20	FC64D	1.01	1.04	1.03
(Y*LC/T*8V/T*LV)*C16	FC64D	1.01	1.04	1.03
(Y*LC/T*8V/T*LV)*C20	FC64D	1.01	1.04	1.03
(Y*9C/T*9V)*C16	FC64D	1.01	1.03	1.03

COOLING PERFORMANCE DATA - LOW CFM 1-STAGE OPERATION																
OUTDOOR UNIT MODEL NO.		YZF06013(C)														
INDOOR COIL MODEL NO.		AHX60														
CONDENSER ENTERING AIR TEMPERATURE	ID CFM	1055					1255					1455				
	ID DB (°F)	80	80	75	80	80	80	80	75	80	80	80	80	75	80	80
	ID WB (°F)	57	62	62	67	72	57	62	62	67	57	62	62	67	72	57
65	T.C.	45.5	49.4	49.3	54.2	59.0	48.2	51.4	51.2	56.0	61.0	50.9	53.3	53.0	57.9	63.0
	S.C.	42.4	37.6	32.7	32.6	27.5	44.9	40.8	35.0	34.9	28.8	47.4	44.1	37.4	37.1	30.0
	K.W.	1.57	1.57	1.57	1.57	1.56	1.62	1.62	1.62	1.62	1.61	1.67	1.67	1.67	1.67	1.66
75	T.C.	43.8	47.1	47.0	51.7	56.4	46.3	48.8	48.6	53.4	58.3	48.8	50.4	50.2	55.0	60.1
	S.C.	40.8	36.7	31.7	31.6	26.4	43.1	39.9	34.0	33.8	27.7	45.5	43.1	36.4	36.0	28.9
	K.W.	1.80	1.80	1.80	1.80	1.80	1.85	1.85	1.85	1.85	1.85	1.90	1.90	1.90	1.90	1.90
85	T.C.	42.1	44.8	44.7	49.3	53.8	44.4	46.2	46.1	50.7	55.5	46.8	47.5	47.5	52.1	57.2
	S.C.	39.2	35.8	30.7	30.5	25.3	41.4	39.0	33.0	32.7	26.6	43.6	42.2	35.3	35.0	27.8
	K.W.	2.03	2.03	2.03	2.03	2.04	2.08	2.08	2.08	2.09	2.09	2.13	2.13	2.13	2.14	2.14
95	T.C.	40.4	42.4	42.5	46.8	51.2	42.5	43.6	43.6	48.0	52.7	44.7	44.7	44.7	49.2	54.3
	S.C.	37.6	34.9	29.7	29.5	24.2	39.6	38.0	32.0	31.7	25.5	41.7	41.2	34.3	33.9	26.8
	K.W.	2.26	2.26	2.26	2.27	2.27	2.31	2.31	2.31	2.32	2.33	2.37	2.37	2.37	2.37	2.38
105	T.C.	38.2	39.4	39.4	43.5	47.7	40.1	40.7	40.4	44.5	48.9	42.0	41.9	41.3	45.6	50.2
	S.C.	35.6	33.7	28.5	28.2	22.7	37.4	36.3	30.7	30.4	24.0	39.2	38.9	33.0	32.6	25.3
	K.W.	2.56	2.56	2.56	2.56	2.57	2.61	2.61	2.61	2.62	2.62	2.66	2.66	2.66	2.67	2.68
115	T.C.	36.1	36.4	36.4	40.2	44.1	37.7	37.8	37.1	41.1	45.1	39.3	39.2	37.8	41.9	46.1
	S.C.	33.6	32.5	27.2	27.0	21.3	35.1	34.5	29.5	29.1	22.6	36.7	36.5	31.7	31.3	23.8
	K.W.	2.86	2.87	2.87	2.86	2.86	2.91	2.91	2.91	2.91	2.92	2.96	2.96	2.96	2.97	2.97
125	T.C.	33.9	33.3	33.4	36.9	40.6	35.3	34.9	33.9	37.6	41.3	36.7	36.5	34.4	38.3	41.9
	S.C.	31.6	31.3	26.0	25.7	19.9	32.9	32.8	28.2	27.9	21.1	34.2	34.2	30.4	30.1	22.4
	K.W.	3.16	3.17	3.17	3.15	3.16	3.21	3.22	3.21	3.21	3.21	3.26	3.26	3.26	3.26	3.27
NOTE: ALL CAPACITIES INCLUDE INDOOR FAN HEAT. KW VALUES ARE FOR THE SYSTEM (OUTDOOR + INDOOR).																

Multipliers for determining the performance with other indoor sections.

NOTE: For dry bulb temperatures different than those listed (between 73-87 °F), sensible capacity increases by 1060 BTUH per 1000 CFM per degree above the listed temperature and decreases by 1060 BTUH per 1000 CFM per degree below the listed temperature.

LOW CFM

Air Handler	Coil	T.C.	S.C.	KW
–	FC/MC62	1.00	1.01	1.13
–	FC64	1.03	1.05	1.12
AHE60D	–	0.98	0.96	0.98
MV20D	FC/MC62D	0.98	0.96	1.02
MV20D	FC64D	0.99	0.99	1.00
MX20D	FC/MC62D	1.02	1.04	1.03
MX20D	FC64D	1.05	1.09	1.02

Furnace	Coil	T.C.	S.C.	KW
T*(8,L)X*C16	FC/MC62D	0.98	0.95	1.03
T*9X*C16	FC/MC62D	0.99	0.95	1.04
T*9X*C20	FC/MC62D	1.00	0.99	1.01
T*9X*D20	FC/MC62D	1.00	0.99	1.01
T*(8,L)X*C16	FC64D	1.00	0.98	1.02
T*(8,L)X*C20	FC64D	0.96	0.89	1.09
T*9X*C16	FC64D	1.00	0.98	1.02
T*9X*C20	FC64D	1.00	1.01	0.99
T*9X*D20	FC64D	1.00	1.02	0.98
(Y*LC/T*8V/T*LV)*C16	FC/MC62D	0.98	0.95	1.03
(Y*LC/T*8V/T*LV)*C20	FC/MC62D	0.99	0.95	1.04
(Y*9C/T*9V)*C16	FC/MC62D	0.99	0.94	1.05
(Y*9C/T*9V)*C20	FC/MC62D	0.99	0.94	1.05
(Y*9C/T*9V)*D20	FC/MC62D	0.99	0.94	1.05
(Y*LC/T*8V/T*LV)*C16	FC64D	1.00	0.98	1.02
(Y*LC/T*8V/T*LV)*C20	FC64D	1.00	0.98	1.02
(Y*9C/T*9V)*C16	FC64D	1.00	0.97	1.03
(Y*9C/T*9V)*C20	FC64D	1.00	0.97	1.03
(Y*9C/T*9V)*D20	FC64D	1.00	0.97	1.03

COOLING PERFORMANCE DATA - HIGH CFM 2-STAGE OPERATION																
OUTDOOR UNIT MODEL NO.		**YZF06013(C)**														
INDOOR COIL MODEL NO.		**AHX60**														
CONDENSER ENTERING AIR TEMPERATURE	**ID CFM**	1730					1930					2130				
	ID DB (°F)	80	80	75	80	80	80	80	75	80	80	80	80	75	80	80
	ID WB (°F)	57	62	62	67	72	57	62	62	67	57	62	62	67	72	57
65	T.C.	56.5	59.8	59.9	65.4	70.1	58.4	60.9	60.8	66.6	71.7	60.4	62.0	61.7	67.8	73.3
	S.C.	56.5	50.7	43.5	43.0	35.1	58.4	53.4	45.4	44.8	36.3	60.4	56.1	47.3	46.7	37.5
	K.W.	3.95	4.00	4.00	4.08	4.18	4.06	4.10	4.10	4.18	4.30	4.18	4.20	4.20	4.28	4.42
75	T.C.	54.3	56.8	56.9	62.1	67.1	56.0	57.8	57.7	63.2	68.3	57.8	58.8	58.5	64.2	69.6
	S.C.	54.3	49.5	42.2	41.6	33.7	56.0	52.1	44.1	43.5	34.8	57.8	54.8	45.9	45.4	35.9
	K.W.	4.40	4.44	4.44	4.52	4.63	4.51	4.54	4.54	4.63	4.74	4.63	4.64	4.64	4.73	4.85
85	T.C.	52.0	53.8	53.9	58.9	64.0	53.6	54.7	54.7	59.7	64.9	55.2	55.5	55.4	60.6	65.8
	S.C.	52.0	48.2	40.9	40.3	32.3	53.6	50.8	42.7	42.2	33.3	55.2	53.5	44.6	44.0	34.4
	K.W.	4.85	4.88	4.88	4.97	5.07	4.96	4.98	4.98	5.07	5.18	5.08	5.08	5.08	5.17	5.29
95	T.C.	49.8	50.8	50.9	55.6	60.9	51.2	51.5	51.6	56.3	61.5	52.7	52.3	52.3	57.1	62.1
	S.C.	49.8	46.9	39.5	39.0	30.9	51.2	49.6	41.4	40.8	31.9	52.7	52.2	43.3	42.6	32.8
	K.W.	5.30	5.32	5.32	5.41	5.52	5.41	5.42	5.42	5.52	5.62	5.53	5.52	5.52	5.62	5.72
105	T.C.	46.7	47.1	47.1	51.5	56.3	48.0	48.0	47.7	52.2	56.9	49.3	49.0	48.3	52.9	57.4
	S.C.	46.7	45.3	37.9	37.3	29.1	48.0	47.2	39.8	39.1	30.1	49.3	49.0	41.6	40.9	31.1
	K.W.	5.89	5.89	5.89	6.00	6.10	6.00	6.01	6.00	6.10	6.20	6.12	6.12	6.10	6.20	6.30
115	T.C.	43.6	43.3	43.2	47.5	51.7	44.7	44.6	43.8	48.0	52.2	45.9	45.8	44.3	48.6	52.7
	S.C.	43.6	43.3	36.2	35.7	27.4	44.7	44.6	38.1	37.5	28.3	45.9	45.8	40.0	39.2	29.3
	K.W.	6.48	6.47	6.47	6.58	6.68	6.60	6.59	6.57	6.68	6.78	6.71	6.71	6.67	6.77	6.88
125	T.C.	40.6	39.6	39.4	43.4	47.0	41.5	41.1	39.9	43.9	47.5	42.5	42.5	40.4	44.4	48.0
	S.C.	40.6	39.6	34.6	34.0	25.6	41.5	41.1	36.5	35.8	26.6	42.5	42.5	38.4	37.6	27.5
	K.W.	7.07	7.05	7.05	7.17	7.25	7.19	7.18	7.14	7.26	7.35	7.31	7.31	7.24	7.35	7.45
NOTE: ALL CAPACITIES INCLUDE INDOOR FAN HEAT. KW VALUES ARE FOR THE SYSTEM (OUTDOOR + INDOOR).																

Multipliers for determining the performance with other indoor sections.

NOTE: For dry bulb temperatures different than those listed (between 73-87 °F), sensible capacity increases by 1060 BTUH per 1000 CFM per degree above the listed temperature and decreases by 1060 BTUH per 1000 CFM per degree below the listed temperature.

HIGH CFM

Air Handler	Coil	T.C.	S.C.	KW
–	FC/MC62	0.97	0.95	1.02
–	FC64	1.01	1.00	1.03
AHE60D	–	0.99	0.98	0.99
MV20D	FC/MC62D	0.98	0.98	1.00
MV20D	FC64D	0.99	1.01	0.99
MX20D	FC/MC62D	0.99	0.98	0.97
MX20D	FC64D	1.03	1.01	0.98

Furnace	Coil	T.C.	S.C.	KW
T*(8,L)X*C16	FC/MC62D	0.99	0.97	1.02
T*9X*C16	FC/MC62D	0.99	0.97	1.02
T*9X*C20	FC/MC62D	0.98	0.97	1.02
T*9X*D20	FC/MC62D	0.99	0.96	1.03
T*(8,L)X*C16	FC64D	0.99	1.00	0.99
T*(8,L)X*C20	FC64D	0.99	1.01	0.98
T*9X*C16	FC64D	0.99	0.99	1.00
T*9X*C20	FC64D	0.99	0.99	1.00
T*9X*D20	FC64D	0.99	0.99	1.00
(Y*LC/T*8V/T*LV)*C16	FC/MC62D	0.99	0.96	1.03
(Y*LC/T*8V/T*LV)*C20	FC/MC62D	0.99	0.97	1.02
(Y*9C/T*9V)*C16	FC/MC62D	0.99	0.96	1.04
(Y*9C/T*9V)*C20	FC/MC62D	1.00	0.95	1.05
(Y*9C/T*9V)*D20	FC/MC62D	0.99	0.96	1.04
(Y*LC/T*8V/T*LV)*C16	FC64D	1.00	0.99	1.01
(Y*LC/T*8V/T*LV)*C20	FC64D	0.99	0.99	1.00
(Y*9C/T*9V)*C16	FC64D	1.00	0.98	1.02
(Y*9C/T*9V)*C20	FC64D	1.00	0.98	1.02
(Y*9C/T*9V)*D20	FC64D	1.00	0.98	1.02

HEATING PERFORMANCE DATA										
OUTDOOR UNIT MODEL NO.		**YZF02413(C)**								
INDOOR COIL MODEL NO.		**AHX30**								
AIR TEMP. ENTERING OUTDOOR UNIT	**AIR TEMP. ENTERING INDOOR COIL**	ID CFM								
		600			800			1000		
		MBTUH	KW	C.O.P.	MBTUH	KW	C.O.P.	MBTUH	KW	C.O.P.
60	60	29.1	4.30	1.8	30.4	4.69	1.6	31.6	5.12	1.4
	70	28.3	3.78	2.0	29.4	4.12	1.8	30.5	4.49	1.6
	80	27.6	3.35	2.2	28.5	3.64	2.0	29.4	3.96	1.8
47	60	24.4	3.85	1.6	25.1	4.03	1.5	25.8	4.21	1.4
	70	24.1	3.35	1.9	24.6	3.53	1.7	25.2	3.72	1.6
	80	23.7	2.95	2.1	24.2	3.13	2.0	24.6	3.32	1.8
40	60	22.1	3.30	1.7	22.7	3.52	1.6	23.3	3.75	1.5
	70	21.8	2.95	1.9	22.3	3.17	1.8	22.8	3.40	1.6
	80	21.5	2.67	2.1	21.9	2.87	1.9	22.3	3.10	1.7
30	60	19.5	3.20	1.6	20.0	3.28	1.5	20.5	3.35	1.4
	70	19.1	2.81	1.8	19.5	2.89	1.7	19.8	2.97	1.6
	80	18.7	2.49	2.0	19.0	2.57	1.9	19.2	2.64	1.8
17	60	15.7	2.62	1.5	16.0	2.68	1.5	16.4	2.75	1.4
	70	15.3	2.15	1.9	15.6	2.29	1.7	15.9	2.43	1.5
	80	14.8	1.81	2.2	15.2	1.98	1.9	15.5	2.17	1.7
10	60	13.6	2.28	1.5	13.9	2.33	1.4	14.1	2.38	1.4
	70	12.9	1.95	1.7	13.3	2.03	1.6	13.7	2.10	1.5
	80	12.2	1.68	1.9	12.7	1.77	1.8	13.3	1.86	1.7
NOTE: ALL CAPACITIES ARE NET, WITH INDOOR FAN HEAT ALREADY DEDUCTED. KW VALUES ARE FOR THE SYSTEM (OUTDOOR + INDOOR).										

Multipliers for determining the performance with other indoor section.

Air Handler	Coil	MBH	COP	KW
–	FC/MC/PC35	0.98	1.06	0.92
–	FC/MC/PC37	0.98	1.02	0.95
–	FC/MC/PC43	0.98	1.02	0.95
AHE24B	–	0.98	0.98	1.00
AHE30B	–	0.98	0.98	1.00
AHX36	–	1.00	0.99	1.01
AV*36	–	0.98	0.97	1.01
F6FP030	–	1.00	1.02	0.98
F6FP036	–	0.99	0.99	1.01
MV12B	FC/MC35B	0.99	1.01	0.98
MV12B	FC/MC43B	1.00	0.97	1.04
MX12B	FC/MC35B	0.98	0.97	1.01
MX12B	FC/MC43B	0.98	0.98	1.01

Furnace	Coil	MBH	COP	KW
T*(8,L)X*A12	FC/MC/PC32A	0.98	0.97	1.01
T*(8,L)X*B12	FC/MC/PC35B	0.99	0.97	1.03
T*(8,L)X*C16	FC/MC/PC35C	0.99	0.97	1.03
T*(8,L)X*C20	FC/MC/PC35C	0.99	0.98	1.01
T*9X*B12	FC/MC/PC35B	0.98	0.99	0.99
T*9X*C16	FC/MC/PC35C	0.98	1.00	0.98
T*9X*C20	FC/MC/PC35C	0.99	0.98	1.02

Furnace	Coil	MBH	COP	KW
T*(8,L)X*A12	FC/MC/PC37A	0.99	0.94	1.05
T*(8,L)X*B12	FC/MC/PC43B	0.99	0.94	1.06
T*(8,L)X*C16	FC/MC/PC43C	0.99	0.94	1.06
T*(8,L)X*C20	FC/MC/PC43C	0.99	0.95	1.05
T*9X*B12	FC/MC/PC43B	0.99	0.94	1.05
T*9X*C16	FC/MC/PC43C	0.99	0.97	1.03
T*9X*C20	FC/MC/PC43C	0.99	0.97	1.02
(Y*LC/T*8V/T*LV)*A12	FC/MC/PC32A	0.99	1.02	0.97
(Y*LC/T*8V/T*LV)*B12	FC/MC/PC35B	0.99	1.01	0.98
(Y*LC/T*8V/T*LV)*C16	FC/MC/PC35C	0.98	1.00	0.98
(Y*LC/T*8V/T*LV)*C20	FC/MC/PC35C	0.98	1.01	0.97
(Y*9C/T*9V)*B12	FC/MC/PC35B	1.00	1.01	0.99
(Y*9C/T*9V)*C16	FC/MC/PC35C	1.00	0.99	1.01
(Y*9C/T*9V)*C20	FC/MC/PC35C	0.98	1.01	0.97
(Y*LC/T*8V/T*LV)*A12	FC/MC/PC37A	0.99	0.99	1.01
(Y*LC/T*8V/T*LV)*B12	FC/MC/PC43B	0.99	0.98	1.01
(Y*LC/T*8V/T*LV)*C16	FC/MC/PC43C	0.99	0.98	1.01
(Y*LC/T*8V/T*LV)*C20	FC/MC/PC43C	0.98	0.98	1.00
(Y*9C/T*9V)*B12	FC/MC/PC43B	1.00	0.97	1.03
(Y*9C/T*9V)*C16	FC/MC/PC43C	1.00	0.97	1.04
(Y*9C/T*9V)*C20	FC/MC/PC43C	1.01	0.97	1.04

HEATING PERFORMANCE DATA										
OUTDOOR UNIT MODEL NO.		**YZF03013(C)**								
INDOOR COIL MODEL NO.		**AHX36**								
AIR TEMP. ENTERING OUTDOOR UNIT	**AIR TEMP. ENTERING INDOOR COIL**	ID CFM								
		800			1000			1200		
		MBH	COP	KW	MBH	COP	KW	MBH	COP	KW
60	60	34.7	4.8	2.13	35.2	5.0	2.05	35.8	5.3	1.98
	70	34.0	4.2	2.36	34.5	4.4	2.28	35.1	4.7	2.20
	80	33.2	3.8	2.60	33.8	3.9	2.51	34.4	4.2	2.42
47	60	30.0	4.4	2.02	30.2	4.5	1.98	30.4	4.6	1.93
	70	29.4	3.8	2.25	29.6	4.0	2.17	29.8	4.2	2.08
	80	28.7	3.4	2.48	29.0	3.5	2.41	29.2	3.7	2.34
40	60	26.4	3.9	1.97	26.9	4.1	1.94	27.3	4.2	1.91
	70	26.2	3.5	2.20	26.5	3.6	2.16	26.9	3.7	2.11
	80	26.0	3.2	2.42	26.2	3.2	2.37	26.5	3.3	2.32
30	60	24.0	3.7	1.91	23.5	3.7	1.88	23.0	3.6	1.86
	70	23.1	3.2	2.12	23.0	3.2	2.10	23.0	3.3	2.07
	80	22.1	2.8	2.35	22.5	2.9	2.31	22.9	3.0	2.27
17	60	18.9	3.0	1.82	19.1	3.1	1.82	19.4	3.1	1.82
	70	18.8	2.7	2.04	19.0	2.8	2.01	19.3	2.9	1.97
	80	18.4	2.4	2.25	18.7	2.5	2.20	18.9	2.6	2.16
10	60	16.5	2.7	1.79	15.5	2.6	1.78	14.5	2.4	1.76
	70	16.4	2.4	1.98	16.0	2.4	1.96	15.7	2.4	1.93
	80	16.2	2.2	2.18	16.5	2.3	2.14	16.8	2.3	2.11
NOTE: ALL CAPACITIES ARE NET, WITH INDOOR FAN HEAT ALREADY DEDUCTED. KW VALUES ARE FOR THE SYSTEM (OUTDOOR + INDOOR).										

Multipliers for determining the performance with other indoor section.

Air Handler	Coil	MBH	COP	KW
–	FC/MC/PC37	1.00	1.07	0.94
–	FC/MC/PC43	1.00	1.07	0.94
AHE36C	–	0.99	0.99	1.01
AV*36	–	0.99	0.99	1.01
MV12B	FC/MC43B	1.00	1.02	0.99
MV16C	FC/MC43C	1.00	1.01	0.99
MX12B	FC/MC43B	1.01	1.00	1.01

Furnace	Coil	MBH	COP	KW
T*(8,L)X*A12	FC/MC/PC37A	1.01	1.00	1.02
T*(8,L)X*B12	FC/MC/PC43B	1.01	1.00	1.02
T*(8,L)X*C16	FC/MC/PC43C	0.99	1.00	0.99
T*(8,L)X*C20	FC/MC/PC43C	0.98	1.02	0.97
T*9X*B12	FC/MC/PC43B	1.01	0.99	1.02
T*9X*C16	FC/MC/PC43C	1.01	0.98	1.03
(Y*LC/T*8V/T*LV)*A12	FC/MC/PC37A	1.00	1.04	0.97
(Y*LC/T*8V/T*LV)*B12	FC/MC/PC43B	1.01	1.03	0.98
(Y*LC/T*8V/T*LV)*C16	FC/MC/PC43C	1.00	1.00	1.00
(Y*LC/T*8V/T*LV)*C20	FC/MC/PC43C	0.99	0.98	1.01
(Y*9C/T*9V)*B12	FC/MC/PC43B	1.01	1.04	0.97
(Y*9C/T*9V)*C16	FC/MC/PC43C	1.01	1.03	0.98
(Y*9C/T*9V)*C20	FC/MC/PC43C	1.00	1.02	0.99

HEATING PERFORMANCE DATA										
OUTDOOR UNIT MODEL NO.		**YZF03613(C)**								
INDOOR COIL MODEL NO.		**AHX42**								
AIR TEMP. ENTERING OUTDOOR UNIT	**AIR TEMP. ENTERING INDOOR COIL**	ID CFM								
		1000			1200			1400		
		MBH	COP	KW	MBH	COP	KW	MBH	COP	KW
60	60	43.2	4.4	2.85	43.2	4.5	2.81	43.2	4.6	2.77
	70	42.3	3.9	3.19	42.4	3.9	3.16	42.5	4.0	3.13
	80	41.4	3.4	3.55	41.6	3.5	3.52	41.9	3.5	3.49
47	60	37.1	4.1	2.65	36.8	4.1	2.61	36.6	4.2	2.57
	70	36.3	3.6	2.97	36.2	4.0	2.66	36.2	4.5	2.34
	80	35.5	3.2	3.29	35.6	3.2	3.29	35.8	3.2	3.29
40	60	33.4	3.8	2.58	33.3	3.8	2.56	33.2	3.8	2.55
	70	32.7	3.3	2.88	32.8	3.3	2.88	32.9	3.4	2.87
	80	32.1	2.9	3.20	32.3	3.0	3.20	32.5	3.0	3.20
30	60	29.2	3.5	2.44	29.2	3.5	2.43	29.1	3.5	2.43
	70	28.6	3.0	2.74	28.6	3.0	2.76	28.6	3.0	2.77
	80	27.9	2.7	3.05	28.0	2.7	3.08	28.2	2.7	3.11
17	60	23.5	2.4	2.91	23.6	2.6	2.63	23.7	3.0	2.34
	70	23.1	2.3	2.88	23.3	2.8	2.45	23.5	3.4	2.01
	80	22.5	2.3	2.87	22.9	2.6	2.56	23.2	3.0	2.24
10	60	20.8	2.9	2.12	20.1	3.1	1.90	19.4	3.4	1.68
	70	20.4	2.5	2.36	19.9	2.8	2.07	19.4	3.2	1.79
	80	19.9	2.2	2.60	19.6	2.6	2.25	19.4	3.0	1.90
NOTE: ALL CAPACITIES ARE NET, WITH INDOOR FAN HEAT ALREADY DEDUCTED. KW VALUES ARE FOR THE SYSTEM (OUTDOOR + INDOOR).										

Multipliers for determining the performance with other indoor sections.

Air Handler	Coil	MBH	COP	KW
–	FC/MC/PC48	0.98	1.06	0.93
–	FC/MC/PC60	0.98	1.02	0.97
AHE42D	–	0.98	0.99	1.00
AHE48D	–	0.97	0.99	1.00
AHX48	–	1.00	0.98	1.02
AV*48	–	1.01	0.96	1.05
F6FP042	–	1.01	1.00	1.02
F6FP048	–	1.00	0.97	1.03
MV12D	FC/MC48D	0.99	1.00	1.00
MV16C	FC/MC48C	1.00	1.02	0.98
MV12D	FC/MC60D	1.01	0.98	1.03
MX12D	FC/MC48D	0.98	0.99	0.99
MX16C	FC/MC48C	0.99	1.00	0.99
MX12D	FC/MC60D	0.98	0.94	1.05

Furnace	Coil	MBH	COP	KW
T*(8,L)X*C16	FC/MC/PC48C	0.99	1.00	1.00
T*(8,L)X*C20	FC/MC/PC48C	1.00	0.99	1.01
T*9X*C16	FC/MC/PC48C	1.01	1.01	1.00
T*9X*C20	FC/MC/PC48C	1.00	1.02	0.98
T*9X*D20	FC/MC/PC48D	1.01	1.00	1.01
T*(8,L)X*C16	FC/PC60C	1.00	0.96	1.04
T*(8,L)X*C20	FC/PC60C	1.01	0.96	1.06

Furnace	Coil	MBH	COP	KW
T*9X*C16	FC/PC60C	1.02	0.97	1.05
T*9X*C20	FC/PC60C	1.01	0.97	1.05
T*9X*D20	FC/MC/PC60D	1.01	0.94	1.07
T*(8,L)X*C16	UC48C	1.00	0.96	1.04
T*(8,L)X*C20	UC48C	1.01	0.97	1.04
T*9X*C16	UC48C	1.01	0.99	1.03
T*9X*C20	UC48C	1.01	0.99	1.02
T*9X*D20	UC48D	1.01	0.98	1.03
T*(8,L)X*C16	UC60C	1.00	0.96	1.04
T*(8,L)X*C20	UC60C	1.01	0.97	1.04
T*9X*C16	UC60C	1.01	0.98	1.04
T*9X*C20	UC60C	1.01	0.99	1.02
T*9X*D20	UC60D	1.01	0.95	1.06
(Y*LC/T*8V/T*LV)*C16	FC/MC/PC48C	1.00	1.03	0.98
(Y*LC/T*8V/T*LV)*C20	FC/MC/PC48C	1.00	1.02	0.98
(Y*9C/T*9V)*D20	FC/MC/PC48D	1.01	1.02	0.99
(Y*LC/T*8V/T*LV)*C16	FC/PC60C	1.01	0.98	1.03
(Y*LC/T*8V/T*LV)*C20	FC/PC60C	1.01	0.98	1.04
(Y*9C/T*9V)*D20	FC/MC/PC60D	1.02	0.99	1.03
(Y*LC/T*8V/T*LV)*C16	UC48C	1.01	0.99	1.02
(Y*LC/T*8V/T*LV)*C20	UC48C	1.01	0.98	1.03
(Y*LC/T*8V/T*LV)*C16	UC60C	1.01	0.99	1.02
(Y*LC/T*8V/T*LV)*C20	UC60C	1.01	0.99	1.02

HEATING PERFORMANCE DATA										
OUTDOOR UNIT MODEL NO.		**YZF04213(C)**								
INDOOR COIL MODEL NO.		**AHX60**								
AIR TEMP. ENTERING OUTDOOR UNIT	**AIR TEMP. ENTERING INDOOR COIL**	ID CFM								
		1200			1400			1600		
		MBH	COP	KW	MBH	COP	KW	MBH	COP	KW
60	60	44.9	5.2	2.54	46.3	5.2	2.63	47.7	5.1	2.72
	70	42.9	4.5	2.78	44.2	4.5	2.88	45.6	4.5	2.97
	80	41.0	4.0	3.03	42.2	4.0	3.12	43.4	4.0	3.21
47	60	38.1	3.7	2.99	39.0	4.0	2.83	39.9	4.4	2.66
	70	36.7	3.6	2.97	37.6	3.9	2.84	38.4	4.2	2.70
	80	35.3	3.5	2.95	36.1	3.5	3.06	36.9	3.4	3.17
40	60	34.7	4.2	2.43	35.6	4.1	2.54	36.5	4.1	2.64
	70	32.9	3.6	2.67	33.9	3.6	2.78	35.0	3.6	2.89
	80	31.2	3.1	2.91	32.3	3.1	3.02	33.4	3.1	3.13
30	60	26.7	3.4	2.32	28.9	3.4	2.46	31.0	3.5	2.61
	70	26.9	3.1	2.58	28.3	3.0	2.72	29.7	3.0	2.86
	80	27.2	2.8	2.85	27.7	2.7	2.97	28.3	2.7	3.09
17	60	26.1	3.3	2.32	25.5	3.1	2.45	24.9	2.8	2.57
	70	25.4	2.8	2.68	25.0	2.7	2.73	24.6	2.6	2.77
	80	18.0	1.9	2.83	17.8	1.8	2.89	17.6	1.7	2.95
10	60	28.3	3.3	2.49	28.6	3.3	2.53	28.8	3.3	2.57
	70	21.5	2.4	2.64	21.8	2.4	2.70	22.1	2.3	2.75
	80	14.7	1.5	2.78	15.0	1.5	2.86	15.3	1.5	2.93
NOTE: ALL CAPACITIES ARE NET, WITH INDOOR FAN HEAT ALREADY DEDUCTED. KW VALUES ARE FOR THE SYSTEM (OUTDOOR + INDOOR).										

Multipliers for determining the performance with other indoor section.

Air Handler	Coil	MBH	COP	KW
–	FC/MC62	1.06	1.09	0.97
AHE60D	–	1.00	1.00	1.00
F6FP060	–	1.01	1.02	0.99
MV20D	FC/MC62D	1.01	1.01	0.99
MX20D	FC/MC62D	1.05	1.00	1.05

Furnace	Coil	MBH	COP	KW
T*(8,L)X*C16	FC/MC62D	1.00	1.01	0.99
T*(8,L)X*C20	FC/MC62D	1.01	1.00	1.01
T*9X*C16	FC/MC62D	1.01	1.02	0.99
T*9X*C20	FC/MC62D	1.01	1.00	1.01
T*9X*D20	FC/MC62D	1.01	1.00	1.01
(Y*LC/T*8V/T*LV)*C16	FC/MC62D	1.01	1.03	0.98
(Y*LC/T*8V/T*LV)*C20	FC/MC62D	1.01	1.03	0.98
(Y*9C/T*9V)*D20	FC/MC62D	1.01	1.03	0.98

HEATING PERFORMANCE DATA										
OUTDOOR UNIT MODEL NO.		**YZF04813(C)**								
INDOOR COIL MODEL NO.		**AHX60**								
AIR TEMP. ENTERING OUTDOOR UNIT	**AIR TEMP. ENTERING INDOOR COIL**	ID CFM								
		1400			1600			1800		
		MBH	COP	KW	MBH	COP	KW	MBH	COP	KW
60	60	60.5	5.3	3.37	60.9	5.1	3.47	61.2	5.0	3.57
	70	58.3	4.5	3.80	58.8	4.4	3.89	59.3	4.4	3.98
	80	56.1	3.9	4.23	56.7	3.9	4.29	57.3	3.9	4.36
47	60	51.0	4.3	3.51	51.4	4.2	3.60	51.8	4.1	3.69
	70	49.8	3.8	3.86	50.2	3.8	3.85	50.6	3.9	3.84
	80	48.5	3.4	4.21	48.9	3.3	4.33	49.3	3.2	4.45
40	60	43.1	3.8	3.30	45.3	3.9	3.41	47.5	4.0	3.52
	70	43.2	3.4	3.77	44.3	3.4	3.86	45.3	3.4	3.96
	80	43.3	3.0	4.24	43.2	2.9	4.32	43.1	2.9	4.41
30	60	38.3	3.5	3.21	39.7	3.5	3.34	41.1	3.5	3.47
	70	38.4	3.2	3.52	39.2	3.1	3.67	40.0	3.1	3.81
	80	38.6	2.9	3.85	38.7	2.8	4.00	38.9	2.7	4.16
17	60	33.2	3.1	3.12	33.8	3.1	3.24	34.3	3.0	3.36
	70	32.9	2.7	3.59	33.4	2.7	3.60	33.9	2.8	3.61
	80	32.1	2.4	3.94	32.6	2.4	3.95	33.1	2.5	3.96
10	60	29.1	2.8	3.03	29.5	2.8	3.10	29.9	2.8	3.18
	70	28.9	2.6	3.32	29.4	2.5	3.41	29.9	2.5	3.50
	80	28.6	2.3	3.62	29.2	2.3	3.72	29.9	2.3	3.82
NOTE: ALL CAPACITIES ARE NET, WITH INDOOR FAN HEAT ALREADY DEDUCTED. KW VALUES ARE FOR THE SYSTEM (OUTDOOR + INDOOR).										

Multipliers for determining the performance with other indoor sections.

Air Handler	Coil	MBH	COP	KW
–	FC/MC62	0.94	0.99	0.95
–	FC64	0.94	0.96	0.98
AHE60D	–	0.94	0.94	0.99
F6FP060	–	1.00	1.00	1.00
MV20D	FC/MC62D	1.01	1.02	0.99
MV20D	FC64D	1.02	0.99	1.03
MX20D	FC/MC62D	0.94	0.93	1.01
MX20D	FC64D	0.94	0.90	1.04

Furnace	Coil	MBH	COP	KW
T*(8,L)X*C20	FC/MC62D	1.02	1.01	1.01
T*9X*C20	FC/MC62D	1.01	1.03	0.98
T*(8,L)X*C16	FC64D	1.02	1.00	1.02
T*(8,L)X*C20	FC64D	1.02	0.99	1.03
T*9X*C16	FC64D	1.02	1.00	1.02
T*9X*C20	FC64D	1.02	0.99	1.03
T*9X*D20	FC64D	1.02	1.00	1.02
(Y*LC/T*8V/T*LV)*C16	FC64D	1.02	1.01	1.01
(Y*LC/T*8V/T*LV)*C20	FC64D	1.02	1.00	1.02
(Y*9C/T*9V)*C16	FC64D	1.03	1.02	1.01

HEATING PERFORMANCE DATA - HIGH CFM 2-STAGE OPERATION										
OUTDOOR UNIT MODEL NO.		**YZF06013(C)**								
INDOOR COIL MODEL NO.		**AHX60**								
AIR TEMP. ENTERING OUTDOOR UNIT	**AIR TEMP. ENTERING INDOOR COIL**	ID CFM								
		1650			1850			2050		
		MBH	COP	KW	MBH	COP	KW	MBH	COP	KW
60	60	71.2	4.4	4.79	72.1	4.5	4.69	72.9	4.7	4.60
	70	69.7	3.8	5.31	70.7	4.0	5.19	71.8	4.1	5.07
	80	68.3	3.4	5.83	69.4	3.6	5.69	70.6	3.7	5.55
47	60	61.1	4.0	4.52	61.7	4.1	4.46	62.3	4.2	4.40
	70	60.1	3.5	5.05	60.7	3.6	5.01	61.3	3.6	4.97
	80	59.0	3.1	5.56	59.7	3.2	5.45	60.3	3.3	5.34
40	60	54.8	3.6	4.45	55.2	3.7	4.38	55.7	3.8	4.30
	70	53.8	3.2	4.94	54.3	3.3	4.86	54.8	3.4	4.78
	80	52.9	2.9	5.43	53.4	2.9	5.34	53.9	3.0	5.26
30	60	45.9	3.2	4.20	45.0	3.2	4.18	44.0	3.1	4.16
	70	46.4	2.9	4.71	46.1	2.9	4.67	45.8	2.9	4.63
	80	47.0	2.6	5.22	47.2	2.7	5.15	47.5	2.7	5.09
17	60	38.7	2.8	4.09	39.2	2.8	4.06	39.7	2.9	4.04
	70	38.6	2.7	4.25	38.6	2.7	4.23	38.7	2.7	4.20
	80	36.6	2.3	4.64	36.2	2.3	4.60	35.7	2.3	4.55
10	60	35.6	2.8	3.76	35.9	2.8	3.78	36.2	2.8	3.80
	70	35.3	2.5	4.13	35.6	2.5	4.14	35.9	2.5	4.15
	80	35.0	2.3	4.52	35.3	2.3	4.51	35.7	2.3	4.51
NOTE: ALL CAPACITIES ARE NET, WITH INDOOR FAN HEAT ALREADY DEDUCTED. KW VALUES ARE FOR THE SYSTEM (OUTDOOR + INDOOR).										

Multipliers for determining the performance with other indoor sections.

Air Handler	Coil	MBH	COP	KW
–	FC/MC62	1.02	1.07	0.96
–	FC64	1.04	1.05	0.99
AHE60D	–	1.00	1.03	0.97
MV20D	FC/MC62D	0.98	1.00	0.98
MV20D	FC64D	0.99	0.99	1.01
MX20D	FC/MC62D	1.01	0.99	1.02
MX20D	FC64D	1.04	0.99	1.04

Furnace	Coil	MBH	COP	KW
T*(8,L)X*C16	FC/MC62D	0.99	1.02	0.97
T*9X*C16	FC/MC62D	0.99	1.02	0.97
T*9X*C20	FC/MC62D	0.98	1.02	0.97
T*9X*D20	FC/MC62D	0.99	1.03	0.96
T*(8,L)X*C16	FC64D	0.99	0.99	1.00
T*(8,L)X*C20	FC64D	0.99	0.98	1.01
T*9X*C16	FC64D	0.99	1.00	0.99
T*9X*C20	FC64D	0.99	1.00	0.99
T*9X*D20	FC64D	0.99	1.00	0.99
(Y*LC/T*8V/T*LV)*C16	FC/MC62D	0.99	1.03	0.96
(Y*LC/T*8V/T*LV)*C20	FC/MC62D	0.99	1.02	0.97
(Y*9C/T*9V)*C16	FC/MC62D	0.99	1.04	0.96
(Y*9C/T*9V)*C20	FC/MC62D	1.00	1.05	0.95
(Y*9C/T*9V)*D20	FC/MC62D	0.99	1.04	0.96
(Y*LC/T*8V/T*LV)*C16	FC64D	1.00	1.01	0.99
(Y*LC/T*8V/T*LV)*C20	FC64D	0.99	1.00	0.99
(Y*9C/T*9V)*C16	FC64D	1.00	1.02	0.98
(Y*9C/T*9V)*C20	FC64D	1.00	1.02	0.98
(Y*9C/T*9V)*D20	FC64D	1.00	1.02	0.98

Subject to change without notice. Published in U.S.A.
Copyright © 2012 by Johnson Controls, Inc. All rights reserved.

632151-YTG-D-0512
Supersedes: 632151-YTG-C-0112

York International Corp.
5005 York Drive
Norman, OK 73069