YORK®
Heating and Air Conditioning

TECHNICAL GUIDE

AFFINITY™ SERIES

SPLIT-SYSTEM HEAT PUMPS

16 SEER – R-410A – 1 PHASE

2 THRU 5 NOMINAL TONS

MODELS: YZF024 THRU 060

AHRI CERTIFIED™ www.ahridirectory.org Unitary Small HP AHRI Standard 210/240 Certification applies only when the complete system is listed with AHRI

Good Housekeeping Promises — Limited Warranty to Consumers — Replacement or Refund if Defective

CSA® C US

ENERGY STAR

ISO 9001 Registration — ISO 9001 Certified Quality Management System

Due to continuous product improvement, specifications are subject to change without notice.

Visit us on the web at
www.upgnet.com and www.york.com

Additional rating information can be found at
www.ahridirectory.org

WARRANTY SUMMARY*

Extended 10-Years limited parts warranty.
Extended Lifetime limited compressor warranty.

Extended parts and compressor warranties require online registration within 90 days of purchase for replacement or closing for new home construction.

* Does not apply to R-22 models, 3-Phase models, or internet sales.
See Limited Warranty certificate in User's Information Manual for details.

DESCRIPTION

The 16 SEER Series unit is the outdoor part of a versatile climate system. It is designed with a matching indoor coil component from Johnson Controls Unitary Products. Available for typical applications, this climate system is supported with accessories and documents to serve specific functions.

FEATURES

- **Superior Coil Protection -** A stamped, decorative metal coil guard protects the tube-in-fin coil from debris and other damaging material.
- **Protected Compressor -** The compressor is safeguarded against abnormal pressures and temperatures by an internal pressure relief valve, an internal temperature sensor, and factory high and low pressure system controls. A factory installed liquid line filter-drier further protects the compressor against moisture and debris.
- **Environmentally Friendly Refrigerant -** The next generation refrigerant R-410A delivers environmentally friendly performance with zero ozone depletion.
- **Durable Finish -** An automotive quality finish provides the ultimate protection from harmful UV rays and rust creep, ensuring a long-lasting, high quality appearance. A powder-paint topcoat is applied over a baked-on primer using a galvanized, zinc coated steel base material. The result is a finish that has been proven in testing to provide 33% greater durability than conventional powder-coat finishes.
- **Hot Heat Pump -** An optional mode that slows the indoor fan for higher register air temperatures and premium comfort.
- **QuietDrive™ System -** Features combination of swept-wing fan, composite base pan, isolated compressor compartment, and single-stage compressor to reduce overall sound to a mere whisper. The 5-ton system utilizes a two-stage compressor.
- **Low RPM Fan Motor -** Helps to reduce airflow noise.
- **Swept Wing Fan -** A fan design boasting technology adapted from aeronautic and defense engineering provides for whisper-quiet operation by allowing air to flow smoothly and efficiently across the fan tips.
- **Composite Base Pan -** The strong and durable composite base pan provides added strength while resisting rust and corrosion, as well as reducing sound and vibration.
- **Isolated Compressor Compartment -** A molded composite bulkhead isolates the refrigeration components and the compressor from the rest of the unit, reducing sound and vibration.
- **Lower Installed Cost -** Designed to provide enhanced installability by featuring a slide-down control compartment that allows easy access to control components, along with angled service valves to reduce overall installation time and cost. Factory charged for a 15 foot lineset.
- **Factory Installed Filter-Drier -** A factory installed, solid core liquid line filter-drier removes harmful debris and moisture from the system.
- **Easy Service Access -** A full end, full service access panel with handle makes for easy entry to internal components.
- **Communications Capable -** Requiring only a simple 4-wire installation, the communicating capability enables the use of the Touch Screen Communicating Control, allowing real time visibility of system operation and the use of diagnostic features, while still maintaining the ability to function with a traditional thermostat.
- **Complete System Control -** These heat pumps utilize the unique York Guard VI microprocessor defrost control system to provide optimal comfort as well as monitor the overall system for reliable operation. In the event improper operating conditions occur (high temperature and/or high pressure), the system will automatically shut the system down to extend the life of the heat pump. The defrost control features an internal memory to aid the technician in troubleshooting, reducing service time and cost.
- **Premium System Warranty* -** Limited lifetime compressor warranty when registered online within 90 days of installation.
- **Agency Listed -** Safety certified by CSA to UL 1995 / CSA 22.2. Performance certified to ANSI/AHRI Standard 210/240 in accordance with the Unitary Small Equipment certification program.

Physical and Electrical Data

Model		YZF02413(C)	YZF03013(C)	YZF03613(C)	YZF04214(C)	YZF04813(C)	YZF06013(C)
Unit Supply Voltage		208-230V, 1ϕ, 60Hz					
Normal Voltage Range [1]		187 to 252					
Minimum Circuit Ampacity		17.5	17.3	22.6	23.7	26.9	33.8
Max. Overcurrent Device Amps [2]		30	30	35	40	45	50
Min. Overcurrent Device Amps [3]		20	20	25	25	30	35
Compressor Amps	Type	Scroll	Scroll	Scroll	Scroll	Scroll	2-Stage Scroll
	Rated Load	13.4	12.8	17	17.9	20.5	26
	Locked Rotor	58.3	64	77	112	115	118
Crankcase Heater		No	No	No	No	No	No
Factory External Discharge Muffler		Yes	Yes	Yes	Yes	Yes	Yes
Factory External Check Valve		No	No	No	No	No	No
HS Kit Required with TXV [4]		No	No	No	No	No	No
Fan Diameter Inches		24	24	24	24	24	24
Fan Motor	Rated HP	1/8	1/4	1/4	1/4	1/4	1/4
	Rated Load Amps	0.7	1.3	1.3	1.3	1.3	1.3
	Nominal RPM	1075	850	850	850	850	850
	Nominal CFM	2750	3800	3800	3800	3400	3700
Coil	Face Area Sq. Ft.	20.6	23.6	23.6	23.6	23.6	23.6
	Rows Deep	1	1	1	1	2	2
	Fins / Inch	22	22	22	22	22	14
Liquid Line Set OD (Field Installed)		3/8	3/8	3/8	3/8	3/8	3/8
Vapor Line Set OD (Field Installed)		3/4	3/4	3/4	7/8	7/8	1-1/8
Unit Charge (Lbs. - Oz.) [5]		9 - 3	9 - 13	10 - 10	11 - 7	14 - 5	14 - 11
Charge Per Foot, Oz.		0.62	0.62	0.62	0.67	0.67	0.75
Operating Weight Lbs.		199	228	230	234	283	298

1. Rated in accordance with AHRI Standard 110-2012, utilization range “A”.
2. Dual element fuses or HACR circuit breaker. Maximum allowable overcurrent protection.
3. Dual element fuses or HACR circuit breaker. Minimum recommended overcurrent protection.
4. See Hard Start Kit Accessory Installation Manual for Hard Start Kit part number for each model.
5. The Unit Charge is correct for the outdoor unit, smallest matched indoor unit, and 15 feet of refrigerant tubing. For tubing lengths other than 15 feet, add or subtract the amount of refrigerant, using the difference in length multiplied by the per foot value.

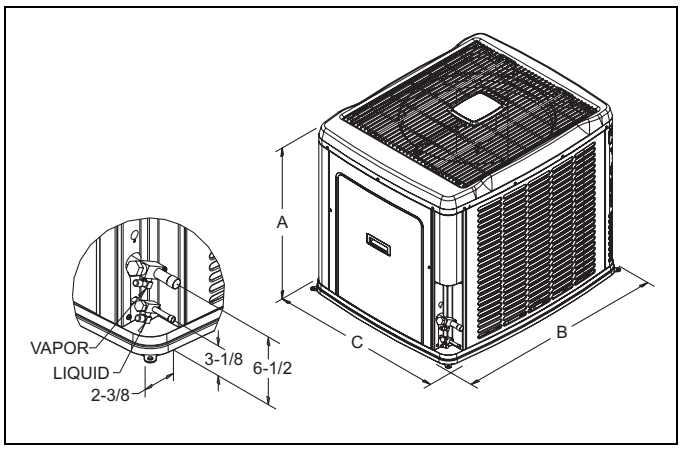

Unit Model	Dimensions (Inches)			Refrigerant Connection Service Valve Size	
	A	B	C	Liquid	Vapor
024	40	37	31	3/8	3/4
030	40	42-1/4	34		
036	40	42-1/4	34		
042	40	42-1/4	34		7/8
048	40	42-1/4	34		
060	40	42-1/4	34		7/8*

* Adapter fitting required for 1-1/8” line set.

Overall height is from bottom of base pan to top of fan guard.
Overall length and width include screw heads.

System Charge for Various Matched Systems						
Outdoor Unit	YZF02413(C)	YZF03013(C)	YZF03613(C)	YZF04214(C)	YZF04813(C)	YZF06013(C)
Required TXV [1,2]	4N1	4H1	4H1	4J1	4J1	4K1
Indoor Unit [3,4,5]	**Additional Charge, Oz**					
AHE24B	TXV + 0	–	–	–	–	–
AHE30B	TXV + 0	–	–	–	–	–
AHE36C	–	TXV + 0	–	–	–	–
AHE42D	–	–	TXV + 0	–	–	–
AHE48D	–	–	TXV + 20	TXV + 0	–	–
AHE60D	–	–	–	TXV + 5	TXV + 0	TXV + 0
AHR24B	TXV + 0	–	–	–	–	–
AHR36B	–	TXV + 0	–	–	–	–
AHR42C	–	–	TXV + 0	–	–	–
AHR60D	–	–	–	TXV + 0	TXV + 0	–
AHV24B	TXV + 0	–	–	–	–	–
AHV30B	TXV + 0	–	–	–	–	–
AHV36C	TXV + 12	TXV + 0	–	–	–	–
AHV42D	–	–	TXV + 0	–	–	–
AHV48D	–	–	TXV + 20	TXV + 0	–	–
AHV60D	–	–	–	TXV + 5	TXV + 0	TXV + 0
AV*36	TXV + 12	TXV + 0	–	–	–	–
AV*48	–	–	TXV + 20	TXV + 0	–	–
FC/MC/PC32	TXV + 0	–	–	–	–	–
FC/MC/PC35	TXV + 0	–	–	–	–	–
FC/MC/PC37	TXV + 12	TXV + 0	–	–	–	–
FC/MC/PC43	TXV + 12	TXV + 0	–	–	–	–
FC/MC/PC48	–	–	TXV + 0	–	–	–
FC/MC/PC60	–	–	TXV + 20	TXV + 0	–	–
FC/PC62	–	–	–	TXV + 5	TXV + 0	TXV + 0
FC64	–	–	–	–	TXV + 8	TXV + 8
UC48	–	–	TXV + 15	–	–	–
UC60	–	–	TXV + 31	TXV + 2	–	–
Some of the combinations shown in the above System Charge table require Advanced Main Air Circulating Fan indoor product. For approved coil only matches, please see the “COOLING CAPACITY - Upflow, Downflow & Horizontal Furnaces and Coils” table.						

FOOTNOTES:

1. For applications requiring a TXV use S1-1TVM*** series kit.
2. A TXV kit must be used with these indoor units to obtain system performance.
3. Systems matched with furnaces or air handlers not equipped with blower-off delays may require blower Time Delay Kit S1-2FD06700224.
4. PC coils cannot be used in downflow or horizontal applications. FC coils cannot be used in horizontal applications.
5. Refer to Cooling and Heating Performance Data tables for actual performance for specified system matches.

Note: If a TXV is factory installed on the coil, it must be replaced with the listed TXV.

PROCEDURES:

1. Unit factory charge listed on the unit nameplate includes refrigerant for the outdoor unit, the smallest matched indoor unit, and 15 feet of interconnecting line tubing.
2. Verify the TXV and additional charge required for specific matched indoor unit in the system using the above table.
3. Add additional charge for the amount of interconnecting line tubing greater than 15 feet at the rate specified in Physical and Electrical Data Table.
4. For indoor matches requiring additional charge, the refrigerant needs to be weighed in for specific matched indoor unit and lineset length.
5. Permanently mark the unit nameplate with the total system charge. Total System Charge = Base Charge (as shipped) + charge adder for matched indoor unit + charge adder for line set.

COOLING CAPACITY - With Air Handler Coils

UNIT MODEL	AIR HANDLER		COIL[1] MODEL	COOLING					
	MODEL	WIDTH		STAGE	RATED CFM	NET MBH		SEER	EER
						TOTAL	SENS.		
16 SEER HP WITH AIR HANDLERS									
YZF02413(C)	AHE24B	17.5	–	–	795	23.8	18.0	15.00	12.50
	AHE30B	17.5	–	–	795	23.8	18.0	15.00	12.50
	AHR24B	17.5	–	–	740	23.2	16.8	13.25	11.35
	AHV24B	17.5	–	–	710	22.8	16.7	15.00	12.50
	AHV30B	17.5	–	–	775	23.0	17.3	15.00	12.50
	AHV36C	21.0	–	–	760	23.8	17.6	16.00	13.00
	AV*36	21.0	–	–	725	23.8	17.4	16.00	13.00
	MV12B	17.5	FC/MC35B	–	800	23.6	17.8	15.00	12.50
	MV12B	17.5	FC/MC43B	–	800	24.0	18.6	16.00	13.00
	MX12B	17.5	FC/MC35B	–	815	24.0	18.2	15.00	12.50
	MX12B	17.5	FC/MC43B	–	735	23.8	17.6	15.00	12.50
YZF03013(C)	AHE36C	21.0	–	–	1000	29.0	22.0	16.00	13.00
	AHR36B	17.5	–	–	1060	28.4	21.8	13.25	11.35
	AHV36C	21.0	–	–	895	28.2	20.0	15.75	13.00
	AV*36	21.0	–	–	895	28.2	26.2	16.00	13.00
	MV12B	17.5	FC/MC43B	–	1000	28.8	21.8	16.00	13.00
	MV16C	21.0	FC/MC43C	–	1000	28.8	22.0	16.00	13.00
	MX12B	17.5	FC/MC43B	–	1095	29.2	23.0	16.00	13.00
	MX16C	21.0	FC/MC43C	–	970	28.0	21.8	15.00	12.50
YZF03613(C)	AHE42D	24.5	–	–	1180	34.8	26.0	15.00	12.50
	AHE48D	24.5	–	–	1195	35.4	26.6	15.00	12.50
	AHR42C	21.0	–	–	1230	34.6	28.2	13.25	11.35
	AHV42D	24.5	–	–	1180	35.4	27.0	15.00	12.50
	AHV48D	24.5	–	–	1155	35.2	26.6	15.00	12.50
	AV*48	24.5	–	–	1220	35.2	26.6	15.00	12.50
	MV12D	24.5	FC/MC48D	–	1160	34.8	26.0	15.00	12.50
	MV12D	24.5	FC/MC60D	–	1135	34.6	25.6	15.00	12.50
	MV16C	21.0	FC/MC48C	–	1200	34.6	25.8	15.00	12.50
	MX12D	24.5	FC/MC48D	–	1225	35.2	26.6	15.00	12.50
	MX12D	24.5	FC/MC60D	–	1275	35.2	27.0	15.00	12.50
	MX16C	21.0	FC/MC48C	–	1150	35.0	25.8	15.00	12.50
YZF04214(C)	AHE48D	24.5	–	–	1200	39.5	28.0	15.00	12.50
	AHE60D	24.5	–	–	1385	40.0	29.2	15.00	12.50
	AHR60D	24.5	–	–	1350	39.0	28.2	13.25	11.35
	AHV48D	24.5	–	–	1155	39.5	27.6	15.00	12.50
	AHV60D	24.5	–	–	1340	39.5	28.6	14.50	12.00
	AV*48	24.5	–	–	1220	40.0	28.8	15.00	12.50
	MV16C	21.0	FC60C	–	1200	39.5	28.2	15.00	12.50
	MV20D	24.5	FC/MC60D	–	1300	40.0	29.4	15.00	12.50
	MV20D	24.5	FC/MC62D	–	1400	40.0	28.6	14.50	12.00
	MX16C	21.0	FC60C	–	1150	39.5	28.4	15.00	12.50
	MX20D	24.5	FC/MC60D	–	1295	40.5	29.6	15.00	12.50
	MX20D	24.5	FC/MC62D	–	1470	40.5	30.2	15.00	12.50
YZF04813(C)	AHE60D	24.5	–	–	1565	46.5	34.8	15.00	12.50
	AHR60D	24.5	–	–	1620	46.0	42.5	13.25	11.35
	AHV60D	24.5	–	–	1570	46.5	34.6	15.00	12.50
	MV20D	24.5	FC/MC62D	–	1630	46.5	34.8	15.00	12.50
	MV20D	24.5	FC64D	–	1630	48.0	36.8	15.00	12.50
	MX20D	24.5	FC/MC62D	–	1605	47.0	35.4	15.00	12.50
	MX20D	24.5	FC64D	–	1605	48.0	36.8	15.00	12.50

For notes, see Page 5.

COOLING CAPACITY - With Air Handler Coils (Continued)

UNIT MODEL	AIR HANDLER		COIL[1] MODEL	COOLING					
	MODEL	WIDTH		STAGE	RATED CFM	NET MBH TOTAL	NET MBH SENS.	SEER	EER
16 SEER HP WITH AIR HANDLERS									
YZF06013(C)	AHE60D	24.5	–	1	1160	47.0	30.4	15.00	11.60
				2	1835	56.5	40.5		
	AHV60D	24.5	–	1	1090	45.5	30.2	15.00	11.65
				2	1635	54.5	39.0		
	MV20D	24.5	FC/MC62D	1	1075	46.5	29.8	15.00	11.80
				2	1630	56.0	39.0		
	MV20D	24.5	FC64D	1	1075	48.0	31.2	15.00	12.00
				2	1630	57.5	40.5		
	MX20D	24.5	FC/MC62D	1	1390	49.0	33.0	15.00	11.85
				2	1795	56.5	40.5		
	MX20D	24.5	FC64D	1	1390	50.5	34.4	15.00	12.15
				2	1795	58.5	42.0		

Rated in accordance with DOE test procedures (Federal Register 12-27-79 and 3-18-88) and ANSI/AHRI Standard 210/240.
Cooling MBH based on 80 °F entering air temperature, 50% RH (Relative Humidity), and rated air flow.
EER (Energy Efficiency Ratio) is the total cooling output in BTUs at 95 °F outdoor ambient divided by the total electric power in watt-hours at those conditions.
SEER (Seasonal Energy Efficiency Ratio) is the total cooling output in BTUs during a normal annual usage period for cooling divided by the total electric power input in watt-hours during the same period.

1. MC coils available with a factory installed horizontal drain pan. See price pages for specific model number.

— = Not applicable.
MA Modular Air Handlers use Coil Only Ratings.

COOLING CAPACITY - With Upflow, Downflow, & Horizontal Furnaces and Coils (Coil Only Ratings)

UNIT MODEL	COIL		CFM RANGE (MIN.-MAX.)	STAGE	COOLING				
	MODEL	WIDTH			RATED CFM	NET MBH TOTAL	NET MBH SENS.	SEER[1]	EER
16 SEER HP COIL ONLY RATINGS									
YZF02413(C)	FC/MC/PC32	14.5	600 - 1000	–	800	23.2	17.2	13.25	11.35
	FC/MC/PC35	17.5,21.0	600 - 1000	–	800	23.2	17.2	13.35	11.50
	FC/MC/PC37	14.5	600 - 1000	–	800	23.6	17.5	13.35	11.50
	FC/MC/PC43	17.5,21.0	600 - 1000	–	800	23.6	17.5	13.35	11.50
YZF03013(C)	FC/MC/PC37	14.5	800 - 1200	–	1000	28.4	21.4	14.00	12.00
	FC/MC/PC43	17.5,21.0	800 - 1200	–	1000	28.4	21.4	14.00	12.00
YZF03613(C)	FC/MC/PC48	21.0,24.5	1000 - 1400	–	1200	34.4	25.6	13.35	11.50
	FC/MC/PC60	21.0,24.5	1000 - 1400	–	1200	34.0	25.4	13.35	11.50
	UC48	21.0,24.5	1000 - 1400	–	1200	34.4	25.6	13.25	11.35
	UC60	21.0,24.5	1000 - 1400	–	1200	34.0	25.2	13.25	11.35
YZF04214(C)	FC/MC/PC60	21.0,24.5	1200 - 1600	–	1200	38.5	27.0	13.25	11.35
	FC/MC62	24.5	1200 - 1600	–	1400	39.0	28.0	13.00	11.00
	UC60	21.0,24.5	1200 - 1600	–	1200	38.5	27.4	13.25	11.35
YZF04813(C)	FC/MC62	24.5	1400 - 1800	–	1600	46.0	34.4	13.35	11.50
	FC64	24.5	1400 - 1800	–	1600	47.0	35.6	13.35	11.50
YZF06013(C)	FC/MC62	24.5	1150 - 1550	1	1350	48.0	31.8	15.00	11.10
			1600 - 2000	2	1800	55.5	39.5		
	FC64	24.5	1150 - 1550	1	1350	49.5	33.2	15.00	11.40
			1600 - 2000	2	1800	57.5	41.5		

1. Requires a S1-2FD06700224 Blower Time Delay unless a standard furnace is equipped with one.

MA Modular Air Handlers use Coil Only Ratings.
PSC furnaces, such as the TG8S, TGLS, and TG9S, use Coil Only Ratings.

COOLING CAPACITY - With High Efficiency Motor Furnaces

UNIT MODEL	FURNACE		COIL MODEL[1]	COOLING				
	MODEL	WIDTH		RATED CFM	NET MBH		SEER	EER
					TOTAL	SENS.		
16 SEER HP WITH HIGH EFFICIENCY MOTOR FURNACES[2]								
YZF02413(C)	T*(8,L)V*A12	14.5	FC/MC/PC32A	755	23.4	17.3	15.00	12.50
	T*(8,L)V*A12	14.5	FC/MC/PC37A	765	23.8	17.7	15.00	12.50
	T*(8,L)V*B12	17.5	FC/MC/PC35B	785	23.6	17.6	15.00	12.50
	T*(8,L)V*B12	17.5	FC/MC/PC43B	790	24.0	18.0	15.00	12.50
	T*(8,L)V*C16	21.0	FC/MC/PC35C	775	23.6	17.6	15.00	12.50
	T*(8,L)V*C16	21.0	FC/MC/PC43C	770	24.0	17.8	16.00	13.00
	T*(8,L)V*C20	21.0	FC/MC/PC35C	755	23.6	17.4	15.00	12.50
	T*(8,L)V*C20	21.0	FC/MC/PC43C	740	23.8	17.5	15.00	12.50
	T*(8,L)X*A12	14.5	FC/MC/PC32A	800	23.8	17.9	15.00	12.50
	T*(8,L)X*A12	14.5	FC/MC/PC37A	840	24.0	18.7	15.00	12.50
	T*(8,L)X*B12	17.5	FC/MC/PC35B	850	24.0	18.2	15.00	12.50
	T*(8,L)X*B12	17.5	FC/MC/PC43B	865	24.0	18.7	16.00	13.00
	T*(8,L)X*C16	21.0	FC/MC/PC35C	865	24.0	18.2	15.00	12.50
	T*(8,L)X*C16	21.0	FC/MC/PC43C	855	24.0	18.7	16.00	13.00
	T*(8,L)X*C20	21.0	FC/MC/PC35C	885	24.0	18.1	15.00	12.50
	T*(8,L)X*C20	21.0	FC/MC/PC43C	815	24.0	18.6	16.00	13.00
	T*9(C,V)*B12	17.5	FC/MC/PC35B	815	23.8	18.0	15.00	12.50
	T*9(C,V)*B12	17.5	FC/MC/PC43B	800	24.0	18.5	15.00	12.50
	T*9(C,V)*C16	21.0	FC/MC/PC35C	900	24.0	18.8	15.00	12.50
	T*9(C,V)*C16	21.0	FC/MC/PC43C	810	24.0	18.6	16.00	13.00
	T*9(C,V)*C20	21.0	FC/MC/PC35C	755	23.6	17.4	15.00	12.50
	T*9(C,V)*C20	21.0	FC/MC/PC43C	890	24.0	19.1	16.00	13.00
	T*9V*A10	14.5	FC/MC/PC32A	785	23.4	17.3	14.00	12.00
	T*9V*A10	14.5	FC/MC/PC37A	790	23.6	17.7	14.00	12.00
	T*9X*A10	14.5	FC/MC/PC32A	745	23.2	17.0	14.55	12.00
	T*9X*A10	14.5	FC/MC/PC37A	740	23.4	17.2	14.75	12.00
	T*9X*B12	17.5	FC/MC/PC35B	785	23.8	17.7	15.00	12.50
	T*9X*B12	17.5	FC/MC/PC43B	800	24.0	18.7	16.00	13.00
	T*9X*C16	21.0	FC/MC/PC35C	765	23.6	17.5	15.00	12.50
	T*9X*C16	21.0	FC/MC/PC43C	785	24.0	18.0	16.00	13.00
	T*9X*C20	21.0	FC/MC/PC35C	825	24.0	18.1	15.00	12.50
	T*9X*C20	21.0	FC/MC/PC43C	790	24.0	18.1	16.00	13.00
	Y*(8,L)C*A12	14.5	FC/MC/PC32A	755	23.4	17.3	15.00	12.50
	Y*(8,L)C*A12	14.5	FC/MC/PC37A	765	23.8	17.7	15.00	12.50
	Y*(8,L)C*B12	17.5	FC/MC/PC35B	785	23.6	17.6	15.00	12.50
	Y*(8,L)C*B12	17.5	FC/MC/PC43B	790	24.0	18.0	15.00	12.50
	Y*(8,L)C*C16	21.0	FC/MC/PC35C	775	23.6	17.6	15.00	12.50
	Y*(8,L)C*C16	21.0	FC/MC/PC43C	770	24.0	17.8	16.00	13.00
	Y*(8,L)C*C20	21.0	FC/MC/PC35C	755	23.6	17.4	15.00	12.50
	Y*(8,L)C*C20	21.0	FC/MC/PC43C	740	23.8	17.5	15.00	12.50
	Y*9C*B12	17.5	FC/MC/PC35B	815	23.8	18.0	15.00	12.50
	Y*9C*B12	17.5	FC/MC/PC43B	800	24.0	18.5	15.00	12.50
	Y*9C*C16	21.0	FC/MC/PC35C	900	24.0	18.8	15.00	12.50
	Y*9C*C16	21.0	FC/MC/PC43C	810	24.0	18.6	16.00	13.00
	Y*9C*C20	21.0	FC/MC/PC35C	755	23.6	17.4	15.00	12.50
	Y*9C*C20	21.0	FC/MC/PC43C	890	24.0	19.1	16.00	13.00
YZF03013(C)	T*(8,L)V*A12	14.5	FC/MC/PC37A	950	28.4	21.2	15.00	12.50
	T*(8,L)V*B12	17.5	FC/MC/PC43B	1045	28.8	22.2	15.00	12.50
	T*(8,L)V*C16	21.0	FC/MC/PC43C	1035	29.0	22.4	15.00	12.50
	T*(8,L)V*C20	21.0	FC/MC/PC43C	1025	29.2	22.4	15.00	12.50
	T*(8,L)X*A12	14.5	FC/MC/PC37A	1090	29.2	23.0	15.00	12.50
	T*(8,L)X*B12	17.5	FC/MC/PC43B	1090	29.2	23.0	15.00	12.50

For notes, see Page 9.

COOLING CAPACITY - With High Efficiency Motor Furnaces (Continued)

UNIT MODEL	FURNACE		COIL MODEL[1]	COOLING				
	MODEL	WIDTH		RATED CFM	NET MBH		SEER	EER
					TOTAL	SENS.		
16 SEER HP WITH HIGH EFFICIENCY MOTOR FURNACES[2]								
YZF03013(C)	T*(8,L)X*C16	21.0	FC/MC/PC43C	955	28.8	21.6	15.00	12.50
	T*(8,L)X*C20	21.0	FC/MC/PC43C	870	28.2	20.6	15.00	12.50
	T*9(C,V)*B12	17.5	FC/MC/PC43B	1035	28.8	22.0	15.00	12.50
	T*9(C,V)*C16	21.0	FC/MC/PC43C	1030	28.8	22.2	15.00	12.50
	T*9(C,V)*C20	21.0	FC/MC/PC43C	995	28.8	21.8	15.00	12.50
	T*9X*A10	14.5	FC/MC/PC37A	1025	28.0	21.0	14.00	11.60
	T*9X*C16	21.0	FC/MC/PC43C	1055	29.4	23.0	15.00	12.50
	Y*(8,L)C*A12	14.5	FC/MC/PC37A	950	28.4	21.2	15.00	12.50
	Y*(8,L)C*B12	17.5	FC/MC/PC43B	1045	28.8	22.2	15.00	12.50
	Y*(8,L)C*C16	21.0	FC/MC/PC43C	1035	29.0	22.4	15.00	12.50
	Y*(8,L)C*C20	21.0	FC/MC/PC43C	1025	29.2	22.4	15.00	12.50
	Y*9C*B12	17.5	FC/MC/PC43B	1035	28.8	22.0	15.00	12.50
	Y*9C*C16	21.0	FC/MC/PC43C	1030	28.8	22.2	15.00	12.50
	Y*9C*C20	21.0	FC/MC/PC43C	995	28.8	21.8	15.00	12.50
YZF03613(C)	T*(8,L)V*C16	21.0	FC/MC/PC48C	1195	34.6	25.8	15.00	12.50
	T*(8,L)V*C16	21.0	FC/PC60C	1185	34.8	25.6	15.00	12.50
	T*(8,L)V*C16	21.0	UC48C	1210	34.6	26.0	15.00	12.50
	T*(8,L)V*C16	21.0	UC60C	1195	34.4	25.6	15.00	12.50
	T*(8,L)V*C20	21.0	FC/MC/PC48C	1150	34.6	25.8	15.00	12.50
	T*(8,L)V*C20	21.0	FC/PC60C	1215	35.0	26.4	15.00	12.50
	T*(8,L)V*C20	21.0	UC48C	1155	34.6	26.0	15.00	12.50
	T*(8,L)V*C20	21.0	UC60C	1215	34.4	25.6	15.00	12.50
	T*(8,L)X*C16	21.0	FC/MC/PC48C	1185	34.8	26.0	15.00	12.50
	T*(8,L)X*C16	21.0	FC/PC60C	1190	34.8	25.8	15.00	12.50
	T*(8,L)X*C16	21.0	UC48C	1185	34.8	26.2	15.00	12.50
	T*(8,L)X*C16	21.0	UC60C	1190	34.6	25.8	15.00	12.50
	T*(8,L)X*C20	21.0	FC/MC/PC48C	1270	35.4	27.0	15.00	12.50
	T*(8,L)X*C20	21.0	FC/PC60C	1275	35.4	27.2	15.00	12.50
	T*(8,L)X*C20	21.0	UC48C	1270	35.0	26.8	15.00	12.50
	T*(8,L)X*C20	21.0	UC60C	1275	34.8	26.6	15.00	12.50
	T*9(C,V)*C16	21.0	FC/MC/PC48C	1195	34.8	25.8	15.00	12.50
	T*9(C,V)*C16	21.0	FC/PC60C	1235	35.0	26.0	14.50	12.00
	T*9(C,V)*C20	21.0	FC/MC/PC48C	1315	35.2	27.2	14.50	12.00
	T*9(C,V)*C20	21.0	FC/PC60C	1325	35.4	27.6	14.50	12.50
	T*9(C,V)*D20	24.5	FC/MC/PC48D	1240	35.0	26.6	15.00	12.50
	T*9(C,V)*D20	24.5	FC/MC/PC60D	1225	35.0	26.4	15.00	12.50
	T*9X*C16	21.0	FC/MC/PC48C	1280	35.2	27.0	15.00	12.50
	T*9X*C16	21.0	FC/PC60C	1315	35.4	27.4	15.00	12.50
	T*9X*C16	21.0	UC48C	1280	34.8	26.8	15.00	12.50
	T*9X*C16	21.0	UC60C	1300	34.8	26.8	15.00	12.50
	T*9X*C20	21.0	FC/MC/PC48C	1205	34.6	25.8	15.00	12.50
	T*9X*C20	21.0	FC/PC60C	1240	35.2	26.8	15.00	12.50
	T*9X*C20	21.0	UC48C	1205	34.6	26.0	15.00	12.50
	T*9X*C20	21.0	UC60C	1240	34.4	25.6	15.00	12.50
	T*9X*D20	24.5	FC/MC/PC48D	1240	35.2	26.8	15.00	12.50
	T*9X*D20	24.5	FC/MC/PC60D	1310	35.6	27.6	15.00	12.50
	T*9X*D20	24.5	UC48D	1240	34.6	26.0	15.00	12.50
	T*9X*D20	24.5	UC60D	1310	35.0	27.0	15.00	12.50
	Y*(8,L)C*C16	21.0	FC/MC/PC48C	1195	34.6	25.8	15.00	12.50
	Y*(8,L)C*C16	21.0	FC/PC60C	1185	34.8	25.6	15.00	12.50
	Y*(8,L)C*C16	21.0	UC48C	1210	34.6	26.0	15.00	12.50
	Y*(8,L)C*C16	21.0	UC60C	1195	34.4	25.6	15.00	12.50

For notes, see Page 9.

COOLING CAPACITY - With High Efficiency Motor Furnaces (Continued)

UNIT MODEL	FURNACE		COIL MODEL[1]	COOLING				
	MODEL	WIDTH		RATED CFM	NET MBH		SEER	EER
					TOTAL	SENS.		
16 SEER HP WITH HIGH EFFICIENCY MOTOR FURNACES[2]								
YZF03613(C)	Y*(8,L)C*C20	21.0	FC/MC/PC48C	1150	34.6	25.8	15.00	12.50
	Y*(8,L)C*C20	21.0	FC/PC60C	1215	35.0	26.4	15.00	12.50
	Y*(8,L)C*C20	21.0	UC48C	1155	34.6	26.0	15.00	12.50
	Y*(8,L)C*C20	21.0	UC60C	1215	34.4	25.6	15.00	12.50
	Y*9C*C16	21.0	FC/MC/PC48C	1195	34.8	25.8	15.00	12.50
	Y*9C*C16	21.0	FC/PC60C	1235	35.0	26.0	14.50	12.00
	Y*9C*C20	21.0	FC/MC/PC48C	1315	35.2	27.2	14.50	12.00
	Y*9C*C20	21.0	FC/PC60C	1325	35.4	27.6	14.50	12.50
	Y*9C*D20	24.5	FC/MC/PC48D	1240	35.0	26.6	15.00	12.50
	Y*9C*D20	24.5	FC/MC/PC60D	1225	35.0	26.4	15.00	12.50
YZF04214(C)	T*(8,L)V*C16	21.0	FC/MC62D	1420	40.0	40.0	14.50	12.00
	T*(8,L)V*C16	21.0	FC/PC60C	1185	39.0	39.0	15.00	12.50
	T*(8,L)V*C16	21.0	UC60C	1195	39.0	39.0	15.00	12.50
	T*(8,L)V*C20	21.0	FC/MC62D	1365	39.5	39.5	14.50	12.00
	T*(8,L)V*C20	21.0	FC/PC60C	1215	39.5	39.5	15.00	12.50
	T*(8,L)V*C20	21.0	UC60C	1215	39.0	39.0	15.00	12.50
	T*9(C,V)*C16	21.0	FC/MC62D	1445	39.5	39.5	14.00	11.65
	T*9(C,V)*C16	21.0	FC/PC60C	1235	40.0	40.0	14.50	12.00
	T*9(C,V)*C16	21.0	UC60C	1235	39.0	39.0	14.50	12.10
	T*9(C,V)*C20	21.0	FC/MC62D	1445	40.0	40.0	14.00	11.65
	T*9(C,V)*C20	21.0	FC/PC60C	1330	40.5	40.5	14.50	12.00
	T*9(C,V)*C20	21.0	UC60C	1330	39.5	39.5	14.50	12.00
	T*9(C,V)*D20	24.5	FC/MC/PC60D	1225	39.5	39.5	15.00	12.50
	T*9(C,V)*D20	24.5	FC/MC62D	1455	40.0	40.0	14.50	12.00
	T*9(C,V)*D20	24.5	UC60D	1225	39.0	39.0	14.50	12.00
	Y*(8,L)C*C16	21.0	FC/MC62D	1420	40.0	40.0	14.50	12.00
	Y*(8,L)C*C16	21.0	FC/PC60C	1185	39.0	39.0	15.00	12.50
	Y*(8,L)C*C16	21.0	UC60C	1195	39.0	39.0	15.00	12.50
	Y*(8,L)C*C20	21.0	FC/MC62D	1365	39.5	39.5	14.50	12.00
	Y*(8,L)C*C20	21.0	FC/PC60C	1215	39.5	39.5	15.00	12.50
	Y*(8,L)C*C20	21.0	UC60C	1215	39.0	39.0	15.00	12.50
	Y*9C*C16	21.0	FC/MC62D	1445	39.5	39.5	14.00	11.65
	Y*9C*C16	21.0	FC/PC60C	1235	40.0	40.0	14.50	12.00
	Y*9C*C16	21.0	UC60C	1235	39.0	39.0	14.50	12.10
	Y*9C*C20	21.0	FC/MC62D	1445	40.0	40.0	14.00	11.65
	Y*9C*C20	21.0	FC/PC60C	1330	40.5	40.5	14.50	12.00
	Y*9C*C20	21.0	UC60C	1330	39.5	39.5	14.50	12.00
	Y*9C*D20	24.5	FC/MC/PC60D	1225	39.5	39.5	15.00	12.50
	Y*9C*D20	24.5	FC/MC62D	1455	40.0	40.0	14.50	12.00
	Y*9C*D20	24.5	UC60D	1225	39.0	39.0	14.50	12.00
YZF04813(C)	T*(8,L)V*C16	21.0	FC64D	1635	47.5	47.5	15.00	12.50
	T*(8,L)V*C20	21.0	FC64D	1630	47.5	47.5	15.00	12.50
	T*(8,L)X*C16	21.0	FC64D	1610	48.0	48.0	15.00	12.50
	T*(8,L)X*C20	21.0	FC/MC62D	1665	47.0	47.0	15.00	12.50
	T*(8,L)X*C20	21.0	FC64D	1665	48.0	48.0	15.00	12.50
	T*9(C,V)*C16	21.0	FC/MC62D	1590	46.5	35.6	14.50	12.00
	T*9(C,V)*C16	21.0	FC64D	1590	47.5	35.6	15.00	12.50
	T*9(C,V)*C20	21.0	FC/MC62D	1655	46.5	35.2	14.50	12.00
	T*9(C,V)*C20	21.0	FC64D	1655	47.5	35.6	14.00	12.00
	T*9(C,V)*D20	24.5	FC/MC62D	1630	47.5	35.6	14.50	12.00
	T*9(C,V)*D20	24.5	FC64D	1630	47.5	35.6	14.50	12.00
	T*9X*C16	21.0	FC64D	1550	47.5	35.6	15.00	12.50

For notes, see Page 9.

COOLING CAPACITY - With High Efficiency Motor Furnaces (Continued)

UNIT MODEL	FURNACE		COIL MODEL[1]	COOLING				
	MODEL	WIDTH		RATED CFM	NET MBH TOTAL	NET MBH SENS.	SEER	EER
16 SEER HP WITH HIGH EFFICIENCY MOTOR FURNACES[2]								
YZF04813(C)	T*9X*C20	21.0	FC/MC62D	1595	46.5	46.5	15.00	12.50
	T*9X*C20	21.0	FC64D	1595	48.0	35.6	15.00	12.50
	T*9X*D20	24.5	FC64D	1610	47.5	35.6	15.00	12.50
	Y*(8,L)C*C16	21.0	FC64D	1635	47.5	47.5	15.00	12.50
	Y*(8,L)C*C20	21.0	FC64D	1630	47.5	47.5	15.00	12.50
	Y*9C*C16	21.0	FC/MC62D	1590	46.5	35.2	14.50	12.00
	Y*9C*C16	21.0	FC64D	1590	47.5	35.6	15.00	12.50
	Y*9C*C20	21.0	FC/MC62D	1655	46.5	35.2	14.50	12.00
	Y*9C*C20	21.0	FC64D	1655	47.5	35.6	14.00	12.00
	Y*9C*D20	24.5	FC/MC62D	1630	47.5	35.6	14.50	12.00
	Y*9C*D20	24.5	FC64D	1630	47.5	35.6	14.50	12.00

1. MC coils available with a factory installed horizontal drain pan. See price pages for specific model number.
2. High Efficiency Motor Furnaces have B.O.D (Blower on Delay) standard.

PSC furnaces, such as the TG8S, TGLS, and TG9S, use Coil Only Ratings.

COOLING CAPACITY - With High Efficiency Motor Furnaces

UNIT MODEL	FURNACE		COIL MODEL[1]	COOLING					
	MODEL	WIDTH		STAGE	RATED CFM	NET MBH TOTAL	NET MBH SENS.	SEER	EER
16 SEER HP WITH HIGH EFFICIENCY FURNACES[2]									
YZF06013(C)	T*(8,L)V*C20	21.0	FC/MC62D	1	1060	46.5	29.8	15.00	11.60
				2	1620	55.5	39.0		
	T*(8,L)V*C20	21.0	FC64D	1	1060	48.0	31.2	15.00	11.85
				2	1630	57.0	40.0		
	T*(8,L)X*C20	21.0	FC64D	1	835	45.0	28.0	15.00	12.00
				2	1665	57.5	40.5		
	T*9(C,V)*C20	21.0	FC/MC62D	1	1040	46.5	29.8	15.00	11.25
				2	1655	55.0	38.5		
	T*9(C,V)*C20	21.0	FC64D	1	1040	48.0	31.2	15.00	11.50
				2	1655	56.5	40.0		
	T*9(C,V)*D20	24.5	FC/MC62D	1	1085	46.5	29.8	15.00	11.35
				2	1630	55.5	38.5		
	T*9(C,V)*D20	24.5	FC64D	1	1085	48.0	31.2	15.00	11.65
				2	1630	57.0	40.0		
	T*9X*C20	21.0	FC/MC62D	1	1220	47.5	31.2	15.00	11.70
				2	1595	55.5	38.5		
	T*9X*C20	21.0	FC64D	1	1220	49.5	32.6	15.00	12.00
				2	1595	57.0	40.0		
	T*9X*D20	24.5	FC/MC62D	1	1240	48.0	31.4	15.00	11.50
				2	1610	55.0	38.5		
	T*9X*D20	24.5	FC64D	1	1240	49.5	32.8	15.00	11.85
				2	1610	57.0	40.0		
	Y*(8,L)C*C20	21.0	FC/MC62D	1	1060	46.5	29.8	15.00	11.60
				2	1620	55.5	39.0		
	Y*(8,L)C*C20	21.0	FC64D	1	1060	48.0	31.2	15.00	11.85
				2	1630	57.0	40.0		
	Y*9C*C20	21.0	FC/MC62D	1	1040	46.5	29.8	15.00	11.25
				2	1655	55.0	38.5		
	Y*9C*C20	21.0	FC64D	1	1040	48.0	31.2	15.00	11.50
				2	1655	56.5	40.0		
	Y*9C*D20	24.5	FC/MC62D	1	1085	46.5	29.8	15.00	11.35
				2	1630	55.5	38.5		
	Y*9C*D20	24.5	FC64D	1	1085	48.0	31.2	15.00	11.65
				2	1630	57.0	40.0		

1. MC coils available with a factory installed horizontal drain pan. See price pages for specific model number.
2. High Efficiency Motor Furnaces have B.O.D (Blower on Delay) standard.

PSC furnaces, such as the TG8S, TGLS, and TG9S, use Coil Only Ratings.

HEATING CAPACITY - With Air Handler Coils

UNIT MODEL	AIR HANDLER MODEL	COIL[1] MODEL	HEATING[2]							
			RATED CFM	47°F			17°F			HSPF
				MBH	COP	KW	MBH	COP	KW	STD
16 SEER HP WITH AIR HANDLERS										
YZF02413(C)	AHE24B	–	795	23.8	3.88	1.80	15.1	2.56	1.73	8.50
			515*	23.4	3.63	1.92	15.1	2.56	1.73	8.40
	AHE30B	–	795	23.8	3.88	1.80	15.1	2.56	1.73	8.50
			515*	23.4	3.63	1.92	15.1	2.56	1.73	8.40
	AHR24B	–	740	24.2	3.64	1.95	15.1	2.40	1.84	7.85
	AHV24B	–	710	24.0	3.70	1.90	15.2	2.44	1.83	9.00
			470*	23.8	3.54	1.97	14.6	2.38	1.80	8.50
	AHV30B	–	775	24.0	3.78	1.86	15.3	2.50	1.79	9.00
			500*	24.0	3.74	1.88	14.8	2.52	1.72	8.50
	AHV36C	–	760	24.0	4.08	1.72	15.3	2.70	1.66	9.00
			485*	24.0	3.80	1.85	14.8	2.56	1.69	8.50
	AV*36	–	725	23.8	3.92	1.78	14.8	2.66	1.63	9.00
			630*	23.8	3.74	1.86	14.6	2.52	1.70	8.85
	MV12B	FC/MC35B	800	24.0	3.82	1.84	15.0	2.54	1.73	8.50
			600*	23.8	3.54	1.97	14.6	2.38	1.80	8.50
	MV12B	FC/MC43B	800	24.0	4.02	1.76	14.9	2.70	1.62	9.00
			600*	23.8	3.62	1.93	14.6	2.44	1.75	8.55
	MX12B	FC/MC35B	815	23.8	3.92	1.78	14.8	2.60	1.67	9.00
			660*	23.8	3.70	1.88	14.5	2.48	1.71	8.95
	MX12B	FC/MC43B	735	23.8	3.90	1.79	14.8	2.64	1.64	9.00
			620*	23.8	3.68	1.89	14.5	2.48	1.71	8.90
YZF03013(C)	AHE36C	–	1000	29.4	4.02	2.14	19.0	2.78	2.00	9.00
			600*	29.1	3.73	2.28	19.0	2.78	2.00	8.80
	AHR36B	–	1060	30.0	4.00	2.17	19.9	2.78	2.00	9.15
	AHV36C	–	895	29.6	3.88	2.24	19.1	2.72	2.06	9.00
			640*	28.8	3.68	2.29	18.8	2.54	2.17	9.00
	AV*36	–	960	29.4	4.02	2.14	18.9	2.80	1.98	9.00
			725*	28.9	3.75	2.26	18.9	2.80	1.98	9.00
	MV12B	FC/MC43B	1000	29.6	3.88	2.24	19.1	2.72	2.06	9.00
			800*	29.0	3.72	2.28	18.8	2.54	2.17	9.00
	MV16C	FC/MC43C	1000	29.6	3.96	2.19	19.0	2.76	2.02	9.00
	MX12B	FC/MC43B	1095	29.8	4.04	2.16	19.1	2.78	2.01	9.00
			620*	29.1	3.73	2.28	19.0	2.78	2.00	8.80
	MX16C	FC/MC43C	970	28.8	3.76	2.24	18.8	2.66	2.07	9.00
YZF03613(C)	AHE42D	–	1180	35.6	3.98	2.62	23.2	2.78	2.45	9.00
			685*	35.0	3.40	3.29	23.2	2.80	2.43	8.80
	AHE48D	–	1195	35.0	3.90	2.62	23.2	2.76	2.45	9.00
	AHR42C	–	1230	37.0	3.78	2.87	24.0	2.64	2.66	7.85
	AHV42D	–	1180	36.0	3.68	2.87	23.6	2.50	2.77	9.00
			790*	35.8	3.66	2.87	22.8	2.72	2.46	8.50
	AHV48D	–	1155	36.0	3.62	2.91	23.6	2.44	2.83	9.00
			835*	35.6	3.64	2.87	22.6	2.66	2.49	8.50
	AV*48	–	1220	36.0	4.20	2.55	23.2	2.92	2.33	9.00
			960*	36.0	3.40	3.19	23.2	2.92	2.33	9.00
	MV12D	FC/MC48D	1160	36.0	3.98	2.65	23.2	2.80	2.43	9.00
			1000*	36.0	3.40	3.29	23.2	2.80	2.43	9.00
	MV12D	FC/MC60D	1135	36.0	4.10	2.60	23.2	2.86	2.38	9.00
			1000*	36.0	3.40	3.24	23.2	2.86	2.38	9.00
	MV16C	FC/MC48C	1200	36.0	3.92	2.71	23.4	2.76	2.48	9.00
			1000*	36.0	3.40	3.35	23.4	2.76	2.48	9.00

For notes, see Page 11.

HEATING CAPACITY - With Air Handler Coils (Continued)

UNIT MODEL	AIR HANDLER MODEL	COIL[1] MODEL	HEATING[2]							
			RATED CFM	47°F			17°F			HSPF
				MBH	COP	KW	MBH	COP	KW	STD
16 SEER HP WITH AIR HANDLERS										
YZF03613(C)	MX12D	FC/MC48D	1225	35.6	3.96	2.63	23.2	2.80	2.43	9.00
			850*	35.0	3.40	3.29	23.2	2.80	2.43	8.80
	MX12D	FC/MC60D	1275	35.6	4.20	2.48	23.2	2.88	2.36	9.00
			850*	35.0	3.40	3.29	23.2	2.80	2.43	8.80
	MX16C	FC/MC48C	1150	35.8	3.96	2.65	23.0	2.80	2.41	9.00
			995*	35.6	3.62	2.88	22.8	2.70	2.47	8.95
YZF04214(C)	AHE48D	–	1200	40.5	3.88	3.05	25.6	2.68	2.79	8.50
			1000*	39.5	3.98	2.91	25.8	2.86	2.64	9.20
	AHE60D	–	1385	40.0	4.12	2.84	25.4	2.76	2.69	9.00
			1150*	39.5	3.98	2.91	25.4	2.76	2.70	8.98
	AHR60D	–	1350	41.0	3.94	3.04	26.2	2.66	2.88	7.80
	AHV48D	–	1155	40.5	3.84	3.09	25.6	2.66	2.81	8.50
			875*	39.5	3.90	2.97	26.0	2.74	2.78	9.00
	AHV60D	–	1340	40.0	4.04	2.90	25.6	2.74	2.73	8.50
			955*	39.5	3.98	2.91	25.4	2.76	2.70	9.00
	AV*48	–	1220	41.0	4.12	2.91	25.6	2.82	2.65	9.00
	MV16C	FC60C	1200	41.0	4.08	2.94	25.6	2.80	2.67	8.50
			1000*	40.0	3.84	3.05	25.4	2.74	2.72	8.98
	MV20D	FC/MC60D	1300	41.0	4.16	2.88	25.6	2.84	2.64	8.50
	MV20D	FC/MC62D	1400	40.5	4.10	2.89	25.6	2.76	2.71	8.50
			1300*	40.0	4.12	2.84	25.4	2.70	2.76	8.98
	MX16C	FC60C	1150	40.5	4.12	2.88	25.4	2.82	2.63	9.00
			995*	40.0	3.90	3.01	25.2	2.76	2.68	8.98
	MX20D	FC/MC60D	1295	41.0	4.24	2.83	25.4	2.88	2.58	9.00
	MX20D	FC/MC62D	1470	40.0	4.24	2.76	25.4	2.84	2.62	9.00
			1260*	39.5	4.12	2.81	25.4	2.72	2.74	8.98
YZF04813(C)	AHE60D	–	1565	47.0	3.80	3.62	33.4	2.70	3.62	9.00
			1160*	46.8	3.33	4.30	33.4	2.72	3.60	8.80
	AHR60D	–	1620	48.0	3.64	3.86	34.2	2.60	3.85	9.45
	AHV60D	–	1570	48.0	3.74	3.76	33.8	2.66	3.72	9.00
			1000*	48.0	3.34	4.21	32.0	2.52	3.72	8.50
	MV20D	FC/MC62D	1630	48.0	3.78	3.72	33.6	2.70	3.64	9.00
			1000*	48.0	3.29	4.38	33.6	2.70	3.65	9.00
	MV20D	FC64D	1630	48.0	3.94	3.56	34.0	2.78	3.58	9.00
			1000*	48.0	3.45	4.26	34.0	2.78	3.58	9.00
	MX20D	FC/MC62D	1605	47.0	3.86	3.56	33.2	2.76	3.52	9.00
			1260*	46.9	3.56	4.03	32.4	2.62	3.62	8.80
	MX20D	FC64D	1605	47.0	3.98	3.46	33.6	2.82	3.49	9.00
			1260*	46.9	3.66	3.92	32.6	2.72	3.51	8.85

1. Rated CFM same as for cooling.
2. Heating MBH based on AHRI standards of 70 °F DB (Dry Bulb) entering indoor air, 72% RH (Relative Humidity) outdoor air with 25 feet of interconnecting piping and no supplemental electric heat operation.

* Notates “Hot Heat Pump” performance. These ratings are not AHRI Listed.

COP equals MBH output divided by (total KW input x 3.412).

HSPF (Heating Seasonal Performance Factor) is the total heating output during a normal annual usage period for heating divided by the total electric power input during the same period.

— = Not Applicable.

MA Modular Air Handlers use Coil Only Ratings.

HEATING CAPACITY - With Air Handler Coils

UNIT MODEL	AIR HANDLER MODEL	COIL[1] MODEL	HEATING[2]					
			STAGE	RATED CFM	NET MBH		HSPF	COP @ 47
					47 OD	17 OD		
16 SEER HP WITH AIR HANDLERS								
YZF06013(C)	AHE60D	–	1	1160	42.5	–	–	3.46
			2	1835	58.0	39.0	9.00	3.80
			2	1160*	57.0	38.5	8.60	3.28
	AHV60D	–	1	1090	41.5	-	-	3.30
			2	1635	59.5	38.0	8.95	3.60
			2	1090*	57.5	37.0	8.70	3.46
	MV20D	FC/MC62D	1	1075	41.5	–	–	3.42
			2	1630	58.0	38.0	9.00	3.72
			2	1075*	57.5	38.5	9.00	3.24
	MV20D	FC64D	1	1075	42.0	–	–	3.52
			2	1630	58.0	38.0	9.00	3.82
			2	1075*	58.0	38.5	9.00	3.32
	MX20D	FC/MC62D	1	1390	43.0	–	–	3.62
			2	1795	58.0	38.5	9.00	3.80
			2	1390*	57.0	38.5	8.60	3.52
	MX20D	FC64D	1	1390	44.0	–	–	3.72
			2	1795	58.0	39.0	9.00	3.94
			2	1390*	57.0	39.0	8.60	3.62

1. Rated CFM same as for cooling.
2. Heating MBH based on AHRI standards of 70 °F DB (Dry Bulb) entering indoor air, 72% RH (Relative Humidity) outdoor air with 25 feet of interconnecting piping and no supplemental electric heat operation.

* Notates “Hot Heat Pump” performance. These ratings are not AHRI Listed.

COP equals MBH output divided by (total KW input x 3.412).

HSPF (Heating Seasonal Performance Factor) is the total heating output during a normal annual usage period for heating divided by the total electric power input during the same period.

— = Not Applicable.

MA Modular Air Handlers use Coil Only Ratings.

HEATING CAPACITY - With Upflow, Downflow, & Horizontal Furnaces and Coils (Coil Only Ratings)

UNIT MODEL	COIL[1] MODEL	HEATING[2]						
		47°F			17°F			HSPF
		MBH	COP	KW	MBH	COP	KW	STD
16 SEER HP COIL ONLY RATINGS								
YZF02413(C)	FC/MC/PC32	23.6	3.56	1.94	15.6	2.38	1.92	7.80
	FC/MC/PC35	23.6	3.56	1.94	15.6	2.38	1.92	7.80
	FC/MC/PC37	23.6	3.70	1.87	15.5	2.50	1.82	7.80
	FC/MC/PC43	23.6	3.70	1.87	15.5	2.50	1.82	7.80
YZF03013(C)	FC/MC/PC37	29.6	3.74	2.32	19.7	2.62	2.20	8.20
	FC/MC/PC43	29.6	3.74	2.32	19.7	2.62	2.20	8.20
YZF03613(C)	FC/MC/PC48	35.6	3.70	2.82	24.0	2.62	2.68	7.80
	FC/MC/PC60	35.6	3.86	2.70	23.8	2.72	2.56	7.80
	UC48	36.0	3.86	2.82	24.0	2.68	2.62	7.80
	UC60	36.0	3.84	2.84	23.4	2.60	2.64	7.80
YZF04214(C)	FC/MC/PC60	41.0	3.62	3.31	26.4	2.52	3.06	7.80
	FC/MC62	41.0	3.70	3.24	26.4	2.62	2.95	7.80
	UC60	41.5	3.80	3.19	26.0	2.60	2.92	7.80
YZF04813(C)	FC/MC62	47.0	3.64	3.78	34.2	2.60	3.85	7.80
	FC64	47.0	3.76	3.66	34.8	2.66	3.83	7.80

1. Rated CFM same as for cooling.
2. Heating MBH based on ARI standards of 70 °F DB (Dry Bulb) entering indoor air, 72% RH (Relative Humidity) outdoor air with 25 feet of interconnecting piping and no supplemental electric heat operation.

COP equals MBH output divided by (total KW input x 3.412).

HSPF (Heating Seasonal Performance Factor) is the total heating output during a normal annual usage period for heating divided by the total electric power input during the same period.

— = Not Applicable.

MA Modular Air Handlers use Coil Only Ratings.

PSC furnaces, such as the TG8S, TGLS, and TG9S, use Coil Only Ratings.

HEATING CAPACITY - With Upflow, Downflow, & Horizontal Furnaces and Coils (Coil Only Ratings)

UNIT MODEL	COIL[1] MODEL	HEATING[2]					
		STAGE	RATED CFM	NET MBH		HSPF	COP @ 47
				47 OD	17 OD		
16 SEER HP COIL ONLY RATINGS							
YZF06013(C)	FC/MC62	1	1350	43.5	–	–	3.42
		2	1800	58.0	39.0	9.00	3.66
		2	1350*	57.0	38.5	8.60	3.36
	FC64	1	1350	44.0	–	–	3.52
		2	1800	58.0	39.0	9.00	3.76
		2	1350*	57.0	38.5	8.60	3.44

1. Rated CFM same as for cooling.
2. Heating MBH based on AHRI standards of 70° DB (Dry Bulb) entering indoor air, 72% RH (Relative Humidity) outdoor air with 25 feet of interconnecting piping and no supplemental electric heat operation.

* Notates “Hot Heat Pump” performance. These ratings are not AHRI Listed.

COP equals MBH output divided by (total KW input x 3.412).

HSPF (Heating Seasonal Performance Factor) is the total heating output during a normal annual usage period for heating divided by the total electric power input during the same period.

— = Not Applicable.

MA Modular Air Handlers use coil only ratings.

PSC furnaces, such as the TG8S, TGLS, and TG9S, use Coil Only Ratings.

HEATING CAPACITY - With High Efficiency Motor Furnaces

UNIT MODEL	FURNACE MODEL	COIL[1] MODEL	HEATING[2]							
			RATED CFM	47°F			17°F			HSPF
				MBH	COP	KW	MBH	COP	KW	STD
16 SEER HP WITH HIGH EFFICIENCY MOTOR FURNACES[3]										
YZF02413(C)	T*(8,L)V*A12	FC/MC/PC32A	755	24.0	3.76	1.87	15.1	2.52	1.76	8.50
			590*	23.8	3.51	1.96	15.1	2.52	1.76	8.50
	T*(8,L)V*A12	FC/MC/PC37A	765	24.0	3.90	1.80	15.0	2.62	1.68	8.50
			585*	23.8	3.65	1.89	15.0	2.62	1.68	8.50
	T*(8,L)V*B12	FC/MC/PC35B	785	24.0	3.80	1.85	15.1	2.52	1.76	8.50
			515*	23.8	3.55	1.94	15.1	2.52	1.76	8.50
	T*(8,L)V*B12	FC/MC/PC43B	790	24.0	3.92	1.79	15.0	2.64	1.66	9.00
			515*	23.8	3.67	1.88	15.0	2.64	1.66	9.00
	T*(8,L)V*C16	FC/MC/PC35C	775	23.8	3.80	1.84	15.0	2.54	1.73	8.50
	T*(8,L)V*C16	FC/MC/PC43C	770	24.0	3.92	1.79	14.9	2.64	1.65	9.00
			645*	23.8	3.67	1.88	14.9	2.64	1.65	9.00
	T*(8,L)V*C20	FC/MC/PC35C	755	23.8	3.78	1.84	15.0	2.52	1.74	8.50
	T*(8,L)V*C20	FC/MC/PC43C	740	23.8	3.88	1.80	14.9	2.62	1.67	9.00
	T*(8,L)X*A12	FC/MC/PC32A	800	23.8	3.92	1.78	14.9	2.60	1.68	8.50
			530*	23.3	3.67	1.87	14.9	2.60	1.68	8.50
	T*(8,L)X*A12	FC/MC/PC37A	840	24.0	4.08	1.72	14.8	2.74	1.58	9.00
			640*	23.8	3.83	1.81	14.8	2.74	1.58	9.00
	T*(8,L)X*B12	FC/MC/PC35B	850	24.0	3.98	1.77	14.9	2.62	1.67	8.50
			675*	23.8	3.73	1.86	14.9	2.62	1.67	8.50
	T*(8,L)X*B12	FC/MC/PC43B	865	24.0	4.10	1.72	14.8	2.74	1.58	9.00
			700*	23.8	3.85	1.81	14.8	2.74	1.58	9.00
	T*(8,L)X*C16	FC/MC/PC35C	865	24.0	3.98	1.77	14.9	2.62	1.67	8.50
			625*	23.8	3.73	1.86	14.9	2.62	1.67	8.50
	T*(8,L)X*C16	FC/MC/PC43C	855	24.0	4.10	1.72	14.8	2.74	1.58	9.00
			655*	23.8	3.85	1.81	14.8	2.74	1.58	9.00
	T*(8,L)X*C20	FC/MC/PC35C	885	24.0	3.92	1.79	15.0	2.60	1.69	8.50
	T*(8,L)X*C20	FC/MC/PC43C	815	24.0	4.06	1.73	14.9	2.72	1.61	9.00
	T*9(C,V)*B12	FC/MC/PC35B	815	24.0	3.86	1.84	15.1	2.56	1.73	8.50
			550*	23.8	3.61	1.93	15.1	2.56	1.73	8.50
	T*9(C,V)*B12	FC/MC/PC43B	800	24.0	3.98	1.78	15.0	2.66	1.65	8.50
			550*	23.8	3.73	1.87	15.0	2.66	1.65	8.50
	T*9(C,V)*C16	FC/MC/PC35C	900	24.0	3.92	1.81	15.1	2.56	1.73	8.50
			645*	23.8	3.67	1.90	15.1	2.56	1.73	8.50
	T*9(C,V)*C16	FC/MC/PC43C	810	24.0	4.02	1.76	14.9	2.68	1.63	9.00
	T*9(C,V)*C20	FC/MC/PC35C	755	23.8	3.78	1.84	15.0	2.52	1.74	8.50

For notes, see Page 18.

HEATING CAPACITY - With High Efficiency Motor Furnaces (Continued)

UNIT MODEL	FURNACE MODEL	COIL[1] MODEL	HEATING[2]							
			RATED CFM	47°F			17°F			HSPF
				MBH	COP	KW	MBH	COP	KW	STD
16 SEER HP WITH HIGH EFFICIENCY MOTOR FURNACES[3]										
YZF02413(C)	T*9(C,V)*C20	FC/MC/PC43C	890	24.0	4.04	1.77	15.0	2.66	1.65	9.00
	T*9V*A10	FC/MC/PC32A	785	24.0	3.72	1.91	15.2	2.46	1.81	8.20
			580*	23.8	3.52	1.98	14.6	2.36	1.81	8.15
	T*9V*A10	FC/MC/PC37A	790	24.0	3.82	1.87	15.3	2.52	1.78	8.20
			570*	23.8	3.52	1.98	14.6	2.38	1.80	8.15
	T*9X*A10	FC/MC/PC32A	745	24.0	3.72	1.89	15.1	2.46	1.80	8.40
			585*	23.8	3.52	1.98	14.6	2.38	1.80	8.35
	T*9X*A10	FC/MC/PC37A	740	24.0	3.80	1.87	15.1	2.52	1.76	8.45
			580*	23.8	3.62	1.93	14.6	2.42	1.77	8.40
	T*9X*B12	FC/MC/PC35B	785	23.8	3.84	1.82	15.0	2.56	1.72	8.50
			620*	23.6	3.59	1.91	15.0	2.56	1.72	8.45
	T*9X*B12	FC/MC/PC43B	800	24.0	4.02	1.75	15.0	2.66	1.65	9.00
			645*	23.6	3.59	1.91	15.0	2.56	1.72	8.80
	T*9X*C16	FC/MC/PC35C	765	23.8	3.80	1.84	15.0	2.54	1.73	8.50
			610*	23.3	3.55	1.93	15.0	2.54	1.73	8.50
	T*9X*C16	FC/MC/PC43C	785	24.0	4.02	1.75	15.0	2.66	1.65	9.00
	T*9X*C20	FC/MC/PC35C	825	24.0	3.94	1.78	15.0	2.60	1.69	8.50
	T*9X*C20	FC/MC/PC43C	790	24.0	4.00	1.76	15.1	2.64	1.68	9.00
	Y*(8,L)C*A12	FC/MC/PC32A	755	24.0	3.76	1.87	15.1	2.52	1.76	8.50
			590*	23.8	3.51	1.96	15.1	2.52	1.76	8.50
	Y*(8,L)C*A12	FC/MC/PC37A	765	24.0	3.90	1.80	15.0	2.62	1.68	8.50
			585*	23.8	3.65	1.89	15.0	2.62	1.68	8.50
	Y*(8,L)C*B12	FC/MC/PC35B	785	24.0	3.80	1.85	15.1	2.52	1.76	8.50
			515*	23.8	3.55	1.94	15.1	2.52	1.76	8.50
	Y*(8,L)C*B12	FC/MC/PC43B	790	24.0	3.92	1.79	15.0	2.64	1.66	9.00
			515*	23.8	3.67	1.88	15.0	2.64	1.66	9.00
	Y*(8,L)C*C16	FC/MC/PC35C	775	23.8	3.80	1.84	15.0	2.54	1.73	8.50
	Y*(8,L)C*C16	FC/MC/PC43C	770	24.0	3.92	1.79	14.9	2.64	1.65	9.00
			645*	23.8	3.67	1.88	14.9	2.64	1.65	9.00
	Y*(8,L)C*C20	FC/MC/PC35C	755	23.8	3.78	1.84	15.0	2.52	1.74	8.50
	Y*(8,L)C*C20	FC/MC/PC43C	740	23.8	3.88	1.80	14.9	2.62	1.67	9.00
	Y*9C*B12	FC/MC/PC35B	815	24.0	3.86	1.84	15.1	2.56	1.73	8.50
			550*	23.8	3.61	1.93	15.1	2.56	1.73	8.50
	Y*9C*B12	FC/MC/PC43B	800	24.0	3.98	1.78	15.0	2.66	1.65	8.50
			550*	23.8	3.73	1.87	15.0	2.66	1.65	8.50
	Y*9C*C16	FC/MC/PC35C	900	24.0	3.92	1.81	15.1	2.56	1.73	8.50
			645*	23.8	3.67	1.90	15.1	2.56	1.73	8.50
	Y*9C*C16	FC/MC/PC43C	810	24.0	4.02	1.76	14.9	2.68	1.63	9.00
	Y*9C*C20	FC/MC/PC35C	755	23.8	3.78	1.84	15.0	2.52	1.74	8.50
	Y*9C*C20	FC/MC/PC43C	890	24.0	4.04	1.77	15.0	2.66	1.65	9.00
YZF03013(C)	T*(8,L)V*A12	FC/MC/PC37A	950	29.6	3.86	2.25	19.2	2.70	2.08	9.00
			630*	29.1	3.59	2.36	19.2	2.70	2.08	9.00
	T*(8,L)V*B12	FC/MC/PC43B	1045	29.8	3.92	2.23	19.2	2.74	2.05	9.00
			715*	29.3	3.65	2.34	19.2	2.74	2.05	9.00
	T*(8,L)V*C16	FC/MC/PC43C	1035	29.6	4.00	2.17	19.0	2.78	2.00	9.00
			695*	29.1	3.73	2.28	19.0	2.78	2.00	9.00
	T*(8,L)V*C20	FC/MC/PC43C	1025	29.4	4.04	2.13	18.9	2.80	1.98	9.00
			690*	28.9	3.77	2.25	18.9	2.80	1.98	9.00
	T*(8,L)X*A12	FC/MC/PC37A	1090	30.0	4.06	2.17	19.2	2.80	2.01	9.00
			605*	29.5	3.79	2.28	19.2	2.80	2.01	9.00
	T*(8,L)X*B12	FC/MC/PC43B	1090	30.0	4.06	2.17	19.2	2.80	2.01	9.00
			660*	29.5	3.79	2.28	19.2	2.80	2.01	9.00
	T*(8,L)X*C16	FC/MC/PC43C	955	29.4	3.96	2.18	18.9	2.78	1.99	9.00
			710*	28.9	3.69	2.29	18.9	2.78	1.99	9.00
	T*(8,L)X*C20	FC/MC/PC43C	870	29.0	3.86	2.20	18.8	2.76	2.00	9.00
			780*	28.5	3.59	2.31	18.8	2.76	2.00	9.00

For notes, see Page 18.

HEATING CAPACITY - With High Efficiency Motor Furnaces (Continued)

UNIT MODEL	FURNACE MODEL	COIL[1] MODEL	HEATING[2]							
			RATED CFM	47°F			17°F			HSPF
				MBH	COP	KW	MBH	COP	KW	STD
16 SEER HP WITH HIGH EFFICIENCY MOTOR FURNACES[3]										
YZF03013(C)	T*9(C,V)*B12	FC/MC/PC43B	1035	30.0	3.88	2.27	19.3	2.70	2.09	9.00
			670*	29.5	3.61	2.38	19.3	2.70	2.09	9.00
	T*9(C,V)*C16	FC/MC/PC43C	1030	29.8	3.92	2.23	19.2	2.74	2.05	9.00
			680*	29.3	3.65	2.34	19.2	2.74	2.05	9.00
	T*9(C,V)*C20	FC/MC/PC43C	995	29.6	3.94	2.20	19.1	2.74	2.04	9.00
			675*	29.1	3.67	2.31	19.1	2.74	2.04	9.00
	T*9X*A10	FC/MC/PC37A	1025	29.8	3.74	2.33	19.5	2.62	2.18	8.20
			740*	29.3	3.42	2.51	19.4	2.45	2.32	8.00
	T*9X*C16	FC/MC/PC43C	1055	29.8	4.10	2.13	19.1	2.82	1.98	9.00
			695*	29.3	3.83	2.24	19.1	2.82	1.98	9.00
	Y*(8,L)C*A12	FC/MC/PC37A	950	29.6	3.86	2.25	19.2	2.70	2.08	9.00
			630*	29.1	3.59	2.36	19.2	2.70	2.08	9.00
	Y*(8,L)C*B12	FC/MC/PC43B	1045	29.8	3.92	2.23	19.2	2.74	2.05	9.00
			715*	29.3	3.65	2.34	19.2	2.74	2.05	9.00
	Y*(8,L)C*C16	FC/MC/PC43C	1035	29.6	4.00	2.17	19.0	2.78	2.00	9.00
			695*	29.1	3.73	2.28	19.0	2.78	2.00	9.00
	Y*(8,L)C*C20	FC/MC/PC43C	1025	29.4	4.04	2.13	18.9	2.80	1.98	9.00
			690*	28.9	3.77	2.25	18.9	2.80	1.98	9.00
	Y*9C*B12	FC/MC/PC43B	1035	30.0	3.88	2.27	19.3	2.70	2.09	9.00
			670*	29.5	3.61	2.38	19.3	2.70	2.09	9.00
	Y*9C*C16	FC/MC/PC43C	1030	29.8	3.92	2.23	19.2	2.74	2.05	9.00
			680*	29.3	3.65	2.34	19.2	2.74	2.05	9.00
	Y*9C*C20	FC/MC/PC43C	995	29.6	3.94	2.20	19.1	2.74	2.04	9.00
			675*	29.1	3.67	2.31	19.1	2.74	2.04	9.00
YZF03613(C)	T*(8,L)V*C16	FC/MC/PC48C	1195	36.0	3.90	2.72	23.4	2.74	2.50	9.00
			1000*	36.0	3.30	3.36	23.4	2.74	2.50	9.00
	T*(8,L)V*C16	FC/PC60C	1185	36.0	4.12	2.59	23.2	2.88	2.36	9.00
			1000*	36.0	3.52	3.23	23.2	2.88	2.36	9.00
	T*(8,L)V*C16	UC48C	1210	36.0	4.06	2.63	23.4	2.84	2.41	9.00
			1000*	36.0	3.46	3.27	23.4	2.84	2.41	9.00
	T*(8,L)V*C16	UC60C	1195	36.0	4.08	2.61	23.0	2.82	2.39	9.00
			1000*	36.0	3.48	3.25	23.0	2.82	2.39	9.00
	T*(8,L)V*C20	FC/MC/PC48C	1150	36.0	3.92	2.71	23.4	2.76	2.48	9.00
			1000*	36.0	3.32	3.35	23.4	2.76	2.48	9.00
	T*(8,L)V*C20	FC/PC60C	1215	36.0	4.14	2.59	23.2	2.88	2.36	9.00
			1000*	36.0	3.54	3.23	23.2	2.88	2.36	9.00
	T*(8,L)V*C20	UC48C	1155	36.0	4.10	2.60	23.2	2.86	2.38	9.00
			1000*	36.0	3.50	3.24	23.2	2.86	2.38	9.00
	T*(8,L)V*C20	UC60C	1215	36.0	4.06	2.63	23.0	2.82	2.39	9.00
			1000*	36.0	3.46	3.27	23.0	2.82	2.39	9.00
	T*(8,L)X*C16	FC/MC/PC48C	1185	36.0	3.98	2.65	23.2	2.80	2.43	9.00
			1000*	36.0	3.38	3.29	23.2	2.80	2.43	9.00
	T*(8,L)X*C16	FC/PC60C	1190	36.0	4.16	2.55	23.0	2.92	2.31	9.00
			1000*	36.0	3.56	3.19	23.0	2.92	2.31	9.00
	T*(8,L)X*C16	UC48C	1185	36.0	4.16	2.55	23.0	2.90	2.32	9.00
			1000*	36.0	3.56	3.19	23.0	2.90	2.32	9.00
	T*(8,L)X*C16	UC60C	1190	36.0	4.16	2.55	22.8	2.86	2.34	9.00
			1000*	36.0	3.56	3.19	22.8	2.86	2.34	9.00
	T*(8,L)X*C20	FC/MC/PC48C	1270	36.0	4.04	2.63	23.4	2.82	2.43	9.00
			1000*	36.0	3.44	3.27	23.4	2.82	2.43	9.00
	T*(8,L)X*C20	FC/PC60C	1275	36.6	4.22	2.54	23.2	2.92	2.33	9.00
			1000*	36.0	3.62	3.18	23.2	2.92	2.33	9.00
	T*(8,L)X*C20	UC48C	1270	36.0	4.16	2.56	23.2	2.90	2.34	9.00
			1000*	36.0	3.56	3.20	23.2	2.90	2.34	9.00
	T*(8,L)X*C20	UC60C	1275	36.0	4.16	2.56	23.0	2.86	2.36	9.00
			1000*	36.0	3.56	3.20	23.0	2.86	2.36	9.00

For notes, see Page 18.

HEATING CAPACITY - With High Efficiency Motor Furnaces (Continued)

UNIT MODEL	FURNACE MODEL	COIL[1] MODEL	HEATING[2]							
			RATED CFM	47°F			17°F			HSPF
				MBH	COP	KW	MBH	COP	KW	STD
16 SEER HP WITH HIGH EFFICIENCY MOTOR FURNACES[3]										
YZF03613(C)	T*9(C,V)*C16	FC/MC/PC48C	1195	36.0	3.90	2.70	23.6	2.72	2.54	9.00
			990*	35.8	3.54	2.96	23.0	2.66	2.53	8.60
	T*9(C,V)*C16	FC/PC60C	1235	36.0	4.02	2.62	23.6	2.78	2.49	8.50
			1020*	35.8	3.72	2.84	22.8	2.74	2.44	8.30
	T*9(C,V)*C20	FC/MC/PC48C	1315	36.0	3.94	2.68	23.8	2.72	2.56	8.50
			965*	35.8	3.56	2.95	23.0	2.66	2.53	8.30
	T*9(C,V)*C20	FC/PC60C	1325	36.0	4.10	2.57	23.6	2.80	2.47	8.50
			980*	35.8	3.76	2.81	22.8	2.78	2.40	8.30
	T*9(C,V)*D20	FC/MC/PC48D	1240	36.0	3.96	2.69	23.4	2.76	2.48	9.00
			1000*	36.0	3.36	3.33	23.4	2.76	2.48	9.00
	T*9(C,V)*D20	FC/MC/PC60D	1225	36.0	4.12	2.62	23.4	2.86	2.40	9.00
			1000*	36.0	3.52	3.26	23.4	2.86	2.40	9.00
	T*9X*C16	FC/MC/PC48C	1280	36.0	3.98	2.68	23.4	2.78	2.47	9.00
			1000*	36.0	3.38	3.32	23.4	2.78	2.47	9.00
	T*9X*C16	FC/PC60C	1315	36.0	4.20	2.57	23.2	2.86	2.38	9.00
			1000*	36.0	3.60	3.21	23.2	2.86	2.38	9.00
	T*9X*C16	UC48C	1280	36.0	4.10	2.62	23.4	2.86	2.40	9.00
			1000*	36.0	3.50	3.26	23.4	2.86	2.40	9.00
	T*9X*C16	UC60C	1300	36.0	4.14	2.59	23.0	2.84	2.37	9.00
			1000*	36.0	3.54	3.23	23.0	2.84	2.37	9.00
	T*9X*C20	FC/MC/PC48C	1205	36.0	3.92	2.71	23.4	2.74	2.50	9.00
			1000*	36.0	3.32	3.35	23.4	2.74	2.50	9.00
	T*9X*C20	FC/PC60C	1240	36.0	4.18	2.57	23.2	2.90	2.34	9.00
			1000*	36.0	3.58	3.21	23.2	2.90	2.34	9.00
	T*9X*C20	UC48C	1205	36.0	4.08	2.61	23.2	2.86	2.38	9.00
			1000*	36.0	3.48	3.25	23.2	2.86	2.38	9.00
	T*9X*C20	UC60C	1240	36.0	4.08	2.61	23.0	2.82	2.39	9.00
			1000*	36.0	3.48	3.25	23.0	2.82	2.39	9.00
	T*9X*D20	FC/MC/PC48D	1240	36.0	4.02	2.65	23.4	2.80	2.45	9.00
			1000*	36.0	3.42	3.29	23.4	2.80	2.45	9.00
	T*9X*D20	FC/MC/PC60D	1310	36.0	4.28	2.51	23.0	2.92	2.31	9.00
			1000*	36.0	3.68	3.15	23.0	2.92	2.31	9.00
	T*9X*D20	UC48D	1240	36.0	4.10	2.60	23.2	2.86	2.38	9.00
			1000*	36.0	3.50	3.24	23.2	2.86	2.38	9.00
	T*9X*D20	UC60D	1310	36.0	4.22	2.53	23.0	2.88	2.34	9.00
			1000*	36.0	3.62	3.17	23.0	2.88	2.34	9.00
	Y*(8,L)C*C16	FC/MC/PC48C	1195	36.0	3.90	2.72	23.4	2.74	2.50	9.00
			1000*	36.0	3.30	3.36	23.4	2.74	2.50	9.00
	Y*(8,L)C*C16	FC/PC60C	1185	36.0	4.12	2.59	23.2	2.88	2.36	9.00
			1000*	36.0	3.52	3.23	23.2	2.88	2.36	9.00
	Y*(8,L)C*C16	UC48C	1210	36.0	4.06	2.63	23.4	2.84	2.41	9.00
			1000*	36.0	3.46	3.27	23.4	2.84	2.41	9.00
	Y*(8,L)C*C16	UC60C	1195	36.0	4.08	2.61	23.0	2.82	2.39	9.00
			1000*	36.0	3.48	3.25	23.0	2.82	2.39	9.00
	Y*(8,L)C*C20	FC/MC/PC48C	1150	36.0	3.92	2.71	23.4	2.76	2.48	9.00
			1000*	36.0	3.32	3.35	23.4	2.76	2.48	9.00
	Y*(8,L)C*C20	FC/PC60C	1215	36.0	4.14	2.59	23.2	2.88	2.36	9.00
			1000*	36.0	3.54	3.23	23.2	2.88	2.36	9.00
	Y*(8,L)C*C20	UC48C	1155	36.0	4.10	2.60	23.2	2.86	2.38	9.00
			1000*	36.0	3.50	3.24	23.2	2.86	2.38	9.00
	Y*(8,L)C*C20	UC60C	1215	36.0	4.06	2.63	23.0	2.82	2.39	9.00
			1000*	36.0	3.46	3.27	23.0	2.82	2.39	9.00
	Y*9C*C16	FC/MC/PC48C	1195	36.0	3.90	2.70	23.6	2.72	2.54	9.00
			990*	35.8	3.54	2.96	23.0	2.66	2.53	8.60
	Y*9C*C16	FC/PC60C	1235	36.0	4.02	2.62	23.6	2.78	2.49	8.50
			1020*	35.8	3.72	2.84	22.8	2.74	2.44	8.30

For notes, see Page 18.

HEATING CAPACITY - With High Efficiency Motor Furnaces (Continued)

UNIT MODEL	FURNACE MODEL	COIL[1] MODEL	HEATING[2]							
			RATED CFM	47°F			17°F			HSPF
				MBH	COP	KW	MBH	COP	KW	STD
16 SEER HP WITH HIGH EFFICIENCY MOTOR FURNACES[3]										
YZF03613(C)	Y*9C*C20	FC/MC/PC48C	1315	36.0	3.94	2.68	23.8	2.72	2.56	8.50
			965*	35.8	3.56	2.95	23.0	2.66	2.53	8.30
	Y*9C*C20	FC/PC60C	1325	36.0	4.10	2.57	23.6	2.80	2.47	8.50
			980*	35.8	3.76	2.81	22.8	2.78	2.40	8.30
	Y*9C*D20	FC/MC/PC48D	1240	36.0	3.96	2.69	23.4	2.76	2.48	9.00
			1000*	36.0	3.36	3.33	23.4	2.76	2.48	9.00
	Y*9C*D20	FC/MC/PC60D	1225	36.0	4.12	2.62	23.4	2.86	2.40	9.00
			1000*	36.0	3.52	3.26	23.4	2.86	2.40	9.00
YZF04214(C)	T*(8,L)V*C16	FC/MC62D	1420	41.0	4.08	2.94	25.8	2.72	2.77	8.50
	T*(8,L)V*C16	FC/PC60C	1185	40.5	3.82	3.10	25.6	2.64	2.84	8.50
			1050*	40.0	3.92	2.99	25.4	2.78	2.68	8.40
	T*(8,L)V*C16	UC60C	1195	41.0	4.00	3.00	25.4	2.72	2.73	8.50
			1050*	40.0	3.92	2.99	25.4	2.78	2.68	8.40
	T*(8,L)V*C20	FC/MC62D	1365	40.5	4.06	2.92	25.8	2.74	2.75	8.50
	T*(8,L)V*C20	FC/PC60C	1215	41.0	4.08	2.94	25.8	2.80	2.69	8.50
			970*	40.0	3.86	3.04	25.2	2.74	2.69	8.40
	T*(8,L)V*C20	UC60C	1215	41.0	4.00	3.00	25.4	2.72	2.73	8.50
			970*	40.0	3.86	3.04	25.2	2.74	2.69	8.40
	T*9(C,V)*C16	FC/MC62D	1445	41.0	4.00	3.00	26.2	2.68	2.86	8.20
	T*9(C,V)*C16	FC/PC60C	1235	41.0	4.02	2.98	26.0	2.74	2.78	8.20
			1020*	40.0	3.82	3.07	25.4	2.72	2.74	8.10
	T*9(C,V)*C16	UC60C	1235	41.0	3.90	3.08	25.6	2.68	2.79	8.20
			1020*	40.0	3.82	3.07	25.4	2.72	2.74	8.10
	T*9(C,V)*C20	FC/MC62D	1445	41.0	4.06	2.95	26.0	2.72	2.80	8.20
	T*9(C,V)*C20	FC/PC60C	1330	41.5	4.08	2.98	26.0	2.76	2.76	8.20
			980*	40.0	3.84	3.05	25.4	2.74	2.72	8.10
	T*9(C,V)*C20	UC60C	1330	41.5	4.02	3.02	25.6	2.70	2.77	8.20
			980*	40.0	3.84	3.05	25.4	2.74	2.72	8.10
	T*9(C,V)*D20	FC/MC/PC60D	1225	41.0	4.06	2.95	25.8	2.78	2.71	8.50
			1075*	40.0	3.94	2.97	25.4	2.76	2.70	8.40
	T*9(C,V)*D20	FC/MC62D	1455	41.0	4.08	2.94	25.8	2.74	2.75	8.20
			1235*	40.0	3.96	2.96	25.6	2.74	2.74	8.10
	T*9(C,V)*D20	UC60D	1225	41.0	3.96	3.03	25.6	2.70	2.77	8.20
			1075*	40.0	3.94	2.97	25.4	2.76	2.70	8.10
	Y*(8,L)C*C16	FC/MC62D	1420	41.0	4.08	2.94	25.8	2.72	2.77	8.50
	Y*(8,L)C*C16	FC/PC60C	1185	40.5	3.82	3.10	25.6	2.64	2.84	8.50
			1050*	40.0	3.92	2.99	25.4	2.78	2.68	8.40
	Y*(8,L)C*C16	UC60C	1195	41.0	4.00	3.00	25.4	2.72	2.73	8.50
			1050*	40.0	3.92	2.99	25.4	2.78	2.68	8.40
	Y*(8,L)C*C20	FC/MC62D	1365	40.5	4.06	2.92	25.8	2.74	2.75	8.50
	Y*(8,L)C*C20	FC/PC60C	1215	41.0	4.08	2.94	25.8	2.80	2.69	8.50
			970*	40.0	3.86	3.04	25.2	2.74	2.69	8.40
	Y*(8,L)C*C20	UC60C	1215	41.0	4.00	3.00	25.4	2.72	2.73	8.50
			970*	40.0	3.86	3.04	25.2	2.74	2.69	8.40
	Y*9C*C16	FC/MC62D	1445	41.0	4.00	3.00	26.2	2.68	2.86	8.20
	Y*9C*C16	FC/PC60C	1235	41.0	4.02	2.98	26.0	2.74	2.78	8.20
			1020*	40.0	3.82	3.07	25.4	2.72	2.74	8.10
	Y*9C*C16	UC60C	1235	41.0	3.90	3.08	25.6	2.68	2.79	8.20
			1020*	40.0	3.82	3.07	25.4	2.72	2.74	8.10
	Y*9C*C20	FC/MC62D	1445	41.0	4.06	2.95	26.0	2.72	2.80	8.20
	Y*9C*C20	FC/PC60C	1330	41.5	4.08	2.98	26.0	2.76	2.76	8.20
			980*	40.0	3.84	3.05	25.4	2.74	2.72	8.10
	Y*9C*C20	UC60	1330	41.5	4.02	3.02	25.6	2.70	2.77	8.20
			980*	40.0	3.84	3.05	25.4	2.74	2.72	8.10
	Y*9C*D20	FC/MC/PC60D	1225	41.0	4.06	2.95	25.8	2.78	2.71	8.50
			1075*	40.0	3.94	2.97	25.4	2.76	2.70	8.40

For notes, see Page 18.

HEATING CAPACITY - With High Efficiency Motor Furnaces (Continued)

UNIT MODEL	FURNACE MODEL	COIL[1] MODEL	HEATING[2]							
			RATED CFM	47°F			17°F			HSPF
				MBH	COP	KW	MBH	COP	KW	STD
16 SEER HP WITH HIGH EFFICIENCY MOTOR FURNACES[3]										
YZF04214(C)	Y*9C*D20	FC/MC62D	1455	41.0	4.08	2.94	25.8	2.74	2.75	8.20
			1235*	40.0	3.96	2.96	25.6	2.74	2.74	8.10
	Y*9C*D20	UC60C	1225	41.0	3.96	3.03	25.6	2.70	2.77	8.20
			1075*	40.0	3.94	2.97	25.4	2.76	2.70	8.10
YZF04813(C)	T*(8,L)V*C16	FC64D	1635	48.0	3.86	3.64	34.4	2.72	3.70	9.00
			1000*	48.0	3.37	4.33	34.4	2.72	3.71	9.00
	T*(8,L)V*C20	FC64D	1630	48.0	3.88	3.62	34.2	2.74	3.65	9.00
			1000*	48.0	3.39	4.31	34.2	2.74	3.66	9.00
	T*(8,L)X*C16	FC64D	1610	48.0	3.90	3.60	34.2	2.76	3.63	9.00
			1000*	48.0	3.41	4.29	34.2	2.76	3.63	9.00
	T*(8,L)X*C20	FC/MC62D	1665	48.0	3.84	3.66	33.8	2.70	3.66	9.00
			1200*	48.0	3.43	4.29	33.8	2.70	3.67	9.00
	T*(8,L)X*C20	FC64D	1665	48.0	3.92	3.58	34.0	2.76	3.60	9.00
			1200*	48.0	3.51	4.21	34.0	2.76	3.61	9.00
	T*9(C,V)*C16	FC/MC62D	1590	48.0	3.84	3.66	34.4	2.72	3.70	9.00
			1445*	47.5	3.56	4.16	34.2	2.82	3.66	8.30
	T*9(C,V)*C16	FC64D	1590	48.0	3.84	3.66	34.4	2.72	3.70	9.00
			1000*	47.5	3.35	4.39	34.4	2.72	3.71	9.00
	T*9(C,V)*C20	FC/MC62D	1655	48.0	3.72	3.78	34.2	2.64	3.80	8.50
			1445*	47.5	3.60	4.11	34.0	2.84	3.61	8.30
	T*9(C,V)*C20	FC64D	1655	48.0	3.78	3.72	34.6	2.70	3.75	8.50
			1445*	47.5	3.64	4.06	34.4	2.92	3.55	8.30
	T*9(C,V)*D20	FC/MC62D	1630	48.0	3.68	3.82	34.0	2.62	3.80	8.50
			1445*	47.5	3.62	4.09	33.8	2.86	3.57	8.30
	T*9(C,V)*D20	FC64D	1630	48.0	3.80	3.70	34.4	2.72	3.71	8.50
			1455*	47.5	3.68	4.02	34.2	2.92	3.55	8.30
	T*9X*C16	FC64D	1550	48.0	3.88	3.62	34.2	2.74	3.65	9.00
			1000*	48.0	3.39	4.31	34.2	2.74	3.66	9.00
	T*9X*C20	FC/MC62D	1595	48.0	3.76	3.74	33.6	2.68	3.67	9.00
			1200*	48.0	3.35	4.34	33.6	2.68	3.67	9.00
	T*9X*C20	FC64D	1595	48.0	3.92	3.58	34.0	2.76	3.60	9.00
			1200*	48.0	3.51	4.21	34.0	2.76	3.61	9.00
	T*9X*D20	FC64D	1610	48.0	3.88	3.62	34.2	2.74	3.65	9.00
			1200*	48.0	3.47	4.25	34.2	2.74	3.66	9.00
	Y*(8,L)C*C16	FC64D	1635	48.0	3.86	3.87	34.4	2.72	3.71	9.00
			1000*	48.0	3.37	4.33	34.4	2.72	3.71	9.00
	Y*(8,L)C*C20	FC64D	1630	48.0	3.88	3.85	34.2	2.74	3.66	9.00
			1000*	48.0	3.39	4.31	34.2	2.74	3.66	9.00
	Y*9C*C16	FC/MC62D	1590	48.0	3.84	3.66	34.4	2.72	3.70	9.00
			1445*	47.5	3.56	4.16	34.2	2.82	3.66	8.30
	Y*9C*C16	FC64D	1590	48.0	3.84	3.66	34.4	2.72	3.70	9.00
			1000*	47.5	3.35	4.39	34.4	2.72	3.71	9.00
	Y*9C*C20	FC/MC62D	1655	48.0	3.72	3.78	34.2	2.64	3.80	8.50
			1445*	47.5	3.60	4.11	34.0	2.84	3.61	8.30
	Y*9C*C20	FC64D	1655	48.0	3.78	3.72	34.6	2.70	3.75	9.00
			1445*	47.5	3.64	4.06	34.4	2.92	3.55	8.30
	Y*9C*D20	FC/MC62D	1630	48.0	3.68	3.82	34.0	2.62	3.80	8.50
			1445*	47.5	3.62	4.09	33.8	2.86	3.57	8.30
	Y*9C*D20	FC64D	1630	48.0	3.80	3.70	34.4	2.72	3.71	8.50
			1455*	47.5	3.68	4.02	34.2	2.92	3.55	8.30

1. MC coils available with a factory installed horizontal drain pan. See price pages for specific model number.
2. Heating MBH based on AHRI standards of 70 °F DB (Dry Bulb) entering indoor air, 72% RH (Relative Humidity) outdoor air with 25 feet of interconnecting piping and no supplemental electric heat operation.
3. High Efficiency Motor Furnaces have B.O.D (Blower on Delay) standard.

* Notates “Hot Heat Pump” performance. These ratings are not AHRI Listed.

COP equals MBH output divided by (total KW input x 3.412).

HSPF (Heating Seasonal Performance Factor) is the total heating output during a normal annual usage period for heating divided by the total electric power input during the same period.

— = Not Applicable.

PSC furnaces, such as the TG8S, TGLS, and TG9S, use Coil Only Ratings.

HEATING CAPACITY - With High Efficiency Motor Furnaces

UNIT MODEL	FURNACE MODEL	COIL MODEL[1]	HEATING[2]					
			STAGE	RATED CFM	NET MBH 47 OD	NET MBH 17 OD	HSPF	COP @ 47
16 SEER HP WITH HIGH EFFICIENCY MOTOR FURNACES[3]								
YZF06013(C)	T*(8,L)V*C20	FC/MC62D	1	1060	42.0	–	–	3.38
			2	1620	58.0	38.5	9.00	3.68
			2	1060*	57.5	38.5	9.00	3.20
	T*(8,L)V*C20	FC64D	1	1060	42.5	–	–	3.48
			2	1630	58.0	38.5	9.00	3.78
			2	1060*	58.0	39.0	9.00	3.30
	T*(8,L)X*C20	FC64D	1	835	41.0	–	–	3.16
			2	1665	58.0	38.5	9.00	3.84
			2	835*	56.5	39.0	8.75	2.92
	T*9(C,V)*C20	FC/MC62D	1	1040	42.0	–	–	3.36
			2	1655	58.0	38.5	9.00	3.62
			2	1040*	57.5	38.5	9.00	3.20
	T*9(C,V)*C20	FC64D	1	1040	42.5	–	–	3.46
			2	1655	58.0	39.0	9.00	3.72
			2	1040*	58.0	39.0	9.00	3.28
	T*9(C,V)*D20	FC/MC62D	1	1085	42.0	–	–	3.36
			2	1630	58.0	38.5	9.00	3.64
			2	1085*	57.5	38.5	9.00	3.20
	T*9(C,V)*D20	FC64D	1	1085	42.5	–	–	3.46
			2	1630	58.0	38.5	9.00	3.74
			2	1085*	58.0	39.0	9.00	3.28
	T*9X*C20	FC/MC62D	1	1220	42.5	–	–	3.52
			2	1595	58.0	38.0	9.00	3.68
			2	1220*	58.0	38.5	9.00	3.38
	T*9X*C20	FC64D	1	1220	42.5	–	–	3.60
			2	1595	58.0	38.5	9.00	3.78
			2	1220*	58.0	39.0	9.00	3.48
	T*9X*D20	FC/MC62D	1	1240	42.5	–	–	3.54
			2	1610	58.0	38.5	9.00	3.66
			2	1240*	58.0	38.5	9.00	3.40
	T*9X*D20	FC64D	1	1240	42.5	–	–	3.64
			2	1610	58.0	38.5	9.00	3.76
			2	1240*	58.0	39.0	9.00	3.48
	Y*(8,L)C*C20	FC/MC62D	1	1060	42.0	–	–	3.38
			2	1620	58.0	38.5	9.00	3.68
			2	1060*	57.5	38.5	9.00	3.20
	Y*(8,L)C*C20	FC64D	1	1060	42.5	–	–	3.48
			2	1630	58.0	38.5	9.00	3.78
			2	1060*	58.0	39.0	9.00	3.30
	Y*9C*C20	FC/MC62D	1	1040	42.0	–	–	3.36
			2	1655	58.0	38.5	9.00	3.62
			2	1040*	57.5	38.5	9.00	3.20
	Y*9C*C20	FC64D	1	1040	42.5	–	–	3.46
			2	1655	58.0	39.0	9.00	3.72
			2	1040*	58.0	39.0	9.00	3.28
	Y*9C*D20	FC/MC62D	1	1085	42.0	–	–	3.36
			2	1630	58.0	38.5	9.00	3.64
			2	1085*	57.5	38.5	9.00	3.20
	Y*9C*D20	FC64D	1	1085	42.5	–	–	3.46
			2	1630	58.0	38.5	9.00	3.74
			2	1085*	58.0	39.0	9.00	3.28

For notes, see Page 20.

1. Rated CFM same as for cooling.
2. Heating MBH based on AHRI standards of 70 °F DB (Dry Bulb) entering indoor air, 72% RH (Relative Humidity) outdoor air with 25 feet of interconnecting piping and no supplemental electric heat operation.
3. High Efficiency Motor Furnaces have B.O.D (Blower on Delay) standard.

COP equals MBH output divided by (total KW input x 3.412).

HSPF (Heating Seasonal Performance Factor) is the total heating output during a normal annual usage period for heating divided by the total electric power input during the same period.

— = Not Applicable.

PSC furnaces, such as the TG8S, TGLS, and TG9S, use Coil Only Ratings.

ACCESSORIES

TXV Kits - S1-1TVM series thermal expansion valves precisely meter refrigerant for optimum performance over a wide range of conditions. See System Charge table for TXV part number for each model.

Start Assist Kit (S1-2SA067) - Provides increased starting torque for areas with low voltage. See Hard Start Kit Accessory Installation Manual for Hard Start Kit part number for each model.

Temperature Sensor (S1-37309243000) - The temperature sensor is used to sense plenum temperature, and is optional with a gas or oil back-up heat source. Compatible only with 13 SEER and higher heat pumps.

Dehumidistat (S1-2HU16700124) - Provides increased dehumidification when matched with variable speed furnace or air handler.

Heat Pump Risers (S1-52635389000, S1-52635390000, S1-52635391000) - 3", 6", or 12" risers mount easily in composite base pan recesses, ensuring the unit stays clear of snow and ice build-up in harsh winter weather.

Thermostats - Compatible thermostat controls are available through accessory sourcing. For optimum performance, these outdoor units are fully compatiable with the **Residential Touch Screen Communicating Control S1-TTSCC01**.

SOUND POWER LEVEL - TYPICAL OCTAVE BAND SPECTRUM (without tone adjustment)

Size	Test Condition	63	125	250	500	1000	2000	4000	8000	dBA	SQI
24	Cooling Mode	72	76	69	67	67	62	58	53	71	19.1
	Heating Mode	71	79	70	68	67	62	58	55	71	19.0
30	Cooling Mode	73	70	67	68	69	61	55	48	71	19.1
	Heating Mode	76	72	69	69	66	61	57	60	71	19.1
36	Cooling Mode	75	79	70	69	67	61	56	49	72	19.1
	Heating Mode	71	80	64	61	62	58	54	53	68	19.0
42	Cooling Mode	70	69	72	68	68	60	55	47	71	19.0
	Heating Mode	70	71	72	67	64	60	55	48	70	19.2
48	Cooling Mode	77	78	72	70	66	61	56	50	72	19.1
	Heating Mode	75	82	73	72	66	61	58	54	73	19.1
60	Cooling Mode - Stage 1	75	75	70	68	64	61	56	50	70	19.2
	Heating Mode - Stage 1	75	76	69	68	66	60	56	51	70	19.1
60	Cooling Mode - Stage 2	73	78	69	68	64	61	56	50	70	19.2
	Heating Mode - Stage 2	72	81	70	69	66	63	58	51	72	19.2

Rated in accordance with ARI Standard 270.

TYPICAL INSTALLATION

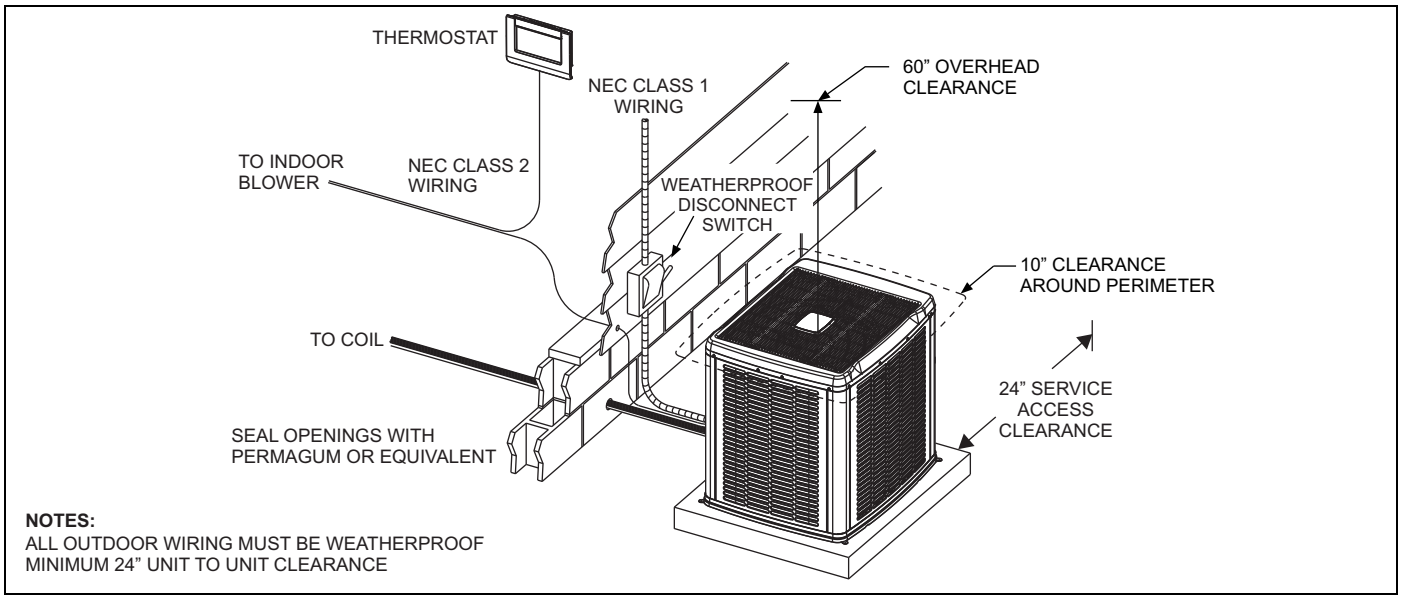

COOLING PERFORMANCE DATA																
OUTDOOR UNIT MODEL NO.		YZF02413(C)														
INDOOR COIL MODEL NO.		AHX30														
CONDENSER ENTERING AIR TEMPERATURE	ID CFM	635					835					1035				
	ID DB (°F)	80	80	75	80	80	80	80	75	80	80	80	80	75	80	80
	ID WB (°F)	57	62	62	67	72	57	62	62	67	72	57	62	62	67	72
65	T.C.	21.7	24.2	24.1	26.2	28.4	23.9	25.3	25.2	27.3	29.5	26.1	26.4	26.3	28.5	30.5
	S.C.	21.7	20.6	17.8	17.8	14.8	23.9	23.6	19.7	19.6	15.7	26.1	26.4	21.7	21.4	16.6
	K.W.	1.19	1.19	1.19	1.19	1.19	1.26	1.26	1.27	1.27	1.27	1.34	1.34	1.34	1.35	1.35
75	T.C.	21.2	23.2	23.1	25.1	27.2	23.1	24.2	24.0	26.1	28.2	25.1	25.1	25.0	27.2	29.3
	S.C.	21.2	20.1	17.3	17.3	14.4	23.1	22.8	19.2	19.1	15.3	25.1	25.1	21.2	20.9	16.2
	K.W.	1.36	1.36	1.36	1.36	1.37	1.43	1.44	1.44	1.44	1.45	1.51	1.51	1.51	1.52	1.53
85	T.C.	20.6	22.1	22.1	24.0	26.0	22.3	23.0	22.9	24.9	27.0	24.1	23.9	23.8	25.9	28.0
	S.C.	20.6	19.6	16.8	16.8	13.9	22.3	22.0	18.8	18.6	14.9	24.1	23.9	20.7	20.4	15.8
	K.W.	1.52	1.53	1.53	1.54	1.55	1.61	1.61	1.61	1.62	1.63	1.69	1.69	1.69	1.70	1.71
95	T.C.	20.0	21.1	21.0	23.0	24.8	21.5	21.9	21.8	23.8	25.7	23.1	22.6	22.5	24.5	26.7
	S.C.	20.0	19.2	16.4	16.3	13.4	21.5	21.3	18.3	18.1	14.4	23.1	22.6	20.2	19.8	15.4
	K.W.	1.69	1.70	1.70	1.71	1.72	1.78	1.78	1.78	1.79	1.81	1.86	1.86	1.86	1.87	1.89
105	T.C.	19.1	19.8	19.8	21.6	23.4	20.5	20.7	20.4	22.3	24.1	21.8	21.6	21.1	23.0	24.9
	S.C.	19.1	18.6	15.8	15.7	12.8	20.5	20.5	17.7	17.5	13.7	21.8	21.6	19.6	19.3	14.7
	K.W.	1.90	1.90	1.90	1.92	1.93	1.98	1.99	1.98	2.00	2.01	2.07	2.07	2.06	2.08	2.10
115	T.C.	18.1	18.6	18.6	20.3	21.9	19.4	19.6	19.1	20.8	22.5	20.6	20.6	19.6	21.4	23.1
	S.C.	18.1	18.1	15.3	15.0	12.2	19.4	19.6	17.1	16.9	13.1	20.6	20.6	19.0	18.7	13.9
	K.W.	2.11	2.11	2.11	2.12	2.14	2.19	2.19	2.19	2.20	2.22	2.28	2.28	2.27	2.29	2.30
125	T.C.	17.2	17.3	17.4	18.9	20.5	18.3	18.5	17.8	19.4	20.9	19.4	19.6	18.2	19.8	21.4
	S.C.	17.2	17.3	14.8	14.4	11.6	18.3	18.5	16.6	16.3	12.4	19.4	19.6	18.2	18.2	13.2
	K.W.	2.32	2.31	2.32	2.33	2.34	2.40	2.40	2.39	2.41	2.43	2.49	2.49	2.47	2.49	2.51
NOTE: ALL CAPACITIES INCLUDE INDOOR FAN HEAT. KW VALUES ARE FOR THE SYSTEM (OUTDOOR + INDOOR).																

Multipliers for determining the performance with other indoor sections.

NOTE: For dry bulb temperatures different than those listed (between 73-87 °F), sensible capacity increases by 1060 BTUH per 1000 CFM per degree above the listed temperature and decreases by 1060 BTUH per 1000 CFM per degree below the listed temperature.

Air Handler	Coil	T.C.	S.C.	KW
–	FC/MC/PC32	0.97	0.95	1.08
–	FC/MC/PC35	0.97	0.95	1.08
–	FC/MC/PC37	0.98	0.97	1.08
–	FC/MC/PC43	0.98	0.97	1.08
AHE24B	–	1.00	0.98	0.99
AHE30B	–	1.00	0.98	0.99
AHR24B	–	0.97	0.93	1.03
AHV24B	–	0.97	0.93	0.97
AHV30B	–	0.99	0.96	0.99
AHV36C	–	1.00	0.97	0.97
AV*36	–	0.99	0.96	0.96
MV12B	FC/MC35B	1.00	0.97	0.98
MV12B	FC/MC43B	1.01	0.99	0.98
MX12B	FC/MC35B	1.00	0.98	0.95
MX12B	FC/MC43B	0.99	0.96	0.96

Continued on next page.

Furnace	Coil	T.C.	S.C.	KW
T*(8,L)V*A12	FC/MC/PC32A	0.99	0.95	0.99
T*(8,L)V*A12	FC/MC/PC37A	1.01	0.99	0.99
T*(8,L)V*B12	FC/MC/PC35B	1.00	0.97	0.98
T*(8,L)V*B12	FC/MC/PC43B	1.01	0.99	0.98
T*(8,L)V*C16	FC/MC/PC35C	1.00	0.97	0.97
T*(8,L)V*C16	FC/MC/PC43C	1.01	0.99	0.97
T*(8,L)V*C20	FC/MC/PC35C	0.99	0.96	0.97
T*(8,L)V*C20	FC/MC/PC43C	0.99	0.96	0.96
T*(8,L)X*A12	FC/MC/PC32A	1.00	0.98	0.96
T*(8,L)X*A12	FC/MC/PC37A	1.02	1.03	0.96
T*(8,L)X*B12	FC/MC/PC35B	1.01	1.02	0.96
T*(8,L)X*B12	FC/MC/PC43B	1.03	1.04	0.96
T*(8,L)X*C16	FC/MC/PC35C	1.02	1.03	0.97
T*(8,L)X*C16	FC/MC/PC43C	1.02	1.04	0.96
T*(8,L)X*C20	FC/MC/PC35C	1.01	1.03	0.98
T*(8,L)X*C20	FC/MC/PC43C	1.01	0.99	0.97
T*9(C,V)*B12	FC/MC/PC35B	0.99	0.97	1.00
T*9(C,V)*B12	FC/MC/PC43B	1.01	0.99	1.00
T*9(C,V)*C16	FC/MC/PC35C	1.01	1.03	0.99
T*9(C,V)*C16	FC/MC/PC43C	1.01	0.99	0.99
T*9(C,V)*C20	FC/MC/PC35C	0.99	0.96	0.97
T*9(C,V)*C20	FC/MC/PC43C	1.02	1.05	0.99
T*9V*A10	FC/MC/PC32A	0.98	0.96	1.03

Furnace	Coil	T.C.	S.C.	KW
T*9V*A10	FC/MC/PC37A	0.99	0.98	1.03
T*9X*A10	FC/MC/PC32A	0.98	0.94	1.01
T*9X*A10	FC/MC/PC37A	0.98	0.95	1.00
T*9X*B12	FC/MC/PC35B	1.00	0.98	0.96
T*9X*B12	FC/MC/PC43B	1.01	0.99	0.96
T*9X*C16	FC/MC/PC35C	1.00	0.98	0.96
T*9X*C16	FC/MC/PC43C	1.01	0.99	0.96
T*9X*C20	FC/MC/PC35C	1.00	0.97	0.97
T*9X*C20	FC/MC/PC43C	1.01	0.99	0.97
Y*(8,L)C*A12	FC/MC/PC32A	0.99	0.95	0.99
Y*(8,L)C*A12	FC/MC/PC37A	1.01	0.99	0.99
Y*(8,L)C*B12	FC/MC/PC35B	1.00	0.97	0.98
Y*(8,L)C*B12	FC/MC/PC43B	1.01	0.99	0.98
Y*(8,L)C*C16	FC/MC/PC35C	1.00	0.97	0.97
Y*(8,L)C*C16	FC/MC/PC43C	1.01	0.99	0.97
Y*(8,L)C*C20	FC/MC/PC35C	0.99	0.96	0.97
Y*(8,L)C*C20	FC/MC/PC43C	0.99	0.96	0.96
Y*9C*B12	FC/MC/PC35B	0.99	0.97	1.00
Y*9C*B12	FC/MC/PC43B	1.01	0.99	1.00
Y*9C*C16	FC/MC/PC35C	1.01	1.03	0.99
Y*9C*C16	FC/MC/PC43C	1.01	0.99	0.99
Y*9C*C20	FC/MC/PC35C	0.99	0.96	0.97
Y*9C*C20	FC/MC/PC43C	1.02	1.05	0.99

COOLING PERFORMANCE DATA

OUTDOOR UNIT MODEL NO.		YZF03013(C)														
INDOOR COIL MODEL NO.		AHX36														
CONDENSER ENTERING AIR TEMPERATURE	ID CFM	805					1005					1205				
	ID DB (°F)	80	80	75	80	80	80	80	75	80	80	80	80	75	80	80
	ID WB (°F)	57	62	62	67	72	57	62	62	67	72	57	62	62	67	72
65	T.C.	27.5	29.6	29.7	32.4	35.6	29.4	30.7	30.7	33.7	36.7	31.4	31.8	31.8	35.0	37.9
	S.C.	27.5	25.6	22.0	21.8	17.9	29.4	28.8	24.1	23.9	19.1	31.4	31.8	26.2	26.0	20.4
	K.W.	1.49	1.49	1.49	1.49	1.48	1.56	1.56	1.57	1.56	1.55	1.63	1.63	1.64	1.63	1.62
75	T.C.	26.5	28.3	28.3	31.0	34.0	28.4	29.3	29.3	32.1	35.1	30.2	30.3	30.3	33.3	36.2
	S.C.	26.5	25.0	21.4	21.2	17.3	28.4	27.9	23.5	23.2	18.5	30.2	30.3	25.6	25.3	19.7
	K.W.	1.67	1.67	1.67	1.67	1.67	1.74	1.74	1.75	1.74	1.74	1.82	1.82	1.82	1.82	1.81
85	T.C.	25.5	27.0	27.0	29.6	32.5	27.3	27.9	27.9	30.6	33.5	29.1	28.8	28.7	31.5	34.5
	S.C.	25.5	24.4	20.8	20.6	16.7	27.3	26.9	22.8	22.6	17.9	29.1	28.8	24.9	24.6	19.1
	K.W.	1.85	1.85	1.85	1.85	1.86	1.93	1.93	1.92	1.93	1.93	2.01	2.00	2.00	2.00	2.00
95	T.C.	24.5	25.7	25.7	28.2	31.0	26.2	26.5	26.4	29.0	31.9	27.9	27.3	27.2	29.7	32.8
	S.C.	24.5	23.8	20.1	19.9	16.1	26.2	25.9	22.2	21.9	17.2	27.9	27.3	24.3	23.9	18.4
	K.W.	2.03	2.03	2.03	2.03	2.04	2.11	2.11	2.10	2.11	2.11	2.19	2.18	2.18	2.18	2.18
105	T.C.	23.2	24.0	24.0	26.4	29.0	24.7	25.0	24.7	27.1	29.7	26.2	25.9	25.3	27.7	30.5
	S.C.	23.2	23.0	19.4	19.2	15.3	24.7	24.8	21.5	21.2	16.4	26.2	25.9	23.5	23.1	17.6
	K.W.	2.27	2.27	2.27	2.27	2.28	2.35	2.34	2.34	2.34	2.35	2.42	2.42	2.42	2.42	2.42
115	T.C.	22.0	22.3	22.4	24.6	27.0	23.3	23.4	22.9	25.1	27.6	24.5	24.5	23.4	25.7	28.2
	S.C.	22.0	22.3	18.7	18.4	14.5	23.3	23.4	20.7	20.4	15.6	24.5	24.5	22.7	22.4	16.7
	K.W.	2.51	2.51	2.51	2.51	2.51	2.58	2.58	2.58	2.58	2.58	2.66	2.66	2.66	2.65	2.66
125	T.C.	20.7	20.6	20.7	22.7	25.0	21.8	21.9	21.1	23.2	25.4	22.9	23.1	21.6	23.7	25.9
	S.C.	20.7	20.6	17.9	17.7	13.8	21.8	21.9	19.9	19.6	14.8	22.9	23.1	21.6	21.6	15.8
	K.W.	2.75	2.74	2.74	2.74	2.74	2.82	2.82	2.82	2.82	2.82	2.89	2.89	2.89	2.89	2.89

NOTE: ALL CAPACITIES INCLUDE INDOOR FAN HEAT. KW VALUES ARE FOR THE SYSTEM (OUTDOOR + INDOOR).

Multipliers for determining the performance with other indoor sections.

NOTE: For dry bulb temperatures different than those listed (between 73-87 °F), sensible capacity increases by 1060 BTUH per 1000 CFM per degree above the listed temperature and decreases by 1060 BTUH per 1000 CFM per degree below the listed temperature.

Air Handler	Coil	T.C.	S.C.	KW
–	FC/MC/PC37	0.97	0.97	1.10
–	FC/MC/PC43	0.97	0.97	1.10
AHE36C	–	0.99	1.00	1.00
AHR36B	–	0.98	1.00	1.11
AHV36C	–	0.97	0.95	0.99
AV*36	–	0.99	0.99	1.00
MV12B	FC/MC43B	0.99	1.00	1.02
MV16C	FC/MC43C	0.99	1.00	1.02
MX12B	FC/MC43B	1.01	1.04	1.03
MX16C	FC/MC43C	0.99	1.00	0.99

Furnace	Coil	T.C.	S.C.	KW
T*(8,L)V*A12	FC/MC/PC37A	0.98	0.96	1.04
T*(8,L)V*B12	FC/MC/PC43B	0.99	1.00	1.05
T*(8,L)V*C16	FC/MC/PC43C	1.00	1.01	1.02
T*(8,L)V*C20	FC/MC/PC43C	1.00	1.01	1.00
T*(8,L)X*A12	FC/MC/PC37A	1.01	1.04	1.03
T*(8,L)X*B12	FC/MC/PC43B	1.01	1.05	1.03
T*(8,L)X*C16	FC/MC/PC43C	0.99	0.98	0.99
T*(8,L)X*C20	FC/MC/PC43C	0.98	0.95	0.99
T*9(C,V)*B12	FC/MC/PC43B	0.99	1.00	1.05
T*9(C,V)*C16	FC/MC/PC43C	0.99	1.00	1.04
T*9(C,V)*C20	FC/MC/PC43C	0.99	1.00	1.02
T*9X*A10	FC/MC/PC37A	0.97	0.95	1.11
T*9X*C16	FC/MC/PC43C	0.99	1.02	1.01
Y*(8,L)C*A12	FC/MC/PC37A	0.98	0.96	1.04
Y*(8,L)C*B12	FC/MC/PC43B	0.99	1.00	1.05
Y*(8,L)C*C16	FC/MC/PC43C	1.00	1.01	1.02
Y*(8,L)C*C20	FC/MC/PC43C	1.00	1.01	1.00
Y*9C*B12	FC/MC/PC43B	0.99	1.00	1.05
Y*9C*C16	FC/MC/PC43C	0.99	1.00	1.04
Y*9C*C20	FC/MC/PC43C	0.99	1.00	1.02

COOLING PERFORMANCE DATA

OUTDOOR UNIT MODEL NO.		YZF03613(C)														
INDOOR COIL MODEL NO.		AHX42														
CONDENSER ENTERING AIR TEMPERATURE	ID CFM	1000					1200					1400				
	ID DB (°F)	80	80	75	80	80	80	80	75	80	80	80	80	75	80	80
	ID WB (°F)	57	62	62	67	72	57	62	62	67	72	57	62	62	67	72
65	T.C.	34.1	36.2	36.4	39.6	43.0	36.1	37.4	37.5	40.8	44.1	38.1	38.5	38.5	42.0	45.3
	S.C.	34.1	31.2	26.9	26.6	21.7	36.1	34.5	28.9	28.5	22.8	38.1	37.8	30.9	30.3	23.9
	K.W.	1.93	1.93	1.94	1.94	1.95	2.01	2.02	2.02	2.03	2.04	2.10	2.10	2.10	2.13	2.12
75	T.C.	32.9	34.7	34.8	38.0	41.2	34.8	35.7	35.7	38.9	42.2	36.6	36.6	36.7	39.9	43.3
	S.C.	32.9	30.5	26.1	25.8	21.0	34.8	33.4	28.1	27.7	22.1	36.6	36.3	30.1	29.6	23.1
	K.W.	2.20	2.20	2.20	2.21	2.23	2.29	2.29	2.29	2.30	2.32	2.37	2.37	2.37	2.39	2.41
85	T.C.	31.8	33.1	33.2	36.3	39.4	33.5	34.0	34.0	37.1	40.3	35.2	34.8	34.8	37.8	41.2
	S.C.	31.8	29.8	25.4	25.1	20.3	33.5	32.3	27.4	27.0	21.3	35.2	34.7	29.4	28.9	22.4
	K.W.	2.47	2.47	2.47	2.49	2.51	2.56	2.56	2.56	2.57	2.60	2.65	2.64	2.65	2.65	2.69
95	T.C.	30.6	31.5	31.6	34.6	37.6	32.1	32.3	32.3	35.2	38.4	33.7	33.0	33.0	35.8	39.2
	S.C.	30.6	29.1	24.6	24.3	19.6	32.1	31.1	26.6	26.2	20.6	33.7	33.0	28.7	28.2	21.6
	K.W.	2.74	2.74	2.74	2.77	2.79	2.83	2.83	2.83	2.84	2.89	2.92	2.91	2.92	2.90	2.98
105	T.C.	29.0	29.3	29.6	32.4	35.3	30.4	30.4	30.1	32.9	35.9	31.7	31.4	30.6	33.4	36.5
	S.C.	29.0	28.2	23.7	23.4	18.6	30.4	29.9	25.7	25.3	19.7	31.7	31.4	27.7	27.2	20.7
	K.W.	3.06	3.05	3.07	3.05	3.07	3.13	3.12	3.15	3.12	3.16	3.20	3.20	3.23	3.20	3.25
115	T.C.	27.4	27.2	27.6	30.2	33.0	28.6	28.5	27.9	30.6	33.4	29.8	29.8	28.2	31.0	33.9
	S.C.	27.4	27.2	22.8	22.5	17.6	28.6	28.5	24.8	24.4	18.7	29.8	29.8	26.7	26.3	19.7
	K.W.	3.38	3.35	3.40	3.32	3.34	3.43	3.42	3.47	3.41	3.43	3.49	3.49	3.54	3.50	3.52
125	T.C.	25.9	25.0	25.6	28.0	30.7	26.9	26.6	25.7	28.4	30.9	27.9	28.2	25.8	28.7	31.2
	S.C.	25.9	25.0	21.9	21.6	16.7	26.9	26.6	23.8	23.5	17.7	27.9	28.2	25.8	25.4	18.8
	K.W.	3.70	3.65	3.73	3.60	3.62	3.73	3.71	3.79	3.70	3.70	3.77	3.77	3.85	3.79	3.79

NOTE: ALL CAPACITIES INCLUDE INDOOR FAN HEAT. KW VALUES ARE FOR THE SYSTEM (OUTDOOR + INDOOR).

Multipliers for determining the performance with other indoor sections.

NOTE: For dry bulb temperatures different than those listed (between 73-87 °F), sensible capacity increases by 1060 BTUH per 1000 CFM per degree above the listed temperature and decreases by 1060 BTUH per 1000 CFM per degree below the listed temperature

Air Handler	Coil	T.C.	S.C.	KW
–	FC/MC/PC48	0.97	0.97	1.00
–	FC/MC/PC60	0.98	0.98	1.01
–	UC48	0.98	0.98	1.00
–	UC60	0.97	0.96	1.00
AHE42D	–	0.99	1.08	0.92
AHE48D	–	0.99	1.08	0.91
AHR42C	–	0.98	1.08	1.00
AHV42D	–	0.99	1.08	0.92
AHV48D	–	0.99	1.06	0.91
AV*48	–	1.01	1.11	0.92
MV12D	FC/MC48D	1.00	1.08	0.91
MV12D	FC/MC60D	0.99	1.07	0.93
MV16C	FC/MC48C	0.99	1.08	0.93
MX12D	FC/MC48D	0.99	1.08	0.93
MX12D	FC/MC60D	1.01	1.13	0.93
MX16C	FC/MC48C	1.00	1.08	0.91

Continued on next page.

Furnace	Coil	T.C.	S.C.	KW
T*(8,L)V*C16	FC/MC/PC48C	0.99	0.99	0.93
T*(8,L)V*C16	FC/PC60C	1.01	1.01	0.93
T*(8,L)V*C16	UC48C	1.00	1.00	0.94
T*(8,L)V*C16	UC60C	0.99	0.98	0.93
T*(8,L)V*C20	FC/MC/PC48C	0.99	0.99	0.93
T*(8,L)V*C20	FC/PC60C	1.00	1.00	0.94
T*(8,L)V*C20	UC48C	1.00	1.00	0.93
T*(8,L)V*C20	UC60C	0.98	0.98	0.93
T*(8,L)X*C16	FC/MC/PC48C	1.00	1.00	0.91
T*(8,L)X*C16	FC/PC60C	1.01	1.01	0.91
T*(8,L)X*C16	UC48C	1.01	1.01	0.91
T*(8,L)X*C16	UC60C	0.99	0.99	0.91
T*(8,L)X*C20	FC/MC/PC48C	1.01	1.03	0.92
T*(8,L)X*C20	FC/PC60C	1.01	1.05	0.93
T*(8,L)X*C20	UC48C	1.01	1.04	0.93
T*(8,L)X*C20	UC60C	1.00	1.02	0.93
T*9(C,V)*C16	FC/MC/PC48C	0.99	0.98	0.95
T*9(C,V)*C16	FC/PC60C	0.99	0.98	0.96
T*9(C,V)*C20	FC/MC/PC48C	0.99	0.99	0.96
T*9(C,V)*C20	FC/PC60C	1.00	1.00	0.95
T*9(C,V)*D20	FC/MC/PC48D	0.99	0.99	0.94
T*9(C,V)*D20	FC/MC/PC60D	1.00	1.00	0.94
T*9X*C16	FC/MC/PC48C	1.01	1.03	0.95
T*9X*C16	FC/PC60C	1.01	1.05	0.94

Furnace	Coil	T.C.	S.C.	KW
T*9X*C16	UC48C	1.01	1.03	0.95
T*9X*C16	UC60C	0.99	1.04	0.94
T*9X*C20	FC/MC/PC48C	0.99	0.99	0.93
T*9X*C20	FC/PC60C	1.00	1.00	0.92
T*9X*C20	UC48C	1.00	1.00	0.93
T*9X*C20	UC60C	0.99	0.98	0.93
T*9X*D20	FC/MC/PC48D	0.99	0.99	0.93
T*9X*D20	FC/MC/PC60D	1.02	1.06	0.92
T*9X*D20	UC48D	1.00	1.00	0.92
T*9X*D20	UC60D	1.00	1.04	0.92
Y*(8,L)C*C16	FC/MC/PC48C	0.99	0.99	0.93
Y*(8,L)C*C16	FC/PC60C	1.01	1.01	0.93
Y*(8,L)C*C16	UC48C	1.00	1.00	0.94
Y*(8,L)C*C16	UC60C	0.99	0.98	0.93
Y*(8,L)C*C20	FC/MC/PC48C	0.99	0.99	0.93
Y*(8,L)C*C20	FC/PC60C	1.00	1.00	0.94
Y*(8,L)C*C20	UC48C	1.00	1.00	0.93
Y*(8,L)C*C20	UC60C	0.98	0.98	0.93
Y*9C*C16	FC/MC/PC48C	0.99	0.98	0.95
Y*9C*C16	FC/PC60C	0.99	0.98	0.96
Y*9C*C20	FC/MC/PC48C	0.99	0.99	0.96
Y*9C*C20	FC/PC60C	1.00	1.00	0.95
Y*9C*D20	FC/MC/PC48D	0.99	0.99	0.94
Y*9C*D20	FC/MC/PC60D	0.99	1.09	0.91

COOLING PERFORMANCE DATA

OUTDOOR UNIT MODEL NO.		YZF04214(C)														
INDOOR COIL MODEL NO.		AHE60														
CONDENSER ENTERING AIR TEMPERATURE	ID CFM	1185					1385					1585				
	ID DB (°F)	80	80	75	80	80	80	80	75	80	80	80	80	75	80	80
	ID WB (°F)	57	62	62	67	72	57	62	62	67	72	57	62	62	67	72
65	T.C.	39.3	41.5	41.5	45.3	49.4	41.1	42.5	42.5	46.4	50.6	42.9	43.5	43.5	47.5	51.8
	S.C.	37.4	34.6	29.5	29.1	23.2	39.1	38.0	31.5	31.1	24.4	40.7	41.4	33.5	33.1	25.6
	K.W.	2.22	2.22	2.23	2.26	2.31	2.31	2.30	2.30	2.36	2.39	2.40	2.37	2.38	2.45	2.47
75	T.C.	37.9	39.6	39.6	43.4	47.3	39.6	40.5	40.5	44.3	48.4	41.3	41.4	41.4	45.3	49.4
	S.C.	36.1	33.8	28.7	28.4	22.5	37.7	36.6	30.7	30.3	23.6	39.3	39.3	32.7	32.2	24.8
	K.W.	2.52	2.53	2.53	2.55	2.56	2.60	2.61	2.61	2.62	2.65	2.68	2.69	2.69	2.70	2.73
85	T.C.	36.5	37.7	37.8	41.5	45.3	38.2	38.5	38.5	42.3	46.2	39.8	39.3	39.3	43.0	47.0
	S.C.	34.7	33.1	27.9	27.6	21.8	36.3	35.2	29.9	29.5	22.9	37.8	37.3	31.9	31.4	24.0
	K.W.	2.83	2.84	2.84	2.83	2.82	2.90	2.92	2.92	2.89	2.90	2.97	3.00	3.00	2.95	2.98
95	T.C.	35.1	35.9	35.9	39.6	43.3	36.7	36.5	36.6	40.2	44.0	38.2	37.1	37.3	40.8	44.6
	S.C.	33.4	32.3	27.1	26.8	21.1	34.9	33.8	29.1	28.7	22.1	36.3	35.3	31.0	30.5	23.1
	K.W.	3.13	3.15	3.14	3.11	3.08	3.19	3.23	3.22	3.16	3.16	3.25	3.31	3.31	3.21	3.24
105	T.C.	33.4	33.6	33.6	37.0	40.4	34.8	34.6	34.2	37.5	41.1	36.1	35.6	34.8	38.1	41.7
	S.C.	31.8	31.0	26.1	25.8	20.1	33.1	32.4	28.1	27.7	21.1	34.3	33.8	30.0	29.5	22.2
	K.W.	3.44	3.45	3.44	3.45	3.45	3.51	3.53	3.52	3.51	3.53	3.59	3.61	3.61	3.57	3.61
115	T.C.	31.7	31.3	31.4	34.4	37.6	32.9	32.7	31.8	34.9	38.2	34.0	34.0	32.3	35.4	38.7
	S.C.	30.1	29.8	25.2	24.8	19.1	31.2	31.0	27.1	26.7	20.1	32.4	32.3	29.0	28.5	21.2
	K.W.	3.75	3.74	3.74	3.78	3.82	3.84	3.83	3.82	3.86	3.90	3.92	3.92	3.90	3.94	3.98
125	T.C.	30.0	29.1	29.2	31.8	34.8	31.0	30.7	29.5	32.3	35.3	31.9	32.4	29.8	32.7	35.8
	S.C.	28.5	28.5	24.3	23.8	18.1	29.4	29.7	26.1	25.7	19.1	30.4	30.8	28.0	27.5	20.2
	K.W.	4.06	4.04	4.04	4.12	4.18	4.16	4.14	4.12	4.21	4.27	4.26	4.23	4.20	4.31	4.35

NOTE: ALL CAPACITIES INCLUDE INDOOR FAN HEAT. KW VALUES ARE FOR THE SYSTEM (OUTDOOR + INDOOR).

Multipliers for determining the performance with other indoor sections.

NOTE: For dry bulb temperatures different than those listed (between 73-87 °F), sensible capacity increases by 1060 BTUH per 1000 CFM per degree above the listed temperature and decreases by 1060 BTUH per 1000 CFM per degree below the listed temperature.

Air Handler	Coil	T.C.	S.C.	KW
–	FC/MC/PC60	0.96	0.94	1.06
–	FC/MC62	0.97	0.98	1.09
–	UC60	0.96	0.95	1.06
AHE48D	–	0.98	0.98	0.98
AHE60D	–	1.00	1.00	1.00
AHR60D	–	0.97	0.98	1.07
AHV48D	–	0.98	0.96	0.98
AHV60D	–	0.98	1.00	1.02
AV*48	–	1.00	1.00	0.98
MV16C	FC60C	0.98	0.98	0.99
MV20D	FC/MC60D	1.00	1.02	0.99
MV20D	FC/MC62D	1.00	1.00	1.03
MX16C	FC60C	0.98	0.99	0.97
MX20D	FC/MC60D	1.01	1.03	0.98
MX20D	FC/MC62D	1.01	1.05	1.01

Furnace	Coil	T.C.	S.C.	KW
T*(8,L)V*C16	FC/MC62D	1.00	1.02	1.06
T*(8,L)V*C16	FC/PC60C	0.97	0.96	0.98
T*(8,L)V*C16	UC60C	0.97	0.97	0.98
T*(8,L)V*C20	FC/MC62D	0.98	0.99	1.03
T*(8,L)V*C20	FC/PC60C	0.98	0.99	0.99
T*(8,L)V*C20	UC60C	0.97	0.97	0.99
T*9(C,V)*C16	FC/MC62D	0.98	1.01	1.07

Furnace	Coil	T.C.	S.C.	KW
T*9(C,V)*C16	FC/PC60C	1.00	1.00	1.03
T*9(C,V)*C16	UC60C	0.97	0.96	1.02
T*9(C,V)*C20	FC/MC62D	1.00	1.03	1.06
T*9(C,V)*C20	FC/PC60C	1.01	1.03	1.03
T*9(C,V)*C20	UC60C	0.98	1.01	1.02
T*9(C,V)*D20	FC/MC/PC60D	0.98	0.99	1.00
T*9(C,V)*D20	FC/MC62D	1.00	1.03	1.05
T*9(C,V)*D20	UC60D	0.97	0.97	1.00
Y*(8,L)C*C16	FC/MC62D	1.00	1.02	1.06
Y*(8,L)C*C16	FC/PC60C	0.97	0.96	0.98
Y*(8,L)C*C16	UC60C	0.97	0.97	0.98
Y*(8,L)C*C20	FC/MC62D	0.98	0.99	1.03
Y*(8,L)C*C20	FC/PC60C	0.98	0.99	0.99
Y*(8,L)C*C20	UC60C	0.97	0.97	0.99
Y*9C*C16	FC/MC62D	0.98	1.01	1.07
Y*9C*C16	FC/PC60C	1.00	1.00	1.03
Y*9C*C16	UC60C	0.97	0.96	1.02
Y*9C*C20	FC/MC62D	1.00	1.03	1.06
Y*9C*C20	FC/PC60C	1.01	1.03	1.03
Y*9C*C20	UC60C	0.98	1.01	1.02
Y*9C*D20	FC/MC/PC60D	0.98	0.99	1.00
Y*9C*D20	FC/MC62D	1.00	1.03	1.05
Y*9C*D20	UC60D	0.97	0.97	1.00

COOLING PERFORMANCE DATA

OUTDOOR UNIT MODEL NO.		YZF04813(C)														
INDOOR COIL MODEL NO.		AHX60														
CONDENSER ENTERING AIR TEMPERATURE	ID CFM	1400					1600					1800				
	ID DB (°F)	80	80	75	80	80	80	80	75	80	80	80	80	75	80	80
	ID WB (°F)	57	62	62	67	72	57	62	62	67	72	57	62	62	67	72
65	T.C.	45.7	48.6	48.5	52.9	58.0	47.6	49.7	49.6	54.2	59.4	49.4	50.9	50.8	55.5	60.7
	S.C.	45.7	42.2	36.3	35.9	29.9	47.6	45.2	38.3	37.9	30.9	49.4	48.1	40.3	39.9	32.0
	K.W.	2.57	2.58	2.58	2.59	2.62	2.65	2.66	2.66	2.67	2.71	2.73	2.73	2.73	2.75	2.79
75	T.C.	44.1	46.4	46.3	50.6	55.4	45.8	47.4	47.4	51.7	56.6	47.6	48.4	48.4	52.9	57.8
	S.C.	44.1	41.4	35.3	35.0	28.7	45.8	44.1	37.3	36.9	29.8	47.6	46.9	39.3	38.8	30.8
	K.W.	2.90	2.91	2.91	2.92	2.95	2.98	2.98	2.98	3.00	3.04	3.06	3.06	3.06	3.08	3.12
85	T.C.	42.5	44.3	44.2	48.3	52.8	44.1	45.1	45.1	49.3	53.8	45.7	45.9	45.9	50.3	54.8
	S.C.	42.5	40.5	34.3	34.0	27.5	44.1	43.0	36.3	35.9	28.6	45.7	45.6	38.3	37.8	29.6
	K.W.	3.23	3.24	3.24	3.26	3.29	3.31	3.31	3.31	3.34	3.37	3.39	3.39	3.39	3.42	3.45
95	T.C.	40.9	42.1	42.1	45.9	50.2	42.4	42.7	42.8	46.8	51.0	43.9	43.4	43.5	47.7	51.9
	S.C.	40.9	39.6	33.4	33.0	26.3	42.4	42.0	35.3	34.9	27.4	43.9	43.4	37.3	36.7	28.4
	K.W.	3.56	3.56	3.56	3.59	3.62	3.64	3.64	3.64	3.67	3.70	3.73	3.72	3.72	3.75	3.79
105	T.C.	38.2	38.6	38.6	42.6	46.5	39.6	39.6	39.2	43.1	47.2	41.0	40.6	39.7	43.6	48.0
	S.C.	38.2	37.7	31.8	31.6	24.8	39.6	39.6	33.8	33.4	25.9	41.0	40.6	35.8	35.2	27.0
	K.W.	3.96	3.96	3.96	4.00	4.03	4.05	4.04	4.04	4.07	4.11	4.13	4.13	4.12	4.15	4.19
115	T.C.	35.6	35.1	35.0	39.3	42.8	36.8	36.4	35.5	39.4	43.4	38.0	37.7	36.0	39.6	44.1
	S.C.	35.6	35.1	30.3	30.2	23.3	36.8	36.4	32.3	32.0	24.4	38.0	37.7	34.3	33.8	25.6
	K.W.	4.36	4.36	4.36	4.40	4.44	4.45	4.45	4.44	4.48	4.52	4.54	4.54	4.52	4.55	4.60
125	T.C.	32.9	31.6	31.5	36.0	39.1	34.0	33.3	31.9	35.8	39.6	35.1	34.9	32.3	35.5	40.2
	S.C.	32.9	31.6	28.8	28.8	21.8	34.0	33.3	30.8	30.6	22.9	35.1	34.9	32.3	32.3	24.1
	K.W.	4.77	4.76	4.75	4.81	4.84	4.86	4.85	4.83	4.88	4.93	4.95	4.94	4.92	4.95	5.01

NOTE: ALL CAPACITIES INCLUDE INDOOR FAN HEAT. KW VALUES ARE FOR THE SYSTEM (OUTDOOR + INDOOR).

Multipliers for determining the performance with other indoor sections.

NOTE: For dry bulb temperatures different than those listed (between 73-87 °F), sensible capacity increases by 1060 BTUH per 1000 CFM per degree above the listed temperature and decreases by 1060 BTUH per 1000 CFM per degree below the listed temperature.

Air Handler	Coil	T.C.	S.C.	KW
–	FC/MC62	0.99	0.98	1.01
–	FC64	1.01	1.02	1.01
AHE60D	–	1.00	1.23	1.00
AHR60D	–	0.98	1.22	1.05
AHV60D	–	1.01	1.01	1.01
MV20D	FC/MC62D	1.00	1.00	0.96
MV20D	FC64	0.96	0.95	0.96
MX20D	FC/MC62D	0.99	0.99	0.94
MX20D	FC64	0.96	0.95	0.99

Furnace	Coil	T.C.	S.C.	KW
T*(8,L)V*C16	FC64D	1.03	1.04	0.99
T*(8,L)V*C20	FC64D	1.03	1.05	0.98
T*(8,L)X*C16	FC64D	1.03	1.05	0.97
T*(8,L)X*C20	FC/MC62D	1.01	1.02	0.97
T*(8,L)X*C20	FC64D	1.04	1.05	0.97
T*9(C,V)*C16	FC/MC62D	0.99	0.99	1.04
T*9(C,V)*C16	FC64D	1.03	1.04	0.99
T*9(C,V)*C20	FC/MC62D	0.99	1.00	1.04
T*9(C,V)*C20	FC64D	1.01	1.01	1.05
T*9(C,V)*D20	FC/MC62D	0.99	0.98	1.04
T*9(C,V)*D20	FC64D	1.01	1.01	1.04
T*9X*C16	FC64D	1.03	1.05	0.98
T*9X*C20	FC/MC62D	0.99	0.99	0.96
T*9X*C20	FC64D	1.03	1.05	0.97
T*9X*D20	FC64D	1.03	1.05	0.98
Y*(8,L)C*C16	FC64D	1.03	1.04	0.99
Y*(8,L)C*C20	FC64D	1.03	1.05	0.98
Y*9C*C16	FC/MC62D	0.99	0.99	1.04
Y*9C*C16	FC64D	1.03	1.04	0.99
Y*9C*C20	FC/MC62D	0.99	1.00	1.04
Y*9C*C20	FC64D	1.01	1.01	1.05
Y*9C*D20	FC/MC62D	0.99	0.98	1.04
Y*9C*D20	FC64D	1.01	1.01	1.04

COOLING PERFORMANCE DATA - HIGH CFM 2-STAGE OPERATION

OUTDOOR UNIT MODEL NO.		YZF06013(C)														
INDOOR COIL MODEL NO.		AHX60														
CONDENSER ENTERING AIR TEMPERATURE	ID CFM	1730					1930					2130				
	ID DB (°F)	80	80	75	80	80	80	80	75	80	80	80	80	75	80	80
	ID WB (°F)	57	62	62	67	72	57	62	62	67	72	57	62	62	67	72
65	T.C.	56.5	59.8	59.9	65.4	70.1	58.4	60.9	60.8	66.6	71.7	60.4	62.0	61.7	67.8	73.3
	S.C.	56.5	50.7	43.5	43.0	35.1	58.4	53.4	45.4	44.8	36.3	60.4	56.1	47.3	46.7	37.5
	K.W.	3.50	3.54	3.54	3.62	3.71	3.60	3.64	3.63	3.71	3.81	3.71	3.73	3.73	3.80	3.92
75	T.C.	54.3	56.8	56.9	62.1	67.1	56.0	57.8	57.7	63.2	68.3	57.8	58.8	58.5	64.2	69.6
	S.C.	54.3	49.5	42.2	41.6	33.7	56.0	52.1	44.1	43.5	34.8	57.8	54.8	45.9	45.4	35.9
	K.W.	3.90	3.94	3.93	4.01	4.11	4.00	4.03	4.03	4.10	4.20	4.11	4.12	4.12	4.19	4.30
85	T.C.	52.0	53.8	53.9	58.9	64.0	53.6	54.7	54.7	59.7	64.9	55.2	55.5	55.4	60.6	65.8
	S.C.	52.0	48.2	40.9	40.3	32.3	53.6	50.8	42.7	42.2	33.3	55.2	53.5	44.6	44.0	34.4
	K.W.	4.30	4.33	4.33	4.40	4.50	4.40	4.42	4.42	4.50	4.59	4.50	4.51	4.51	4.59	4.69
95	T.C.	49.8	50.8	50.9	55.6	60.9	51.2	51.5	51.6	56.3	61.5	52.7	52.3	52.3	57.1	62.1
	S.C.	49.8	46.9	39.5	39.0	30.9	51.2	49.6	41.4	40.8	31.9	52.7	52.2	43.3	42.6	32.8
	K.W.	4.70	4.72	4.72	4.80	4.90	4.80	4.81	4.81	4.89	4.99	4.90	4.90	4.90	4.98	5.08
105	T.C.	46.7	47.1	47.1	51.5	56.3	48.0	48.0	47.7	52.2	56.9	49.3	49.0	48.3	52.9	57.4
	S.C.	46.7	45.3	37.9	37.3	29.1	48.0	47.2	39.8	39.1	30.1	49.3	49.0	41.6	40.9	31.1
	K.W.	5.22	5.23	5.23	5.32	5.41	5.32	5.33	5.32	5.41	5.50	5.43	5.42	5.41	5.50	5.59
115	T.C.	43.6	43.3	43.2	47.5	51.7	44.7	44.6	43.8	48.0	52.2	45.9	45.8	44.3	48.6	52.7
	S.C.	43.6	43.3	36.2	35.7	27.4	44.7	44.6	38.1	37.5	28.3	45.9	45.8	40.0	39.2	29.3
	K.W.	5.75	5.74	5.74	5.84	5.92	5.85	5.85	5.83	5.92	6.01	5.95	5.95	5.92	6.01	6.10
125	T.C.	40.6	39.6	39.4	43.4	47.0	41.5	41.1	39.9	43.9	47.5	42.5	42.5	40.4	44.4	48.0
	S.C.	40.6	39.6	34.6	34.0	25.6	41.5	41.1	36.5	35.8	26.6	42.5	42.5	38.4	37.6	27.5
	K.W.	6.27	6.25	6.25	6.36	6.43	6.38	6.36	6.34	6.44	6.52	6.48	6.48	6.42	6.52	6.61

NOTE: ALL CAPACITIES INCLUDE INDOOR FAN HEAT. KW VALUES ARE FOR THE SYSTEM (OUTDOOR + INDOOR).

Multipliers for determining the performance with other indoor sections.

NOTE: For dry bulb temperatures different than those listed (between 73-87 °F), sensible capacity increases by 1060 BTUH per 1000 CFM per degree above the listed temperature and decreases by 1060 BTUH per 1000 CFM per degree below the listed temperature.

HIGH CFM

Air Handler	Coil	T.C.	S.C.	KW
–	FC/MC62D	0.99	0.97	1.02
–	FC64	1.02	1.02	1.03
AHE60D	–	1.00	0.99	1.00
AHV60D	–	0.98	0.94	0.98
MV20D	FC/MC62D	1.04	0.98	0.98
MV20D	FC64	1.07	1.02	0.98
MX20D	FC/MC62D	1.00	0.99	0.98
MX20D	FC64	1.04	1.03	0.98

Furnace	Coil	T.C.	S.C.	KW
T*(8,L)V*C20	FC/MC62D	1.03	0.98	0.99
T*(8,L)V*C20	FC64D	1.06	1.02	0.99
T*(8,L)X*C20	FC64D	1.07	1.02	0.99
T*9(C,V)*C20	FC/MC62D	1.02	0.97	1.01
T*9(C,V)*C20	FC64D	1.06	1.00	1.02
T*9(C,V)*D20	FC/MC62D	1.03	0.97	1.01
T*9(C,V)*D20	FC64D	1.06	1.00	1.01
T*9X*C20	FC/MC62D	1.03	0.97	0.98
T*9X*C20	FC64D	1.06	1.00	0.99
T*9X*D20	FC/MC62D	1.02	0.97	0.98
T*9X*D20	FC64D	1.06	1.00	0.99
Y*(8,L)C*C20	FC/MC62D	1.03	0.98	0.99
Y*(8,L)C*C20	FC64D	1.06	1.02	0.99
Y*9C*C20	FC/MC62D	1.02	0.97	1.01
Y*9C*C20	FC64D	1.06	1.00	1.02
Y*9C*D20	FC/MC62D	1.03	0.97	1.01
Y*9C*D20	FC64D	1.06	1.00	1.01

HEATING PERFORMANCE DATA

OUTDOOR UNIT MODEL NO.	YZF02413(C)									
INDOOR COIL MODEL NO.	FC/MC/PC35									
AIR TEMP. ENTERING OUTDOOR UNIT	AIR TEMP. ENTERING INDOOR COIL	ID CFM								
		600			800			1000		
		MBH	COP	KW	MBH	COP	KW	MBH	COP	KW
60	60	29.1	4.30	1.98	30.4	4.69	1.90	31.6	5.12	1.81
	70	28.3	3.78	2.20	29.4	4.12	2.09	30.5	4.49	1.99
	80	27.6	3.35	2.41	28.5	3.64	2.29	29.4	3.96	2.17
47	60	24.4	3.85	1.86	25.1	4.03	1.83	25.8	4.21	1.80
	70	24.1	3.35	2.10	24.6	3.53	2.04	25.2	3.72	1.99
	80	23.7	2.95	2.36	24.2	3.13	2.26	24.6	3.32	2.17
40	60	22.1	3.30	1.96	22.7	3.52	1.89	23.3	3.75	1.82
	70	21.8	2.95	2.17	22.3	3.17	2.06	22.8	3.40	1.96
	80	21.5	2.67	2.36	21.9	2.87	2.24	22.3	3.10	2.11
30	60	19.5	3.20	1.78	20.0	3.28	1.78	20.5	3.35	1.79
	70	19.1	2.81	1.99	19.5	2.89	1.97	19.8	2.97	1.96
	80	18.7	2.49	2.20	19.0	2.57	2.16	19.2	2.64	2.13
17	60	15.7	2.62	1.75	16.0	2.68	1.75	16.4	2.75	1.74
	70	15.3	2.15	2.08	15.6	2.29	2.00	15.9	2.43	1.92
	80	14.8	1.81	2.40	15.2	1.98	2.24	15.5	2.17	2.09
10	60	13.6	2.28	1.75	13.9	2.33	1.74	14.1	2.38	1.73
	70	12.9	1.95	1.94	13.3	2.03	1.92	13.7	2.10	1.91
	80	12.2	1.68	2.12	12.7	1.77	2.11	13.3	1.86	2.09

NOTE: ALL CAPACITIES ARE NET, WITH INDOOR FAN HEAT ALREADY DEDUCTED. KW VALUES ARE FOR THE SYSTEM (OUTDOOR + INDOOR).

Multipliers for determining the performance with other indoor section.

Air Handler	Coil	MBH	COP	KW
–	FC/MC/PC32	1.00	1.00	1.00
–	FC/MC/PC35	1.00	1.00	1.00
–	FC/MC/PC37	1.01	1.05	0.96
–	FC/MC/PC43	1.01	1.05	0.96
AHE24B	–	0.97	1.09	0.89
AHE30B	–	0.97	1.09	0.90
AHR24B	–	0.98	1.03	0.95
AHV24B	–	0.97	1.05	0.92
AHV30B	–	0.97	1.08	0.90
AHV36C	–	0.97	1.11	0.88
AV*36	–	0.97	1.10	0.87
MV12B	FC/MC35B	0.97	1.10	0.89
MV12B	FC/MC43B	0.98	1.12	0.88
MX12B	FC/MC35B	0.97	1.12	0.87
MX12B	FC/MC43B	0.97	1.10	0.87

Furnace	Coil	MBH	COP	KW
T*(8,L)V*A12	FC/MC/PC32A	0.97	1.07	0.91
T*(8,L)V*A12	FC/MC/PC37A	0.98	1.12	0.88
T*(8,L)V*B12	FC/MC/PC35B	0.97	1.09	0.89
T*(8,L)V*B12	FC/MC/PC43B	0.98	1.12	0.88
T*(8,L)V*C16	FC/MC/PC35C	0.97	1.10	0.88
T*(8,L)V*C16	FC/MC/PC43C	0.97	1.13	0.86
T*(8,L)V*C20	FC/MC/PC35C	0.97	1.07	0.90
T*(8,L)V*C20	FC/MC/PC43C	0.97	1.10	0.89
T*(8,L)X*A12	FC/MC/PC32A	0.97	1.11	0.88
T*(8,L)X*A12	FC/MC/PC37A	0.97	1.16	0.84
T*(8,L)X*B12	FC/MC/PC35B	0.97	1.12	0.87
T*(8,L)X*B12	FC/MC/PC43B	0.97	1.16	0.84
T*(8,L)X*C16	FC/MC/PC35C	0.97	1.13	0.86
T*(8,L)X*C16	FC/MC/PC43C	0.97	1.16	0.84

Furnace	Coil	MBH	COP	KW
T*(8,L)X*C20	FC/MC/PC35C	0.97	1.12	0.87
T*(8,L)X*C20	FC/MC/PC43C	0.97	1.13	0.86
T*9(C,V)*B12	FC/MC/PC35B	0.98	1.08	0.91
T*9(C,V)*B12	FC/MC/PC43B	0.98	1.11	0.88
T*9(C,V)*C16	FC/MC/PC35C	0.98	1.10	0.89
T*9(C,V)*C16	FC/MC/PC43C	0.98	1.12	0.88
T*9(C,V)*C20	FC/MC/PC35C	0.97	1.07	0.91
T*9(C,V)*C20	FC/MC/PC43C	0.98	1.14	0.86
T*9V*A10	FC/MC/PC32A	0.98	1.05	0.93
T*9V*A10	FC/MC/PC37A	0.99	1.08	0.92
T*9X*A10	FC/MC/PC32A	0.98	1.05	0.93
T*9X*A10	FC/MC/PC37A	0.98	1.08	0.91
T*9X*B12	FC/MC/PC35B	0.97	1.11	0.88
T*9X*B12	FC/MC/PC43B	0.97	1.14	0.86
T*9X*C16	FC/MC/PC35C	0.97	1.11	0.88
T*9X*C16	FC/MC/PC43C	0.97	1.14	0.86
T*9X*C20	FC/MC/PC35C	0.97	1.10	0.88
T*9X*C20	FC/MC/PC43C	0.97	1.13	0.86
Y*(8,L)C*A12	FC/MC/PC32A	0.97	1.07	0.91
Y*(8,L)C*A12	FC/MC/PC37A	0.98	1.12	0.88
Y*(8,L)C*B12	FC/MC/PC35B	0.97	1.09	0.89
Y*(8,L)C*B12	FC/MC/PC43B	0.98	1.12	0.88
Y*(8,L)C*C16	FC/MC/PC35C	0.97	1.10	0.88
Y*(8,L)C*C16	FC/MC/PC43C	0.97	1.13	0.86
Y*(8,L)C*C20	FC/MC/PC35C	0.97	1.07	0.90
Y*(8,L)C*C20	FC/MC/PC43C	0.97	1.10	0.89
Y*9C*B12	FC/MC/PC35B	0.98	1.08	0.91
Y*9C*B12	FC/MC/PC43B	0.98	1.11	0.88
Y*9C*C16	FC/MC/PC35C	0.98	1.10	0.89
Y*9C*C16	FC/MC/PC43C	0.98	1.12	0.88
Y*9C*C20	FC/MC/PC35C	0.97	1.07	0.91
Y*9C*C20	FC/MC/PC43C	0.98	1.14	0.86

HEATING PERFORMANCE DATA										
OUTDOOR UNIT MODEL NO.		**YZF03013(C)**								
INDOOR COIL MODEL NO.		**FC/MC/PC43**								
AIR TEMP. ENTERING OUTDOOR UNIT	**AIR TEMP. ENTERING INDOOR COIL**	ID CFM								
		800			1000			1200		
		MBH	COP	KW	MBH	COP	KW	MBH	COP	KW
60	60	34.9	4.32	2.37	35.6	4.54	2.30	36.2	4.77	2.22
	70	34.2	3.84	2.61	34.9	4.04	2.53	35.5	4.25	2.45
	80	33.5	3.44	2.85	34.1	3.62	2.76	34.8	3.82	2.67
47	60	30.3	3.93	2.26	30.6	4.03	2.22	30.9	4.14	2.18
	70	29.6	3.48	2.50	30.0	3.60	2.44	30.3	3.71	2.39
	80	29.0	3.11	2.73	29.4	3.23	2.66	29.7	3.36	2.59
40	60	26.7	3.54	2.21	27.3	3.66	2.18	27.9	3.79	2.15
	70	26.5	3.18	2.44	27.0	3.29	2.40	27.4	3.40	2.36
	80	26.4	2.89	2.67	26.7	2.98	2.62	27.0	3.08	2.57
30	60	24.4	3.33	2.14	24.0	3.30	2.13	23.6	3.28	2.11
	70	23.4	2.90	2.37	23.5	2.94	2.34	23.6	2.98	2.32
	80	22.5	2.54	2.60	23.0	2.64	2.55	23.5	2.74	2.52
17	60	19.3	2.75	2.06	19.7	2.79	2.06	20.0	2.83	2.07
	70	18.9	2.46	2.26	19.3	2.51	2.25	19.6	2.56	2.25
	80	18.6	2.21	2.46	18.9	2.27	2.44	19.3	2.32	2.44
10	60	16.7	2.45	2.00	15.9	2.30	2.02	15.0	2.16	2.04
	70	16.6	2.21	2.20	16.4	2.17	2.21	16.1	2.14	2.21
	80	16.4	2.01	2.39	16.8	2.06	2.40	17.3	2.12	2.38
NOTE: ALL CAPACITIES ARE NET, WITH INDOOR FAN HEAT ALREADY DEDUCTED. KW VALUES ARE FOR THE SYSTEM (OUTDOOR + INDOOR).										

Multipliers for determining the performance with other indoor section.

Air Handler	Coil	MBH	COP	KW
–	FC/MC/PC37	1.00	1.00	1.00
–	FC/MC/PC43	1.00	1.00	1.00
AHE36C	–	0.99	1.11	0.89
AHR36B	–	1.02	1.04	0.98
AHV36C	–	0.98	1.07	0.91
AV*36	–	0.98	1.10	0.89
MV12B	FC/MC43B	0.99	1.08	0.92
MV16C	FC/MC43C	0.99	1.08	0.91
MX12B	FC/MC43B	1.00	1.11	0.91
MX16C	FC/MC43C	0.98	1.09	0.90

Furnace	Coil	MBH	COP	KW
T*(8,L)V*A12	FC/MC/PC37A	0.99	1.06	0.94
T*(8,L)V*B12	FC/MC/PC43B	1.00	1.07	0.93
T*(8,L)V*C16	FC/MC/PC43C	0.99	1.09	0.91
T*(8,L)V*C20	FC/MC/PC43C	0.99	1.11	0.89
T*(8,L)X*A12	FC/MC/PC37A	1.00	1.11	0.90
T*(8,L)X*B12	FC/MC/PC43B	1.00	1.11	0.90
T*(8,L)X*C16	FC/MC/PC43C	0.98	1.08	0.91
T*(8,L)X*C20	FC/MC/PC43C	0.97	1.08	0.90
T*9(C,V)*B12	FC/MC/PC43B	1.00	1.06	0.94
T*9(C,V)*C16	FC/MC/PC43C	0.99	1.08	0.92
T*9(C,V)*C20	FC/MC/PC43C	0.99	1.08	0.91
T*9X*A10	FC/MC/PC37A	1.01	1.00	1.00
T*9X*C16	FC/MC/PC43C	0.99	1.10	0.90
Y*(8,L)C*A12	FC/MC/PC37A	0.99	1.06	0.94
Y*(8,L)C*B12	FC/MC/PC43B	1.00	1.07	0.93
Y*(8,L)C*C16	FC/MC/PC43C	0.99	1.09	0.91
Y*(8,L)C*C20	FC/MC/PC43C	0.99	1.11	0.89
Y*9C*B12	FC/MC/PC43B	1.00	1.06	0.94
Y*9C*C16	FC/MC/PC43C	0.99	1.08	0.92
Y*9C*C20	FC/MC/PC43C	0.99	1.08	0.91

HEATING PERFORMANCE DATA										
OUTDOOR UNIT MODEL NO.		**YZF03613(C)**								
INDOOR COIL MODEL NO.		**FC/MC/PC48**								
AIR TEMP. ENTERING OUTDOOR UNIT	**AIR TEMP. ENTERING INDOOR COIL**	ID CFM								
		1000			1200			1400		
		MBH	COP	KW	MBH	COP	KW	MBH	COP	KW
60	60	43.8	4.26	2.99	44.0	4.63	2.76	44.1	5.09	2.52
	70	42.9	3.74	3.33	43.2	4.07	3.08	43.4	4.48	2.82
	80	42.0	3.31	3.69	42.4	3.63	3.40	42.8	3.99	3.11
47	60	37.8	3.94	2.81	37.7	4.27	2.59	37.6	4.66	2.36
	70	37.0	3.47	3.13	37.1	3.75	2.90	37.1	4.08	2.67
	80	36.2	3.08	3.45	36.5	3.33	3.21	36.7	3.63	2.96
40	60	34.1	3.69	2.72	34.1	3.97	2.53	34.2	4.32	2.33
	70	33.5	3.26	3.03	33.7	3.52	2.82	33.9	3.83	2.60
	80	32.9	2.90	3.34	33.2	3.15	3.10	33.5	3.44	2.87
30	60	30.0	3.43	2.56	30.1	3.68	2.40	30.1	3.98	2.22
	70	29.4	3.00	2.87	29.5	3.23	2.68	29.7	3.48	2.50
	80	28.7	2.66	3.17	28.9	2.86	2.97	29.2	3.09	2.77
17	60	24.3	2.38	3.00	24.6	2.80	2.57	24.8	3.42	2.13
	70	23.8	2.31	3.01	24.1	2.63	2.69	24.5	3.03	2.37
	80	23.3	2.27	3.01	23.7	2.47	2.81	24.1	2.71	2.61
10	60	21.6	2.82	2.27	21.0	2.90	2.14	20.4	2.99	2.02
	70	21.1	2.49	2.51	20.8	2.65	2.32	20.4	2.83	2.13
	80	20.7	2.22	2.75	20.5	2.43	2.50	20.4	2.67	2.26
NOTE: ALL CAPACITIES ARE NET, WITH INDOOR FAN HEAT ALREADY DEDUCTED. KW VALUES ARE FOR THE SYSTEM (OUTDOOR + INDOOR).										

Multipliers for determining the performance with other indoor sections.

Air Handler	Coil	MBH	COP	KW
–	FC/MC/PC48	1.00	1.00	1.00
–	FC/MC/PC60	1.00	1.03	0.97
–	UC48	1.00	1.03	0.97
–	UC60	1.00	1.02	0.98
AHE42D	–	0.98	1.06	0.92
AHE48D	–	0.97	1.07	0.91
AHR42C	–	1.00	1.01	0.99
AHV42D	–	0.98	1.06	0.92
AHV48D	–	0.97	1.06	0.92
AV*48	–	0.98	1.12	0.88
MV12D	FC/MC48D	0.98	1.08	0.91
MV12D	FC/MC60D	0.98	1.09	0.90
MV16C	FC/MC48C	0.98	1.06	0.93
MX12D	FC/MC48D	0.98	1.06	0.93
MX12D	FC/MC60D	0.99	1.12	0.88
MX16C	FC/MC48C	0.98	1.08	0.91

Continued on next page.

Furnace	Coil	MBH	COP	KW
T*(8,L)V*C16	FC/MC/PC48C	0.98	1.06	0.93
T*(8,L)V*C16	FC/PC60C	0.98	1.11	0.88
T*(8,L)V*C16	UC48C	0.99	1.09	0.91
T*(8,L)V*C16	UC60C	0.98	1.09	0.90
T*(8,L)V*C20	FC/MC/PC48C	0.98	1.06	0.93
T*(8,L)V*C20	FC/PC60C	0.99	1.10	0.90
T*(8,L)V*C20	UC48C	0.98	1.10	0.89
T*(8,L)V*C20	UC60C	0.99	1.08	0.91
T*(8,L)X*C16	FC/MC/PC48C	0.98	1.08	0.91
T*(8,L)X*C16	FC/PC60C	0.98	1.13	0.87
T*(8,L)X*C16	UC48C	0.98	1.11	0.88
T*(8,L)X*C16	UC60C	0.98	1.10	0.88
T*(8,L)X*C20	FC/MC/PC48C	0.98	1.08	0.91
T*(8,L)X*C20	FC/PC60C	0.99	1.13	0.88
T*(8,L)X*C20	UC48C	0.99	1.11	0.89
T*(8,L)X*C20	UC60C	0.98	1.11	0.88
T*9(C,V)*C16	FC/MC/PC48C	0.99	1.04	0.95
T*9(C,V)*C16	FC/PC60C	0.99	1.05	0.94
T*9(C,V)*C20	FC/MC/PC48C	1.00	1.00	0.99
T*9(C,V)*C20	FC/PC60C	1.00	1.03	0.96
T*9(C,V)*D20	FC/MC/PC48D	0.98	1.05	0.94
T*9(C,V)*D20	FC/MC/PC60D	0.99	1.09	0.91
T*9X*C16	FC/MC/PC48C	0.99	1.07	0.93
T*9X*C16	FC/PC60C	0.99	1.11	0.89

Furnace	Coil	MBH	COP	KW
T*9X*C16	UC48C	0.99	1.10	0.90
T*9X*C16	UC60C	0.99	1.10	0.90
T*9X*C20	FC/MC/PC48C	0.98	1.06	0.93
T*9X*C20	FC/PC60C	0.99	1.10	0.89
T*9X*C20	UC48C	0.99	1.09	0.90
T*9X*C20	UC60C	0.98	1.09	0.90
T*9X*D20	FC/MC/PC48D	0.98	1.06	0.92
T*9X*D20	FC/MC/PC60D	0.99	1.14	0.87
T*9X*D20	UC48D	0.98	1.10	0.89
T*9X*D20	UC60D	0.99	1.12	0.88
Y*(8,L)C*C16	FC/MC/PC48C	0.98	1.06	0.93
Y*(8,L)C*C16	FC/PC60C	0.98	1.11	0.88
Y*(8,L)C*C16	UC48C	0.99	1.09	0.91
Y*(8,L)C*C16	UC60C	0.98	1.09	0.90
Y*(8,L)C*C20	FC/MC/PC48C	0.98	1.06	0.93
Y*(8,L)C*C20	FC/PC60C	0.99	1.10	0.90
Y*(8,L)C*C20	UC48C	0.98	1.10	0.89
Y*(8,L)C*C20	UC60C	0.99	1.08	0.91
Y*9C*C16	FC/MC/PC48C	0.99	1.04	0.95
Y*9C*C16	FC/PC60C	0.99	1.05	0.94
Y*9C*C20	FC/MC/PC48C	1.00	1.00	0.99
Y*9C*C20	FC/PC60C	1.00	1.03	0.96
Y*9C*D20	FC/MC/PC48D	0.98	1.05	0.94
Y*9C*D20	FC/MC/PC60D	0.99	1.09	0.91

HEATING PERFORMANCE DATA

OUTDOOR UNIT MODEL NO.		YZF04214(C)								
INDOOR COIL MODEL NO.		FC/MC62								
AIR TEMP. ENTERING OUTDOOR UNIT	AIR TEMP. ENTERING INDOOR COIL	ID CFM								
		1200			1400			1600		
		MBH	COP	KW	MBH	COP	KW	MBH	COP	KW
60	60	48.88	4.87	2.94	50.3	5.05	2.92	51.8	4.89	2.95
	70	46.8	4.29	3.20	48.1	4.45	3.17	49.5	4.31	3.20
	80	44.7	3.79	3.46	45.9	3.94	3.42	47.2	3.82	3.44
47	60	41.7	3.57	3.42	42.6	3.99	3.13	43.5	4.19	2.89
	70	40.2	3.46	3.40	41.0	3.70	3.25	41.9	3.71	3.14
	80	38.6	3.36	3.37	39.4	3.44	3.36	40.2	3.30	3.40
40	60	38.0	3.94	2.83	38.9	4.03	2.83	39.8	3.86	2.87
	70	36.1	3.44	3.07	37.1	3.54	3.07	38.1	3.41	3.12
	80	34.2	3.02	3.33	35.4	3.12	3.32	36.5	3.03	3.36
30	60	29.5	3.19	2.71	31.7	3.38	2.75	33.9	3.33	2.84
	70	29.7	2.92	2.98	31.1	3.03	3.01	32.5	2.93	3.09
	80	30.0	2.69	3.26	30.5	2.74	3.27	31.0	2.60	3.32
17	60	28.8	3.11	2.71	28.1	3.02	2.73	27.4	2.73	2.80
	70	22.5	2.30	2.87	22.0	2.23	2.89	21.5	2.02	2.97
	80	16.3	1.58	3.01	15.9	1.53	3.05	15.6	1.38	3.15
10	60	25.0	2.73	2.68	25.0	2.71	2.71	25.1	2.52	2.77
	70	19.2	1.99	2.83	19.3	1.98	2.86	19.4	1.83	2.95
	80	13.4	1.33	2.97	13.6	1.32	3.02	13.7	1.22	3.12

NOTE: ALL CAPACITIES ARE NET, WITH INDOOR FAN HEAT ALREADY DEDUCTED. KW VALUES ARE FOR THE SYSTEM (OUTDOOR + INDOOR).

Multipliers for determining the performance with other indoor section.

Air Handler	Coil	MBH	COP	KW
–	FC/MC/PC60	1.00	0.98	1.02
–	FC/MC62	1.00	1.00	1.00
–	UC60	1.01	1.03	0.98
AHE48D	–	0.99	1.05	0.94
AHE60D	–	0.98	1.11	0.88
AHR60D	–	1.00	1.06	0.94
AHV48D	–	0.99	1.04	0.95
AHV60D	–	0.98	1.09	0.89
AV*48	–	1.00	1.11	0.90
MV16C	FC60C	1.00	1.10	0.91
MV20D	FC/MC60D	1.00	1.12	0.89
MV20D	FC/MC62D	0.99	1.11	0.89
MX16C	FC60C	0.99	1.11	0.89
MX20D	FC/MC60D	1.00	1.15	0.87
MX20D	FC/MC62D	0.98	1.15	0.85

Furnace	Coil	MBH	COP	KW
T*(8,L)V*C16	FC/MC62D	1.00	1.10	0.91
T*(8,L)V*C16	FC/PC60C	0.99	1.03	0.96
T*(8,L)V*C16	UC60C	1.00	1.08	0.92
T*(8,L)V*C20	FC/MC62D	0.99	1.10	0.90
T*(8,L)V*C20	FC/PC60C	1.00	1.10	0.91
T*(8,L)V*C20	UC60C	1.00	1.08	0.92
T*9(C,V)*C16	FC/MC62D	1.00	1.08	0.92

Furnace	Coil	MBH	COP	KW
T*9(C,V)*C16	FC/PC60C	1.00	1.09	0.92
T*9(C,V)*C16	UC60C	1.00	1.05	0.95
T*9(C,V)*C20	FC/MC62D	1.00	1.10	0.91
T*9(C,V)*C20	FC/PC60C	1.01	1.10	0.92
T*9(C,V)*C20	UC60C	1.01	1.09	0.93
T*9(C,V)*D20	FC/MC/PC60D	1.00	1.10	0.91
T*9(C,V)*D20	FC/MC62D	1.00	1.10	0.91
T*9(C,V)*D20	UC60D	1.00	1.07	0.93
Y*(8,L)C*C16	FC/MC62D	1.00	1.10	0.91
Y*(8,L)C*C16	FC/PC60C	0.99	1.03	0.96
Y*(8,L)C*C16	UC60C	1.00	1.08	0.92
Y*(8,L)C*C20	FC/MC62D	0.99	1.10	0.90
Y*(8,L)C*C20	FC/PC60C	1.00	1.10	0.91
Y*(8,L)C*C20	UC60C	1.00	1.08	0.92
Y*9C*C16	FC/MC62D	1.00	1.08	0.92
Y*9C*C16	FC/PC60C	1.00	1.09	0.92
Y*9C*C16	UC60C	1.00	1.05	0.95
Y*9C*C20	FC/MC62D	1.00	1.10	0.91
Y*9C*C20	FC/PC60C	1.01	1.10	0.92
Y*9C*C20	UC60C	1.01	1.09	0.93
Y*9C*D20	FC/MC/PC60D	1.00	1.10	0.91
Y*9C*D20	FC/MC62D	1.00	1.10	0.91
Y*9C*D20	UC60D	1.00	1.07	0.93

HEATING PERFORMANCE DATA										
OUTDOOR UNIT MODEL NO.		**YZF04813(C)**								
INDOOR COIL MODEL NO.		**FC/MC62**								
AIR TEMP. ENTERING OUTDOOR UNIT	**AIR TEMP. ENTERING INDOOR COIL**	ID CFM								
		1400			1600			1800		
		MBH	COP	KW	MBH	COP	KW	MBH	COP	KW
60	60	61.1	4.66	3.84	61.2	4.75	3.78	61.3	4.84	3.71
	70	58.8	4.02	4.29	59.1	4.12	4.20	59.4	4.23	4.11
	80	56.6	3.50	4.74	57.0	3.61	4.63	57.4	3.74	4.50
47	60	51.6	3.80	3.98	51.8	3.89	3.90	52.0	3.98	3.83
	70	50.4	3.39	4.35	50.5	3.46	4.28	50.7	3.54	4.20
	80	49.1	3.05	4.72	49.3	3.11	4.65	49.4	3.16	4.59
40	60	43.8	3.41	3.76	45.7	3.61	3.71	47.7	3.82	3.66
	70	43.9	3.02	4.26	44.7	3.13	4.18	45.5	3.25	4.10
	80	43.9	2.71	4.75	43.6	2.75	4.65	43.3	2.79	4.55
30	60	39.0	3.12	3.66	40.1	3.24	3.63	41.3	3.35	3.61
	70	39.1	2.87	3.99	39.7	2.92	3.98	40.2	2.98	3.95
	80	39.3	2.65	4.34	39.2	2.66	4.32	39.1	2.67	4.29
17	60	34.0	2.79	3.57	34.2	2.84	3.53	34.5	2.89	3.50
	70	33.2	2.46	3.96	33.5	2.51	3.91	33.8	2.57	3.85
	80	32.5	2.20	4.32	32.7	2.25	4.26	33.0	2.30	4.20
10	60	29.5	2.56	3.38	29.7	2.57	3.38	29.8	2.57	3.40
	70	29.3	2.33	3.68	29.5	2.34	3.70	29.8	2.34	3.73
	80	29.0	2.13	3.99	29.4	2.14	4.03	29.8	2.15	4.06
NOTE: ALL CAPACITIES ARE NET, WITH INDOOR FAN HEAT ALREADY DEDUCTED. KW VALUES ARE FOR THE SYSTEM (OUTDOOR + INDOOR).										

Multipliers for determining the performance with other indoor sections.

Air Handler	Coil	MBH	COP	KW
–	FC/MC62	1.00	1.00	1.00
–	FC64	1.02	1.00	1.00
AHE60D	–	0.99	1.10	0.90
AHR60D	–	1.01	1.05	0.96
AHV60D	–	1.00	1.08	0.92
MV20D	FC/MC62D	1.01	1.13	0.89
MV20D	FC64	1.02	1.18	0.86
MX20D	FC/MC62D	1.01	1.17	0.86
MX20D	FC64	1.00	1.15	0.87

Furnace	Coil	MBH	COP	KW
T*(8,L)V*C16	FC64D	1.03	1.16	0.89
T*(8,L)V*C20	FC64D	1.03	1.17	0.88
T*(8,L)X*C16	FC64D	1.03	1.17	0.88
T*(8,L)X*C20	FC/MC62D	1.02	1.15	0.89
T*(8,L)X*C20	FC64D	1.02	1.18	0.86
T*9(C,V)*C16	FC/MC62D	1.00	1.06	0.94
T*9(C,V)*C16	FC64D	1.03	1.15	0.89
T*9(C,V)*C20	FC/MC62D	1.01	1.07	0.94
T*9(C,V)*C20	FC64D	1.01	1.08	0.93
T*9(C,V)*D20	FC/MC62D	1.00	1.06	0.94
T*9(C,V)*D20	FC64D	1.01	1.09	0.92
T*9X*C16	FC64D	1.03	1.17	0.88
T*9X*C20	FC/MC62D	1.01	1.13	0.89
T*9X*C20	FC64D	1.02	1.17	0.87
T*9X*D20	FC64D	1.03	1.16	0.89
Y*(8,L)C*C16	FC64D	1.03	1.16	0.89
Y*(8,L)C*C20	FC64D	1.03	1.17	0.88
Y*9C*C16	FC/MC62D	1.00	1.06	0.94
Y*9C*C16	FC64D	1.03	1.15	0.89
Y*9C*C20	FC/MC62D	1.01	1.07	0.94
Y*9C*C20	FC64D	1.01	1.08	0.93
Y*9C*D20	FC/MC62D	1.00	1.06	0.94
Y*9C*D20	FC64D	1.01	1.09	0.92

HEATING PERFORMANCE DATA - HIGH CFM 2-STAGE OPERATION										
OUTDOOR UNIT MODEL NO.		**YZF06013(C)**								
INDOOR COIL MODEL NO.		**FC/MC62**								
AIR TEMP. ENTERING OUTDOOR UNIT	**AIR TEMP. ENTERING INDOOR COIL**	ID CFM								
		1650			1850			2050		
		MBH	COP	KW	MBH	COP	KW	MBH	COP	KW
60	60	72.6	4.30	4.94	73.3	4.42	4.86	74.1	4.55	4.77
	70	71.1	3.82	5.45	72.0	3.94	5.36	72.9	4.07	5.25
	80	69.6	3.42	5.97	70.7	3.54	5.85	71.7	3.67	5.73
47	60	62.5	3.91	4.68	62.9	3.98	4.63	63.4	4.06	4.58
	70	61.4	3.46	5.20	61.9	3.54	5.12	62.4	3.62	5.05
	80	60.3	3.10	5.70	60.8	3.18	5.61	61.4	3.26	5.52
40	60	56.0	3.56	4.61	56.4	3.64	4.54	56.7	3.71	4.48
	70	55.1	3.17	5.09	55.4	3.23	5.03	55.8	3.30	4.95
	80	54.2	2.85	5.57	54.5	2.90	5.51	54.9	2.96	5.44
30	60	47.1	3.16	4.37	46.0	3.10	4.35	45.0	3.04	4.33
	70	47.6	2.87	4.86	47.2	2.86	4.83	46.7	2.85	4.80
	80	48.2	2.63	5.37	48.3	2.66	5.32	48.5	2.70	5.26
17	60	39.8	2.74	4.26	40.2	2.78	4.24	40.6	2.82	4.22
	70	37.9	2.37	4.69	37.8	2.40	4.62	37.7	2.42	4.57
	80	36.0	2.07	5.10	35.4	2.07	5.02	34.9	2.07	4.93
10	60	35.0	2.46	4.17	35.2	2.48	4.16	35.4	2.50	4.15
	70	34.7	2.23	4.57	34.9	2.25	4.55	35.1	2.28	4.51
	80	34.4	2.03	4.97	34.6	2.06	4.93	34.8	2.09	4.89
NOTE: ALL CAPACITIES ARE NET, WITH INDOOR FAN HEAT ALREADY DEDUCTED. KW VALUES ARE FOR THE SYSTEM (OUTDOOR + INDOOR).										

Multipliers for determining the performance with other indoor sections.

Air Handler	Coil	MBH	COP	KW
–	FC/MC62D	1.00	1.00	1.00
–	FC64	1.04	1.05	0.99
AHE60D	–	1.00	1.03	0.97
AHV60D	–	0.98	1.00	0.97
MV20D	FC/MC62D	0.98	1.00	0.98
MV20D	FC64	0.99	0.99	1.01
MX20D	FC/MC62D	1.01	0.99	1.02
MX20D	FC64	1.04	0.99	1.04

Furnace	Coil	MBH	COP	KW
T*(8,L)V*C20	FC/MC62D	0.99	1.02	0.97
T*(8,L)V*C20	FC64D	0.99	1.00	0.99
T*(8,L)X*C20	FC64D	0.99	0.98	1.01
T*9(C,V)*C20	FC/MC62D	1.00	1.05	0.95
T*9(C,V)*C20	FC64D	1.00	1.02	0.98
T*9(C,V)*D20	FC/MC62D	0.99	1.04	0.96
T*9(C,V)*D20	FC64D	1.00	1.02	0.98
T*9X*C20	FC/MC62D	0.98	1.02	0.97
T*9X*C20	FC64D	0.99	1.00	0.99
T*9X*D20	FC/MC62D	0.99	1.03	0.96
T*9X*D20	FC64D	0.99	1.00	0.99
Y*(8,L)C*C20	FC/MC62D	0.99	1.02	0.97
Y*(8,L)C*C20	FC64D	0.99	1.00	0.99
Y*9C*C20	FC/MC62D	1.00	1.05	0.95
Y*9C*C20	FC64D	1.00	1.02	0.98
Y*9C*D20	FC/MC62D	0.99	1.04	0.96
Y*9C*D20	FC64D	1.00	1.02	0.98

NOTES

Subject to change without notice. Published in U.S.A.
Copyright © 2013 by Johnson Controls, Inc. All rights reserved.

632151-YTG-E-0213
Supersedes: 632151-YTG-D-0512

York International Corp.
5005 York Drive
Norman, OK 73069