YORK®
Heating and Air Conditioning

TECHNICAL GUIDE

MODELS: MX

MODULAR STANDARD ECM AIR HANDLERS FOR USE WITH SPLIT SYSTEM COOLING & HEAT PUMP

1200 - 2000 CFM BLOWERS

3 - 5 TON COILS

OPTIONAL 1 & 3ϕ ELECTRIC HEATERS

AHRI CERTIFIED™ www.ahridirectory.org

C US

LIMITED WARRANTY TO CONSUMERS Good Housekeeping Promises REPLACEMENT OR REFUND IF DEFECTIVE

ISO 9000 REGISTRATION
ISO 9001
Certified Quality
Management System

Due to continuous product improvement, specifications are subject to change without notice.

Visit us on the web at:

www.york.com

Additional rating information can be found at:

www.ahridirectory.org

DESCRIPTION

This unique modular system allows the flexibility to handle any application. These versatile coils and blowers may be used for upflow, downflow, or horizontal left or right applications. They may be combined to function as a cooling only unit or with a heat pump including electric heat for 1 and 3 phase applications. The blower and electric heater could be used as stand alone electric furnaces.

FEATURES

Blowers - Models to match any air flow or voltage requirement. The compact size allows easy installation. Blowers are sized to deliver design air quantity both efficiently and quietly. All models use a high efficiency brushless DC motor to provide cooling SEER rating enhancement. The durable, pre-painted steel protects the unit against rust and corrosion. All models have 1 inch foil face fiber glass insulation, providing a thermal insulation value of R-4.2.

Coils - Staggered rows of rifled copper tubes are mechanically expanded into enhanced surface aluminum fins to provide high heat transfer and long-lasting quality. The MC multi-position coils may be used for upflow, downflow, and horizontal left or right applications. Coil cabinets are insulated with 3/4" foil face insulation to prevent sweating.

Thermal Expansion Valves - Coils are ordered as "Flex-coil" units without a factory installed metering device or with R-410A factory installed TXV's. Flex-coil models allow for field installed R-22 or R-410A TXV's for added flexibility to meet refrigerant system choice.

Electric Heaters - Both single and three phase electric heater models are available to match any requirement. All heaters include nickel-chromium elements with a 5-year limited warranty on single phase heating elements and 1 year limited warranty on 3 phase heating elements. Sequential operation is provided to control heaters in all models. Circuit breakers are used in 208/230 volt, single-phase heaters of 15 KW and larger.

Models equipped with circuit breakers may be altered in the field to use multi-source power supply. Over-temperature limit switches provide protection from airflow loss with fusible link backup protection.

Accessories - A full line of matching accessories available for use with the blower and coils to allow any type application.

LIMITATIONS

These units must be wired and installed in accordance with all national and local safety codes.

Voltage limits are as follows:

AIR HANDLER VOLTAGE	NORMAL OPERATING VOLTAGE RANGE*
208/230-1-60	187 - 253

* Rated in accordance with ARI Standard 110, utilization range "A".

Air flow must be within the minimum and maximum limits approved for electric heat, evaporator coils and outdoor units.

DIMENSIONS

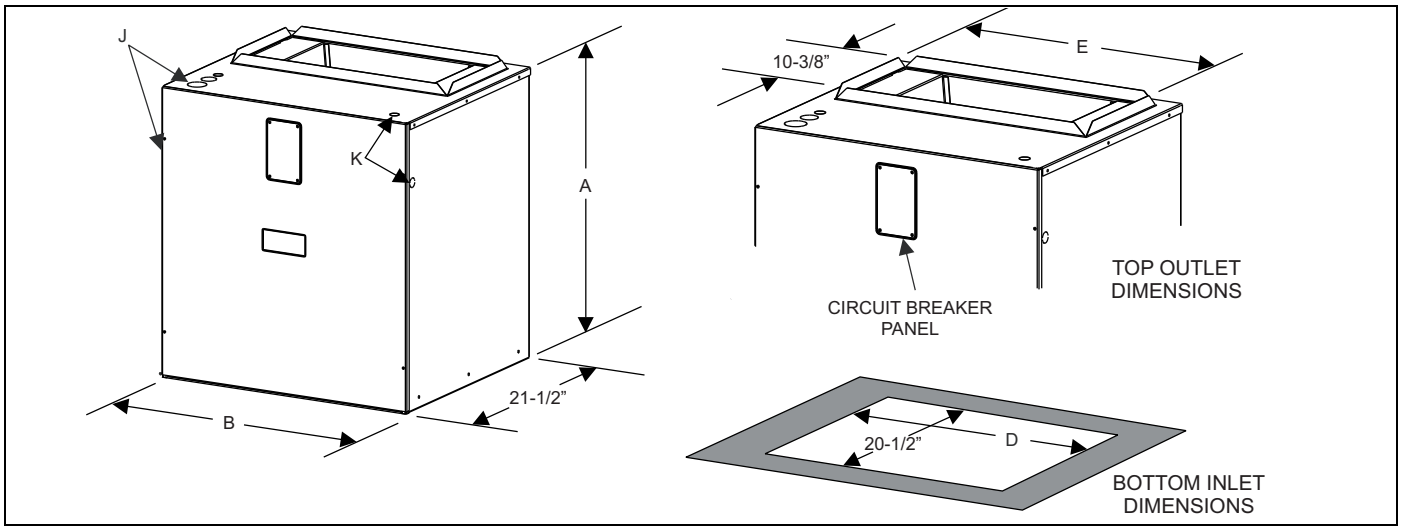

FIGURE 1: Dimensions & Duct Connection Dimensions

TABLE 1: Dimensions

Models	Dimensions				Wiring Knockouts[1]	
	A	B	D	E	J	K
	Height	Width			Power	Control
12B	25	17-1/2	16-1/2	14-19/32	7/8” (1/2”) 1 3/8” (1”) 1 23/32” (1 1/4”)	7/8” (1/2”)
12D		24-1/2	23-1/2	21-19/32		
16C		21	20	18-3/32		
20D		24-1/2	23-1/2	21-19/32		

1. Actual size (Conduit size).

COOLING CAPACITY - Coil Only

Blower Model	Coil Model	Rated CFM	Entering Air °F (Dry/Wet Bulb)	MBH @ Evaporator Temperature and Corresponding Pressure °F/PSIG			
				35/61.5	40/68.5	45/76.0	50/84.0
Multi-Position - Upflow/Downflow/Horizontal							
MX12B	MC30B**H	1,025	72	41.5	37.8	33.7	29.5
			67	36.2	32.4	28.6	24.5
			62	29.1	25.3	24.0	19.2
			57	24.1	21.5	18.7	15.8
	MC36B**H	1,250	72	52.0	47.3	42.3	37.3
			67	41.7	36.8	32.3	27.4
			62	32.5	27.3	29.8	22.2
			57	27.9	25.8	23.8	22.2
	MC43B**H	1,220	72	81.1	66.3	60.7	48.8
			67	65.7	57.0	47.1	37.0
			62	54.9	45.2	34.7	24.7
			57	42.2	37.4	31.9	26.9
MX12D	MC48D**H	1,125	72	46.8	42.4	37.6	33.0
			67	37.4	33.3	29.4	24.3
			62	28.9	24.6	21.7	19.6
			57	25.1	23.3	21.7	19.6
	MC60D**H	1,275	72	53.7	48.4	43.5	37.5
			67	43.0	38.0	33.3	27.7
			62	33.1	28.1	24.5	22.4
			57	28.8	26.5	24.5	22.4
	MC62D**H	1,450	72	91.7	78.4	68.1	52.3
			67	73.4	61.5	52.0	38.6
			62	57.3	45.6	38.4	31.2
			57	49.2	43.0	38.4	31.2
MX16C	MC43C**H	1,365	72	68.7	67.6	65.8	54.4
			67	67.0	62.7	51.4	39.9
			62	59.3	48.8	38.2	26.9
			57	46.5	41.1	35.4	29.8
	MC48C**H	1,650	72	100.5	86.4	72.0	56.8
			67	80.4	67.5	55.0	42.1
			62	62.7	49.9	40.7	34.0
			57	53.9	47.2	40.7	34.0
MX20D	MC48D**H	1,525	72	69.8	88.2	74.2	60.5
			67	83.5	71.6	58.6	44.4
			62	65.6	55.5	42.8	30.5
			57	52.2	46.6	39.8	33.5
	MC60D**H	1,780	72	110.4	98.3	82.4	66.1
			67	91.7	76.9	62.8	47.2
			62	72.2	58.3	44.2	29.7
			57	55.1	50.4	43.4	36.3
	MC62D**H	1,795	72	122.1	106.5	88.9	72.4
			67	98.2	84.0	67.9	51.6
			62	68.3	63.9	48.5	32.7
			57	59.6	53.2	45.6	38.4

Note: Airflow is calculated for each system tonnage. Capacity varies with O.D. product.

Physical and Electrical Data - Cooling Only (60 Hz)

Models		MX12BN21	MX12DN21	MX16CN21	MX20DN21
Blower - Diameter x Width		10 x 9	10 x 10	10 x 10	10 x 10
Motor	HP	1/3	1/3	1/2	3/4
	Nominal RPM	1050	1050	1050	1050
Voltage		230			
Amps	Full Load (230)	2.8	2.8	4.1	6.0
Permanent Filter[1]	Type	DISPOSABLE OR PERMANENT			
	Size	16 x 20 x1	24 x 20 x 1	20 x 20 x 1	24 x 20 x1
	Filter Bulk Pack	1PF0601BK	1PF0604BK	1PF0602BK	1PF0604BK
Shipping / Operating Weight (lbs.)		70 / 66	83 / 77	83 / 77	89 / 83

1. Field Supplied.

FULL CASED “A” TYPE MULTI-POSITION

Model	Application	Refrig. Conn. Types	Face Area (Sq. Ft.)	Rows Deep	Fin Per In.	Coil Size	Tube Geometry	Tube Dia.	Fin Type	TXV	Operating Weight (Lbs.)
MC30B3XC1	Cooling / Heat Pump	Sweat	4.38	2	14	(2) 18 x 17.5	1 x 0.866	3/8	Enhanced	None	54
MC36B3XC1	Cooling / Heat Pump	Sweat	4.86	2	14	(2) 20 x 17.5	1 x 0.866	3/8	Enhanced	None	65
MC43B3XC1	Cooling / Heat Pump	Sweat	4.86	3	12	(2) 20 x 17.5	1 x 0.866	3/8	Enhanced	None	73
MC43C3XC1	Cooling / Heat Pump	Sweat	4.86	3	12	(2) 20 x 17.5	1 x 0.866	3/8	Enhanced	None	75
MC48C3XC1	Cooling / Heat Pump	Sweat	5.35	3	12	(2) 22 x 17.5	1 x 0.866	3/8	Enhanced	None	82
MC48D3XC1	Cooling / Heat Pump	Sweat	5.35	3	12	(2) 22 x 17.5	1 x 0.866	3/8	Enhanced	None	82
MC60D3XC1	Cooling / Heat Pump	Sweat	5.83	3	12	(2) 24 x 17.5	1 x 0.866	3/8	Enhanced	None	86
MC62D3XC1	Cooling / Heat Pump	Sweat	6.80	3	12	(2) 28 x 17.5	1 x 0.866	3/8	Enhanced	None	98

Electrical Data - 1 Ø - 208/230-1-60

Models	Heater Models*	Max. Static	Min. Speed Tap	Total Heat[1]				kW Staging					
				kW		MBH		W1 Only		W2 Only		W1 & W2	
				208v	230v	208v	230v	208v	230v	208v	230v	208v	230v
MX12B	4HK*6500506	0.5	Med/#3	3.6	4.8	12.3	16.4	3.6	4.8	3.6	4.8	3.6	4.8
	4HK*6500806	0.5	Med/#3	5.6	7.5	19.2	25.6	2.8	3.75	5.6	7.5	5.6	7.5
	4HK*6501006	0.5	Med/#3	7.2	9.6	24.6	32.8	3.6	4.8	7.2	9.6	7.2	9.6
	4HK16501306	0.5	Med/#3	9.8	13	33.3	44.4	3.3	4.3	6.5	8.6	9.8	13
	4HK165N1506	0.5	Med/#3	10.8	14.4	36.9	49.1	3.6	4.8	7.2	9.6	10.8	14.4
MX12D	4HK*6500506	0.5	Med/#3	3.6	4.8	12.3	16.4	3.6	4.8	3.6	4.8	3.6	4.8
	4HK*6500806	0.5	Med/#3	5.6	7.5	19.2	25.6	2.8	3.75	5.6	7.5	5.6	7.5
	4HK*6501006	0.5	MedHi/#2	7.2	9.6	24.6	32.8	3.6	4.8	7.2	9.6	7.2	9.6
	4HK16501306	0.5	MedHi/#2	9.8	13	33.3	44.4	3.3	4.3	6.5	8.6	9.8	13
	4HK16501506	0.5	MedHi/#2	10.8	14.4	36.9	49.1	3.6	4.8	7.2	9.6	10.8	14.4
	4HK16501806	0.5	MedHi/#2	13.2	17.6	45.1	60.1	3.3	4.4	6.6	8.8	13.2	17.6
	4HK16502006	0.5	MedHi/#2	14.4	19.2	49.2	65.5	3.6	4.8	7.2	9.6	14.4	19.2
MX16C	4HK*6500506	0.5	Lo/#5	3.6	4.8	12.3	16.4	3.6	4.8	3.6	4.8	3.6	4.8
	4HK*6500806	0.5	Lo/#5	5.6	7.5	19.2	25.6	2.8	3.75	5.6	7.5	5.6	7.5
	4HK*6501006	0.5	MedLo/#4	7.2	9.6	24.6	32.8	3.6	4.8	7.2	9.6	7.2	9.6
	4HK16501306	0.5	MedLo/#4	9.8	13	33.3	44.4	3.3	4.3	6.5	8.6	9.8	13
	4HK16501506	0.5	MedLo/#4	10.8	14.4	36.9	49.1	3.6	4.8	7.2	9.6	10.8	14.4
	4HK16501806	0.5	Med/#3	13.2	17.6	45.1	60.1	3.3	4.4	6.6	8.8	13.2	17.6
	4HK16502006	0.5	Med/#3	14.4	19.2	49.2	65.5	3.6	4.8	7.2	9.6	14.4	19.2

Electrical Data - 1 Ø - 208/230-1-60

Models	Heater Models*	Max. Static	Min. Speed Tap	Total Heat[1]				kW Staging					
				kW		MBH		W1 Only		W2 Only		W1 & W2	
				208v	230v	208v	230v	208v	230v	208v	230v	208v	230v
MX20D	4HK*6500806	0.5	Lo/#5	5.6	7.5	19.2	25.6	2.8	3.75	5.6	7.5	5.6	7.5
	4HK*6501006	0.5	Lo/#5	7.2	9.6	24.6	32.8	3.6	4.8	7.2	9.6	7.2	9.6
	4HK16501306	0.5	Lo/#5	9.8	13	33.3	44.4	3.3	4.3	6.5	8.6	9.8	13
	4HK16501506	0.5	Lo/#5	10.8	14.4	36.9	49.1	3.6	4.8	7.2	9.6	10.8	14.4
	4HK16501806	0.5	Lo/#5	13.2	17.6	45.1	60.1	3.3	4.4	6.6	8.8	13.2	17.6
	4HK16502006	0.5	Lo/#5	14.4	19.2	49.2	65.5	3.6	4.8	7.2	9.6	14.4	19.2
	4HK16502506	0.5	Lo/#5	18	24	61.5	81.9	3.6	4.8	10.8	14.4	18	24

1. See conversion Table 10.

* May be 0 (no breaker) or 1 (with breaker).

Electrical Data - (For Single Source Power Supply) - Copper Wire 1 Ø - 208/230-1-60

Models	Heater Models*	Heater Amps 240V	Field Wiring					
			Min. Circuit Ampacity		Max. O.C.P. Amps/Type[1]		75°C Wire Size - AWG	
			208V	230V	208V	230V	208V	230V
MX12B	4HK*6500506	20	25.1	28.5	30	30	10	10
	4HK*6500806	31.3	37.1	42.6	40	45	8	8
	4HK*6501006	40	46.7	53.5	50	60	8	6
	4HK16501306	54.2	62.1	71.2	70	80	4	4
	4HK165N1506	60	68.4	78.5	80	90	4	3
MX12D	4HK*6500506	20	25.1	28.5	30	30	10	10
	4HK*6500806	31.3	37.1	42.6	40	45	8	8
	4HK*6501006	40	46.7	53.5	50	60	8	6
	4HK16501306	54.2	62.4	71.2	70	80	4	4
	4HK16501506	60	68.4	78.5	80	90	4	4
	4HK16501806	73.3	82.9	95.1	90	100	3	3
	4HK16502006	80	90	103.5	100	110	3	2
MX16C	4HK*6500506	20	26.8	30.1	30	35	10	10
	4HK*6500806	31.3	38.8	43.6	40	50	8	8
	4HK*6501006	40	48.4	54.5	50	60	8	6
	4HK16501306	54.2	64	72.8	70	80	4	4
	4HK16501506	60	70	79.5	80	90	4	4
	4HK16501806	73.3	84.5	96.1	90	100	3	3
	4HK16502006	80	91.6	104.5	100	110	3	2
MX20D	4HK*6500806	31.3	41.2	46.6	45	50	8	8
	4HK*6501006	40	50.8	57.5	60	60	8	6
	4HK16501306	54.2	66.4	75.2	70	80	4	4
	4HK16501506	60	72.4	82.5	80	90	4	4
	4HK16501806	73.3	86.9	99.1	90	110	3	3
	4HK16502006	80	94.1	107.5	100	110	3	2
	4HK16502506	100	115.7	132.5	125	150	1	1/0

1. O.C.P. = Over Current Protection device, must be HACR type Circuit Breaker or Time Delay fuse.

* May be 0 (no breaker) or 1 (with breaker).

Electrical Data - (For Multi-Source Power Supply) - Copper Wire 1 Ø - 208/230-1-60

Models	Heater Models	Min. Circuit Ampacity			Max. O.C.P. Amps/Type[1]			75°C Wire Size - AWG		
		Circuit			Circuit			Circuit		
		1st	2nd	3rd	1st	2nd	3rd	1st	2nd	3rd
		208/230	208/230	208/230	208/230	208/230	208/230	208/230	208/230	208/230
MX12B	4HK16501306	42.6/48.6	17.1/20.6	-/-	45/60	20/25	-/-	8/8	10/10	–
	4HK165N1506	46.7/53.5	19.2/23.1	-/-	50/60	25/25	-/-	8/6	10/10	–
MX12D	4HK16501306	40.8/47.1	21.6/24.1	-/-	50/50	25/25	-/-	8/8	10/10	–
	4HK16501506	46.7/53.5	19.2/23.1	-/-	50/60	25/25	-/-	8/6	10/10	–
	4HK16501806	43/49.4	37.1/44	-/-	50/60	40/50	-/-	8/6	8/8	–
	4HK16502006	46.7/53.5	40.9/48.1	-/-	50/60	45/50	-/-	8/6	8/8	–
MX16C	4HK16501306	41.6/47.9	22.4/25.0	-/-	50/50	25/30	-/-	8/8	10/8	–
	4HK16501506	48.4/55.1	19.1/23.2	-/-	50/60	25/25	-/-	8/6	10/10	–
	4HK16501806	44.6/50.3	37.0/44.1	-/-	50/60	40/50	-/-	8/6	8/8	–
	4HK16502006	48.4/54.5	40.8/48.2	-/-	50/60	45/50	-/-	6/6	8/6	–
MX20D	4HK16501306	42.9/49.1	23.6/26.2	-/-	50/50	25/30	-/-	8/8	10/8	–
	4HK16501506	50.8/57.5	19.4/23.7	-/-	60/60	25/25	-/-	8/6	10/10	–
	4HK16501806	47.1/53.3	37.3/44.6	-/-	50/60	40/50	-/-	8/6	8/8	–
	4HK16502006	50.8/57.5	41.1/48.7	-/-	60/60	45/50	-/-	6/6	8/6	–
	4HK16502506	50.8/57.5	41.1/48.7	19.4/23.7	60/60	45/50	25/25	6/6	8/6	10/10

1. O.C.P. = Over Current Protection device, must be HACR type Circuit Breaker or Time Delay fuse.

Electrical Data - 208/230-3-60

Models	Heat Kit - Three Phase	Max. Static	Min. Speed Tap	Total Heat[1]				KW Staging					
				KW		MBH		W1 Only		W2 Only		W1 + W2	
				208V	230V	208V	230V	208V	230V	208V	230V	208V	230V
MX12B	4HK06501025	0.5	Med/#3	7.2	9.6	24.6	32.8	7.2	9.6	7.2	9.6	7.2	9.6
	4HK065N1525	0.5	Med/#3	10.8	14.4	36.9	49.1	10.8	14.4	10.8	14.4	10.8	14.4
MX16C	4HK06501025	0.5	Lo/#5	7.2	9.6	24.6	32.8	7.2	9.6	7.2	9.6	7.2	9.6
	4HK06501525	0.5	Lo/#5	10.8	14.4	36.9	49.1	10.8	14.4	10.8	14.4	10.8	14.4
	4HK06501825	0.5	Lo/#5	12.9	17.2	44.7	58.7	12.9	17.2	12.9	17.2	12.9	17.2
MX20D	4HK06501025	0.5	Lo/#5	7.2	9.6	24.6	32.8	7.2	9.6	7.2	9.6	7.2	9.6
	4HK06501525	0.5	Lo/#5	10.8	14.4	36.9	49.1	10.8	14.4	10.8	14.4	10.8	14.4
	4HK16502525	0.5	Lo/#5	18	24	61.4	81.4	9	12	18	24	18	24

1. See conversion Table 10.

Electrical Data - (For Single Source Power Supply) - Copper Wire - 208/230-3-60

Models	Heat Kit - Three Phase	Heater Amps 240V	Field Wiring					
			Min. Circuit Ampacity		Max. O.C.P.[1] Amps/Type		75°C Wire Size - AWG	
			208V	230V	208V	230V	208V	230V
MX12B	4HK06501025	23.1	28.5	32.4	30	35	10	8
	4HK065N1525	34.7	41	46.9	45	50	8	8
MX16C	4HK06501025	23.1	30.1	33.3	35	35	10	8
	4HK06501525	34.7	42.6	47.8	45	50	8	8
	4HK06501825	41.4	49.9	56.2	60	60	8	6
MX20D	4HK06501025	23.1	32.6	36.3	40	40	10	8
	4HK06501525	34.7	45.4	50.8	50	60	8	8
	4HK06501825	34.7	70.1	79.7	80	90	8	6

1. O.C.P. = Over Current Protection device, must be HACR type Circuit Breaker or Time Delay fuse.
2. Heaters are 3 Phase.

Electrical Data - (For Multi-Source Power Supply) - Copper Wire - 208/230-3-60

Models	Heater Model	Minimum Circuit Ampacity			Max. O.C.P.[1] Amps/Type			75°C Wire Size - AWG		
		Circuit								
		1st	2nd	3rd	1st	2nd	3rd	1st	2nd	3rd
		208/230	208/230	208/230	208/230	208/230	208/230	208/230	208/230	208/230
MX20D	4HK16502525	45.1/50.8	22.8/27.6	–/–	45/50	20/20	–/–	8/6	10/10	–/–

1. O.C.P. = Over Current Protection device, must be HACR type Circuit Breaker or Time Delay fuse.

KW & MBH CONVERSIONS

FOR	208-VOLT	OPERATION MULTIPLY	240-VOLT	TABULATED KW & MBH BY	.751
	230-VOLT		240-VOLT		.918

Electrical Data - Cooling Only (60 Hz)

Models	Total Motor Amps		Minimum Circuit Ampacity		Max. O.C.P. Amps/Type[1]	Minimum Wire Size A.W.G.
	60 Hertz		60 Hertz			
	208V	230V	208V	230V		
12B	2.8	2.8	3.5	3.5	15	14
12D	2.8	2.8	3.5	3.5	15	14
16C	4.1	4.1	5.2	5.2	15	14
20D	6.0	6.0	7.5	7.5	15	14

1. OCP = Over Current Protection device, must be HACR type Circuit Breaker or Time Delay fuse.

POWER WIRING

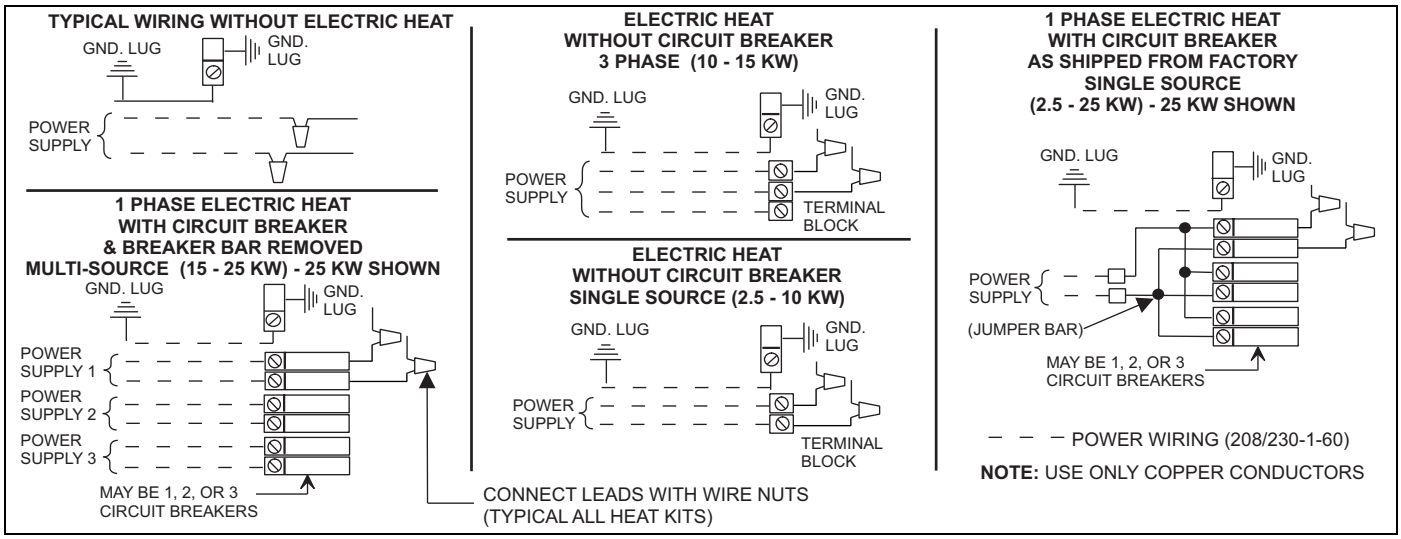

ACCESSORIES

Refer to Price Manual for specific model numbers.

Electric Heaters - Models shown under Electrical Data include sequencers and temperature limit switches and fusible links for safe, efficient operation. Circuit breakers are provided where shown.

Suspension Kit - Suspension Kit Model 1BH0601 is designed specifically for upflow application of the units contained in this technical guide. For suspension of these units in horizontal applications, it is recommended to use angle support brackets with threaded rods at locations shown in air handler installation instructions.

Filter Rack - External filter rack accessories 1FR08* must be used when unit is installed for application outlined.

Combustible Floor Base - If an electric heat accessory which is rated for greater than zero clearance to combustible surfaces is installed in these air handlers in the downflow operating positions on a combustible floor, one of the following combustible floor base accessories is required: 1FB1817, 1FB1821, or 1FB1824.

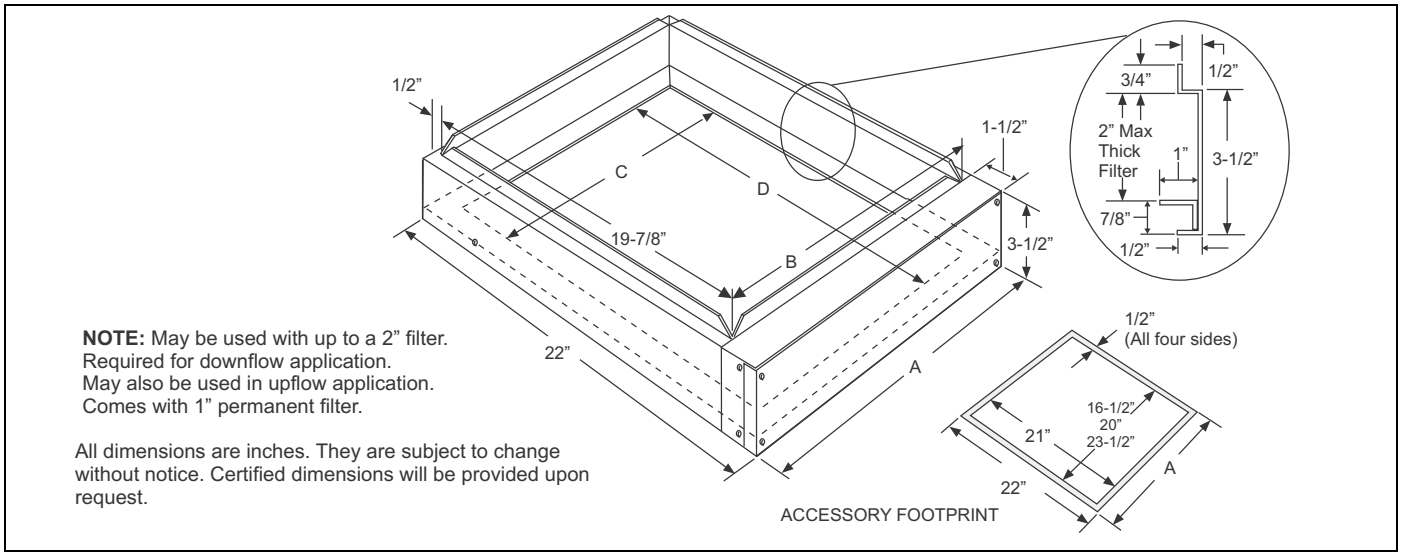

FILTER RACK ACCESSORY

DIMENSIONS

Filter Rack Model Multi-Position	Used With	Rack Dimensions Inches				Filter Dimensions Inches		
		A	B	C	D	Width	Length	Thickness
1FR0817	MX12B	17-1/2	16-3/8	15-1/2	21	16	20	1
1FR0821	MX16C	21	19-7/8	19	21	20	20	1
1FR0824	MX12D, MX20D	24-1/2	23-3/8	22-1/2	21	24	20	1

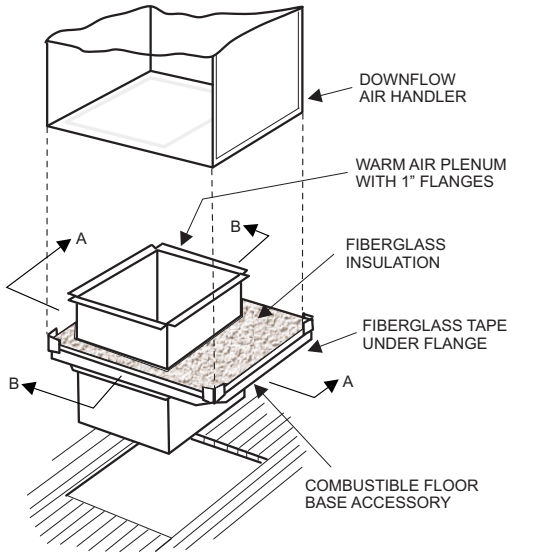

All dimensions are in inches. They are subject to change without notice.
Certified dimensions will be provided upon request.

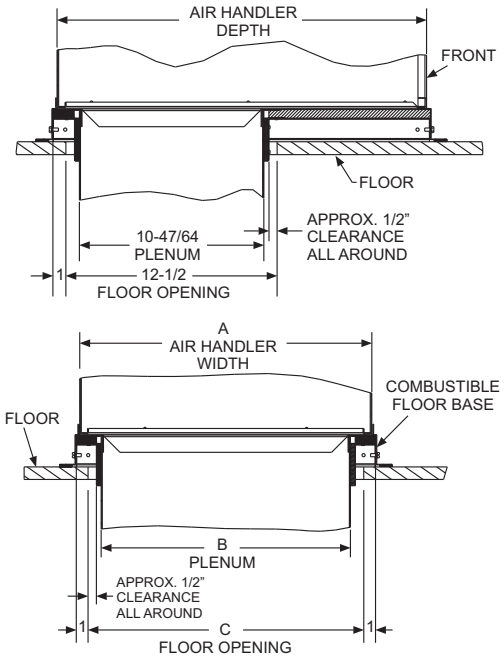

COMBUSTIBLE FLOOR BASE ACCESSORY

DIMENSIONS

Floor Base Model	Used with	Dimensions			
		A	B	C	D
1FB1817	MX12B	19.9	18.0	14.9	16.9
1FB1821	MX16C	23.4	21.5	18.4	20.4
1FB1824	MX12D, MX20D	26.9	25.0	21.9	23.9

APPLICATION FACTORS - Rated CFM vs. Actual CFM

% OF RATED AIR FLOW	80%	90%	RATED CFM	110%	120%
CAPACITY FACTOR	0.96	0.98	1.00	1.02	1.03

TYPICAL APPLICATIONS WITH MC MULTI-POSITION COILS

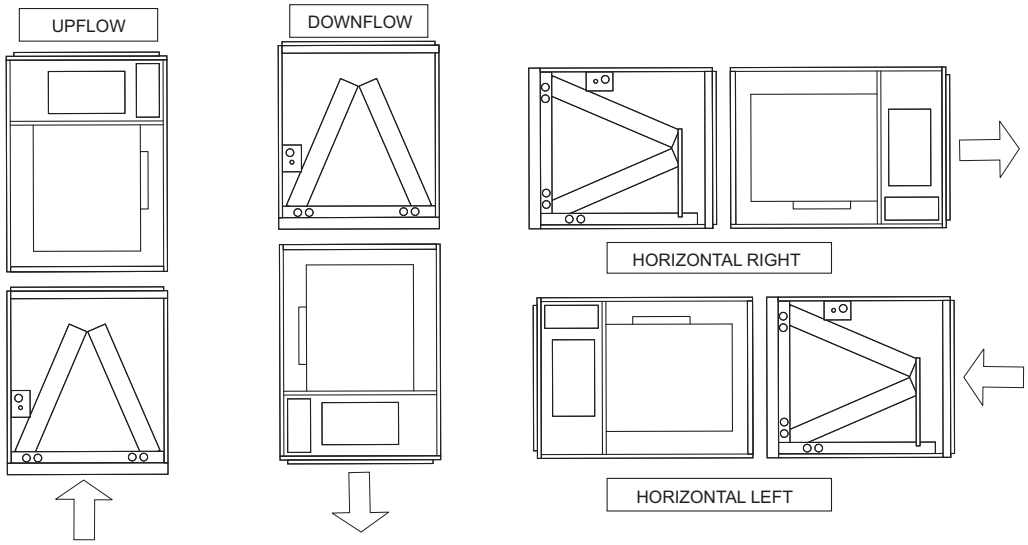

CONVENTIONAL CONTROL WIRING (24 VAC)

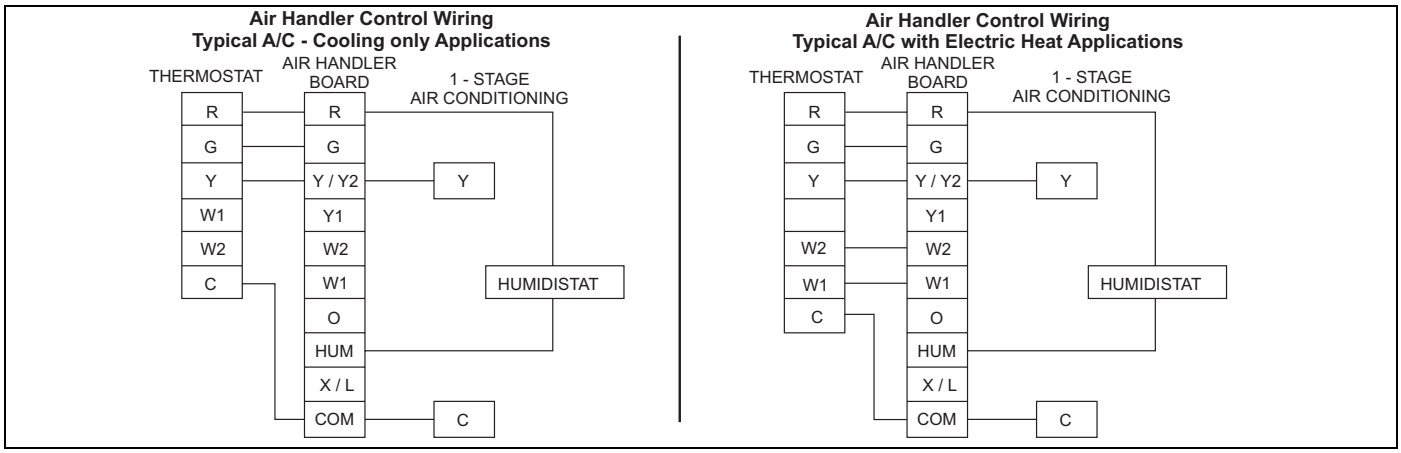

FIGURE 2: COOLING MODELS WITH ELECTIC HEAT WIRING

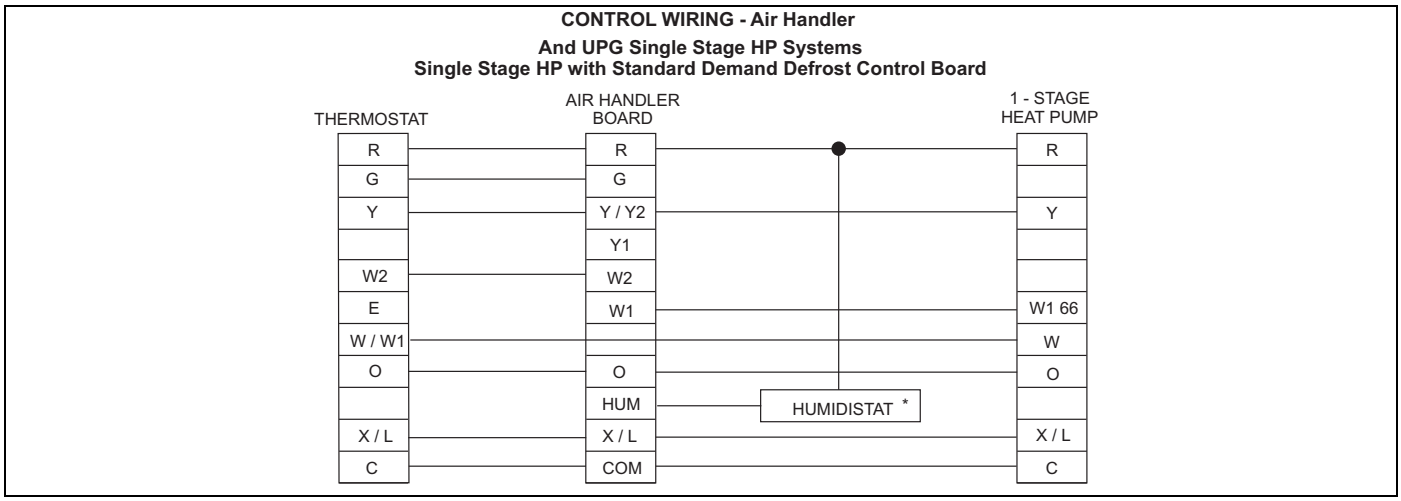

FIGURE 3: SINGLE-STAGE HEAT PUMP WIRING

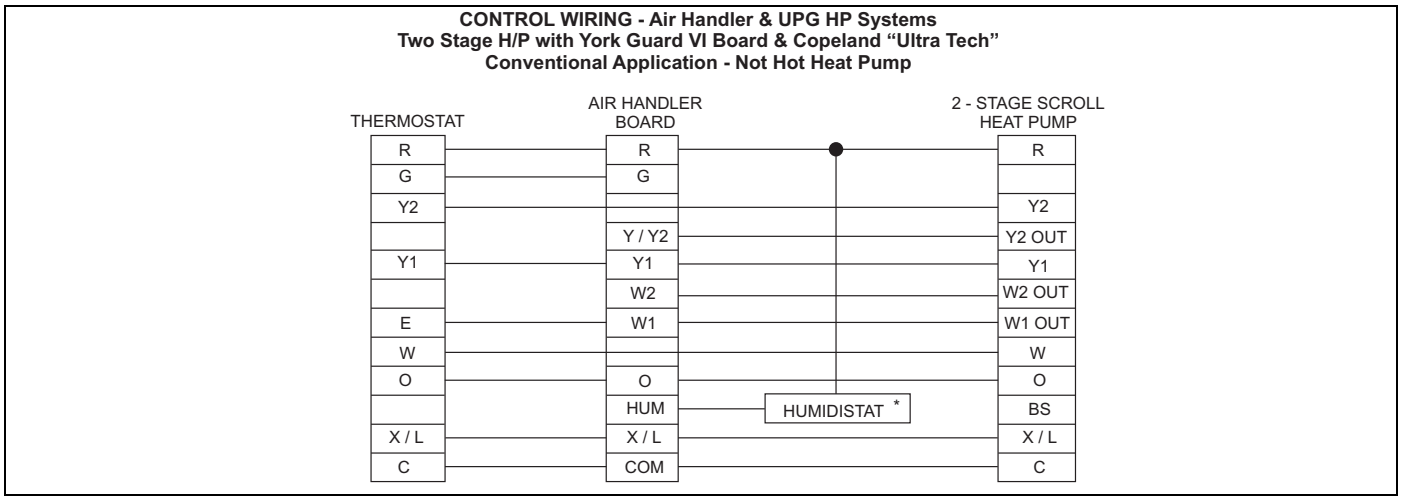

FIGURE 4: TWO-STAGE HEAT PUMP WIRING

* Optional dehumidification humidistat switch contacts open on rise.

Notes:

1. "Y/Y2" Terminal on air handler control board must be connected for full CFM and applications requiring 60 second blower off delay for SEER enhancement.
2. Remove humidistat jumper on air handler control board.
3. For heat pump applications - set MODE jumper on air handler control board to the HP position.
4. To change quantity of heat during HP defrost cycle - reverse connections at W1 and W2 on air handler control board.

Air Flow Data - 60 Hz Models

208 Volt																					
Models	Blower Motor Speed	CFM[1] @ External Static Pressure - IWC										m³/min @ External Static Pressure - Pascal									
		0.10	0.20	0.30	0.40	0.50	0.60	0.70	0.80	0.90	1.00	0.025	0.050	0.075	0.100	0.125	0.150	0.175	0.200	0.225	0.250
MX12B	Hi/#1	1234	1212	1178	1145	1079	1043	995	911	623	371	34.54	33.94	33.00	32.05	30.20	29.20	27.87	25.50	17.44	10.40
	MedHi/#2	1099	1066	1037	987	933	888	801	NA	NA	NA	30.76	29.86	29.03	27.65	26.13	24.86	22.43	NA	NA	NA
	Med/#3	928	892	840	768	731	664	566	523	476	226	25.99	24.98	23.53	21.52	20.48	18.60	15.84	14.64	13.33	6.32
	MedLo/#4	859	705	612	502	472	403	328	NA	NA	NA	24.06	19.75	17.12	14.06	13.21	11.28	9.19	NA	NA	NA
	Lo/#5	835	635	451	396	315	NA	NA	NA	NA	NA	23.37	17.79	12.62	11.08	8.83	NA	NA	NA	NA	NA
MX12D	Hi/#1	1510	1366	1307	1234	1176	1116	1051	917	834	696	42.27	38.25	36.60	34.54	32.93	31.24	29.44	25.69	23.34	19.48
	MedHi/#2	1421	1224	1120	1051	988	914	780	740	669	583	39.77	34.28	31.36	29.43	27.65	25.60	21.84	20.72	18.73	16.31
	Med/#3	1345	1124	889	812	675	615	568	501	424	384	37.65	31.48	24.90	22.74	18.90	17.22	15.89	14.03	11.87	10.75
	MedLo/#4	1272	1034	616	518	454	351	313	271	250	210	35.61	28.95	17.23	14.52	12.71	9.84	8.76	7.57	6.99	5.88
	Lo/#5	1219	928	451	349	287	244	212	110	NA	NA	34.12	25.98	12.62	9.77	8.05	6.83	5.93	3.08	NA	NA
MX16C	Hi/#1	1805	1771	1737	1696	1652	1587	1531	1469	1371	924	50.54	49.60	48.64	47.48	46.27	44.43	42.86	41.14	38.37	25.87
	MedHi/#2	1637	1589	1558	1512	1455	1397	1343	1291	1194	853	45.83	44.48	43.63	42.34	40.73	39.11	37.59	36.14	33.44	23.87
	Med/#3	1470	1424	1381	1327	1266	1211	1154	1068	1005	760	41.16	39.87	38.67	37.14	35.44	33.91	32.30	29.90	28.13	21.29
	MedLo/#4	1327	1237	1171	1109	1049	976	875	807	720	658	37.15	34.63	32.79	31.06	29.37	27.34	24.49	22.59	20.16	18.42
	Lo/#5	1279	1063	992	935	858	762	667	587	508	428	35.82	29.76	27.78	26.19	24.03	21.33	18.68	16.44	14.23	11.98
MX20D	Hi/#1	2075	2031	1996	1957	1912	1862	1813	1762	1693	1524	58.11	56.88	55.90	54.80	53.53	52.14	50.76	49.33	47.42	42.66
	MedHi/#2	1896	1849	1808	1766	1720	1679	1636	1585	1532	1461	53.10	51.77	50.63	49.46	48.16	47.02	45.80	44.38	42.89	40.90
	Med/#3	1685	1638	1587	1539	1489	1444	1398	1349	1294	1248	47.19	45.86	44.44	43.10	41.69	40.44	39.14	37.76	36.23	34.95
	MedLo/#4	1527	1481	1425	1370	1323	1277	1227	1166	1118	1065	42.77	41.48	39.90	38.36	37.04	35.75	34.35	32.64	31.32	29.82
	Lo/#5	1465	1301	1244	1177	1119	1065	998	927	833	795	41.03	36.42	34.84	32.96	31.33	29.81	27.93	25.96	23.31	22.26

230 Volt																					
Models	Blower Motor Speed	CFM[2] @ External Static Pressure - IWC										m³/min @ External Static Pressure - Pascal									
		0.10	0.20	0.30	0.40	0.50	0.60	0.70	0.80	0.90	1.00	0.025	0.050	0.075	0.100	0.125	0.150	0.175	0.200	0.225	0.250
MX12B	Hi/#1	1264	1241	1209	1184	1132	1067	1037	988	821	493	35.40	34.74	33.87	33.16	31.70	29.87	29.04	27.66	22.98	13.81
	MedHi/#2	1107	1073	1048	997	948	902	855	778	586	370	30.98	30.05	29.34	27.93	26.55	25.25	23.93	21.79	16.41	10.36
	Med/#3	937	904	861	807	736	682	582	557	501	357	26.24	25.32	24.10	22.59	20.62	19.09	16.31	15.59	14.04	10.01
	MedLo/#4	875	688	629	559	465	418	348	377	NA	NA	24.51	19.25	17.62	15.66	13.03	11.70	9.75	10.54	NA	NA
	Lo/#5	839	549	466	404	328	285	205	181	154	NA	23.49	15.38	13.06	11.33	9.19	7.97	5.75	5.08	4.30	NA
MX12D	Hi/#1	1485	1362	1304	1248	1180	1130	1065	985	863	708	41.59	38.13	36.52	34.95	33.05	31.63	29.83	27.58	24.18	19.83
	MedHi/#2	1408	1198	1119	1054	989	911	801	746	701	618	39.43	33.54	31.34	29.50	27.70	25.52	22.42	20.88	19.63	17.31
	Med/#3	1348	1115	888	817	676	635	577	528	447	407	37.74	31.23	24.86	22.89	18.93	17.78	16.15	14.78	12.51	11.39
	MedLo/#4	1278	1019	580	518	454	363	318	284	262	225	35.78	28.52	16.23	14.51	12.71	10.18	8.89	7.95	7.35	6.30
	Lo/#5	1240	964	441	352	294	252	214	187	NA	NA	34.72	27.00	12.34	9.87	8.23	7.05	6.00	5.24	NA	NA
MX16C	Hi/#1	1869	1833	1804	1772	1728	1674	1623	1554	1150	383	52.33	51.33	50.50	49.63	48.38	46.89	45.43	43.51	32.19	10.72
	MedHi/#2	1695	1653	1627	1576	1527	1477	1419	1370	751	NA	47.45	46.29	45.56	44.13	42.75	41.37	39.73	38.35	21.02	NA
	Med/#3	1546	1513	1468	1417	1361	1310	1253	1120	892	387	43.29	42.36	41.10	39.67	38.10	36.67	35.10	31.36	24.97	10.84
	MedLo/#4	1327	1283	1223	1163	1105	1036	857	768	614	384	37.16	35.93	34.24	32.56	30.93	29.00	24.00	21.50	17.20	10.76
	Lo/#5	1241	1103	1037	968	891	759	629	581	523	381	34.74	30.88	29.03	27.11	24.95	21.24	17.61	16.28	14.66	10.67
MX20D	Hi/#1	2085	2046	2008	1976	1935	1879	1836	1797	1724	1559	58.37	57.28	56.21	55.32	54.19	52.62	51.41	50.32	48.26	43.66
	MedHi/#2	1917	1868	1829	1792	1731	1702	1655	1615	1568	1485	53.68	52.30	51.20	50.16	48.47	47.66	46.33	45.22	43.91	41.58
	Med/#3	1678	1645	1601	1556	1502	1461	1406	1362	1319	1280	46.98	46.07	44.82	43.57	42.04	40.90	39.36	38.14	36.94	35.84
	MedLo/#4	1534	1494	1435	1384	1344	1289	1236	1192	1142	1086	42.97	41.82	40.18	38.75	37.62	36.08	34.62	33.39	31.97	30.41
	Lo/#5	1410	1259	1211	1148	1095	1038	996	940	840	800	39.47	35.24	33.90	32.13	30.65	29.06	27.90	26.32	23.53	22.40

NOTE: Air flow data shown above 1/2” w.c. external static pressure is for REFERENCE ONLY. Maximum allowable external static when electric heat is used is limited to 1/2” w.c. Maximum allowable external static pressure may also be limited by minimum CFM requirements for proper Heat Pump operation.

1. Dry coil conditions only, tested without filters.

† Speed temp High #1 not recommended for the unit.

Air handler units are UL Listed up to 0.5" w.c. external static pressure, including air filter, wet coil, and largest kW size heater, unless otherwise noted.

NOTES

Subject to change without notice. Published in U.S.A.
Copyright © 2012 by Johnson Controls, Inc. All rights reserved.

635425-YTG-C-1212
Supersedes: 635425-YTG-B-1211

York Internation Corp.
5005 York Drive
Norman, OK 73069