YORK®
Heating and Air Conditioning

TECHNICAL GUIDE

SINGLE PIECE STANDARD ECM AIR HANDLERS

FOR USE WITH SPLIT-SYSTEM COOLING & HEAT PUMPS

MODELS: AHE18 THRU 60*

AHRI CERTIFIED™ www.ahridirectory.org

C US

LIMITED WARRANTY TO CONSUMERS Good Housekeeping Promises REPLACEMENT OR REFUND IF DEFECTIVE

ISO 9000 REGISTRATION
ISO 9001
Certified Quality
Management System

Due to continuous product improvement,
specifications are subject to change without notice.

Visit us on the web at:

www.york.com

Additional rating information can be found at:

www.ahridirectory.org

WARRANTY

Standard 5-year limited parts warranty.

Extended 10-year limited parts warranty when product is registered online within 90 days of purchase for replacement or closing for new home construction.

DESCRIPTION

The AHE Air Handler line offers the ultimate in comfort, sound and application flexibility. This unit may be used for upflow, downflow, horizontal right, or horizontal left applications. No special kits are required to install this deluxe product.

All JCI Unitary Products air handlers and coils use a TXV to provide our customers with the optimum performance and refrigerant control. Air handlers are shipped with “Flex-coils” without a factory installed metering device. For added flexibility, an R-22 or R-410A TXV or orifice can be field installed to meet your refrigerant choice.

FEATURE

Thermal Expansion Valve - Provides the ultimate refrigerant control required for today’s high efficient product. The UPG bolt-on TXV provides easy installation to convert the air handler to the required refrigerant, which is a true bolt-on design that does not require brazing to replace or install.

Insulated Cabinet - All air handler cabinets are thermally insulated with 3/4” foil faced insulation to prevent sweating.

Factory Sealed - Achieves 2% or less total airflow leakage rate at duct blaster field test conditions for system airflow verification.

Durable Finish Inside and Out - Air handler casings are made of pre-painted galvanized steel which provides a better paint to steel bond that resists corrosion and rust creep. All internal coil sheet metal parts are made of G60 galvanized or prepainted G30 galvanized.

Filters - All models have internal filter racks provided for use with 1” thick standard size filters.

Electric Heat Kits - New 6HK series of field installed electric heat kits are available for installation friendly and easy service applications. These 6HK kits are unique to these new models.

High Efficiency Blowers - All models use high efficiency brushless DC motors to provide cooling SEER rating enhancement.

DIMENSIONS & DUCT CONNECTION DIMENSIONS

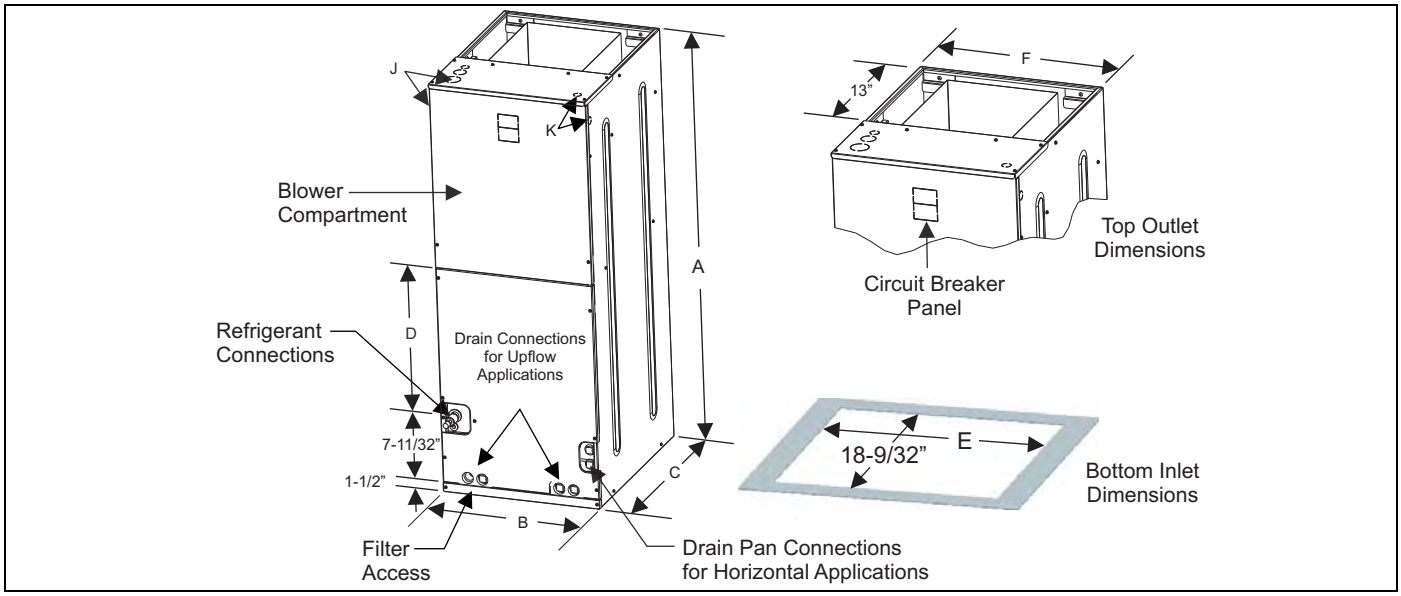

Dimensions[1]

Models	Dimensions						Wiring Knockouts[2]		Refrigerant Connections Line Size	
	A	B	C	D	E	F	J	K		
	Height	Width	Depth				Power	Control	Liquid	Vapor
AHE18B/AHE22B/AHE24B/ AHE30B	46	17 1/2	21 1/2	16 1/2	13-29/32	16 1/2	7/8 (1/2) 1-3/8(1) 1-23/32 (1-1/4)	7/8 (1/2)	3/8	3/4
AHE34C/AHE36C	52	21		21 1/2	17-13/32	20				
AHE42D/AHE48D/AHE60D	57	24 1/2		26	20-29/32	23-1/2				7/8

1. All dimensions are in inches.
2. Actual size (conduit size).

COIL TECHNICAL DATA

Models	Application	Refrig. Conn. Types	Face Area (Sq. Ft.)	Rows Deep	Fins Per In.	Coil Size	Tube Geometry	Tube Dia.	Fin Type
AHE18B3XH21	Cooling / Heat Pump	Sweat	3.4	2	14	(2) 14 x 17.5	1 x 0.866	3/8	Enhanced
AHE22B3XH21	Cooling / Heat Pump	Sweat	3.9	2	14	(2) 16 x 17.5	1 x 0.866	3/8	Enhanced
AHE24B3XH21	Cooling / Heat Pump	Sweat	3.9	3	12	(2) 16 x 17.5	1 x 0.866	3/8	Enhanced
AHE30B3XH21	Cooling / Heat Pump	Sweat	3.9	3	12	(2) 16 x 17.5	1 x 0.866	3/8	Enhanced
AHE34C3XH21	Cooling / Heat Pump	Sweat	3.9	3	12	(2) 16 x 17.5	1 x 0.866	3/8	Enhanced
AHE36C3XH21	Cooling / Heat Pump	Sweat	4.9	3	12	(2) 20 x 17.5	1 x 0.866	3/8	Enhanced
AHE42D3XH21	Cooling / Heat Pump	Sweat	5.4	3	12	(2) 22 x 17.5	1 x 0.866	3/8	Enhanced
AHE48D3XH21	Cooling / Heat Pump	Sweat	5.8	3	11	(2) 24 x 17.5	1 x 0.866	3/8	Enhanced
AHE60D3XH21	Cooling / Heat Pump	Sweat	6.8	3	12	(2) 28 x 17.5	1 x 0.866	3/8	Enhanced

COOLING CAPACITY[1]

Models	Rated CFM[2]	Entering Air Dry/Wet Bulb (°F)	MBH@ Evap. Temp. and Corresponding R-410A Pressure (°F/PSIG)			
			35/107.9	40/118.9	45/130.7	50/143.3
AHE18B	610	85/72	37.9	33.7	28.3	23.3
		80/67	31.8	27	22.5	17.6
		75/62	26.4	21.5	16.7	11.6
		70/57	20.7	18.4	15.8	13.5
	850	85/72	49.7	43.2	36.9	28.4
		80/67	42.1	35.1	28.8	22.5
		75/62	33.7	28	21.4	14.7
		70/57	26.5	23.8	20.3	16.9
AHE22B	585	85/72	37.9	33.8	29	24.4
		80/67	31.7	27.7	23	22.8
		75/62	26.4	22.1	19.5	15.8
		70/57	20.2	18.4	16	13.5
	795	85/72	47.7	42.6	35.3	30.3
		80/67	40.1	34.7	28.9	22.8
		75/62	32.7	27.1	24.7	19.1
		70/57	25.7	23.5	20.5	17.1
	985	85/72	55.5	47.5	41.6	34.4
		80/67	45.8	40.1	32.5	22.8
		75/62	38.1	31.7	28.2	23.2
		70/57	29.9	27.8	23.9	20.3
AHE24B	585	85/72	38.7	34.4	30.1	24.7
		80/67	33.6	28.9	23.9	18.9
		75/62	27.2	22.7	17.8	12.8
		70/57	21.2	18.6	16.2	13.7
	795	85/72	50.8	45.2	38.4	32.0
		80/67	43.7	36.8	31	24.0
		75/62	35.7	29.5	23.1	16.1
		70/57	27.9	24.5	21	17.6
	985	85/72	64.9	54	45.6	37.8
		80/67	52.3	44.6	36.9	28.4
		75/62	42.2	35.2	26.8	19.3
		70/57	33.6	29.6	25.4	21.4
AHE30B	585	85/72	38.7	34.4	30.1	24.7
		80/67	33.6	28.9	23.9	18.9
		75/62	27.2	22.7	17.8	12.8
		70/57	21.2	18.6	16.2	13.7
	795	85/72	50.8	45.2	38.4	32.0
		80/67	43.7	36.8	31	24.0
		75/62	35.7	29.5	23.1	16.1
		70/57	27.9	24.5	21	17.6
	985	85/72	64.9	54	45.6	37.8
		80/67	52.3	44.6	36.9	28.4
		75/62	42.2	35.2	26.8	19.3
		70/57	33.6	29.6	25.4	21.4
AHE34C	730	85/72	49.4	44	37.6	31.3
		80/67	42	36.4	29.5	22.9
		75/62	34	28.4	25.1	20.2
		70/57	26.6	23.9	20.7	17.5
	855	85/72	55.5	50.4	42.1	35.2
		80/67	48	40.3	33.3	26.4
		75/62	38.8	32.5	28.6	23.1
		70/57	30.6	28	23.8	19.9
	1000	85/72	63.3	56.3	48.3	40.1
		80/67	54.2	46.4	38.3	29.8
		75/62	43.8	36.3	32.9	26.4
		70/57	34.4	31.7	27.4	23.0
	1190	85/72	71.3	63.5	55.1	44.8
		80/67	61.3	53.1	43.5	33.7
		75/62	49.8	40.3	37.5	30.2
		70/57	38.8	36.5	31.5	26.7

Continuation and notes on next page.

COOLING CAPACITY[1] (Continued)

Models	Rated CFM[2]	Entering Air Dry/Wet Bulb (°F)	MBH@ Evap. Temp. and Corresponding R-410A Pressure (°F/PSIG)			
			35/107.9	40/118.9	45/130.7	50/143.3
AHE36C	730	85/72	49.3	45.2	38.3	31.4
		80/67	43	37.3	31	24.0
		75/62	34.7	28.8	22.8	16.2
		70/57	26.8	23.4	20.4	16.9
	855	85/72	59.1	51	44.1	36.5
		80/67	49.3	42.4	35.4	27.6
		75/62	39.9	33.1	26.1	18.2
		70/57	31.1	26.9	23.5	19.7
	1000	85/72	65.2	59.5	51.2	41.3
		80/67	56.4	48.3	39.9	31.3
		75/62	45.8	38.1	29.7	20.8
		70/57	35.7	31.2	26.9	22.6
	1190	85/72	67.5	65.9	59.8	48.7
		80/67	64.9	56.7	46.2	35.7
		75/62	53.5	43.2	34.1	24.0
		70/57	41.4	36.6	31.5	26.2
AHE42D	820	85/72	56.6	51.1	42.8	35.6
		80/67	48.6	41.1	34.8	27.6
		75/62	39.4	33	26	18.3
		70/57	30.5	26.6	23.1	19.6
	1000	85/72	65.7	61	52.7	42.9
		80/67	58	49.6	41.1	32.1
		75/62	46.7	38.9	30.4	21.8
		70/57	36.4	31.6	27.6	23.3
	1180	85/72	67.9	71.4	60.2	48.8
		80/67	65.6	56.9	47.1	37.1
		75/62	53.8	45.2	34.7	24.6
		70/57	42.2	37.1	31.9	27.0
	1385	85/72	69.4	81	68	57.2
		80/67	77.1	65.4	54.1	41.6
		75/62	62.1	51	39.8	28.1
		70/57	48.1	42.5	36.8	30.6
AHE48D	1000	85/72	69	59.8	51.3	41.5
		80/67	56.5	48.2	39.7	29.9
		75/62	45.1	36.8	28.3	18.9
		70/57	34.4	31	26.8	22.5
	1195	85/72	79.5	69.7	59.9	48.6
		80/67	65.2	55.5	45.5	34.9
		75/62	52.2	42.5	32.6	21.8
		70/57	40.1	36.1	31.1	26.2
	1385	85/72	90	78.1	66	54.5
		80/67	73.5	62.7	51.3	38.7
		75/62	59.2	48.2	36.9	24.0
		70/57	45.2	41	35.4	29.7
	1600	85/72	102.2	90	74.3	60.4
		80/67	83.6	70.6	57.2	43.1
		75/62	66.1	54	41.2	27.0
		70/57	50.7	46.1	39.8	33.4
AHE60D	1190	85/72	83.6	73.7	62.9	51.6
		80/67	68.2	58.4	48.4	37.1
		75/62	54.9	45.3	34.8	23.9
		70/57	42.2	37.3	31.9	26.9
	1390	85/72	95.9	84.1	71.9	58.8
		80/67	79.2	67.4	54.4	41.6
		75/62	62.4	51.2	39.7	26.9
		70/57	48	42.5	36.8	30.6
	1565	85/72	106.3	94.2	78.5	63.5
		80/67	87.6	73.9	60.2	45.9
		75/62	69.3	56.8	43.5	29.7
		70/57	53.1	46.9	40.5	34.1
	1835	85/72	122.1	107.1	90.9	72.6
		80/67	100.2	85.9	69.8	51.8
		75/62	79.7	65.3	49.8	32.9
		70/57	60.8	54.1	46.4	38.7

1. Actual capacity varies with the outdoor AC or HP that is used with the system.
2. Airflow is calculated for each system tonnage.

APPLICATION FACTORS - RATED CFM VS. ACTUAL CFM

% Of Rated Airflow (CFM)	80%	90%	100%	110%	120%
Capacity Factor	0.96	0.98	1.00	1.02	1.03

PHYSICAL & ELECTRICAL DATA - COOLING ONLY

Models		AHE18B	AHE22B	AHE24B	AHE30B	AHE34C	AHE36C	AHE42D	AHE48D	AHE60D
Blower - Diameter x Width		10 x 8	10 x 8	10 x 8	10 x 8	11 x 10	11 x 10	11 x 10	11 x 10	11 x 10
Motor	HP	1/3 HP	1/3 HP	1/3 HP	1/3 HP	1/2 HP	1/2 HP	1/2 HP	3/4 HP	3/4 HP
	Nominal RPM	1050	1050	1050	1050	1050	1050	1050	1050	1050
Voltage		208/230	208/230	208/230	208/230	208/230	208/230	208/230	208/230	208/230
Full Load Amps @230V		2.8	2.8	2.8	2.8	4.1	4.1	4.1	6.0	6.0
Filter[1]	Type	DISPOSABLE OR PERMANENT								
	Size	16 x 20 x 1	16 x 20 x 1	16 x 20 x 1	16 x 20 x 1	20 x 20 x 1	20 x 20 x 1	22 x 20 x 1	22 x 20 x 1	22 x 20 x 1
	Permanent Type Kit	1PF0601BK	1PF0601BK	1PF0601BK	1PF0601BK	1PF0602BK	1PF0602BK	1PF0603BK	1PF0603BK	1PF0603BK
Shipping / Operating Weight (lbs.)		115/103	120/105	120/105	120/105	152/137	152/137	168/150	171/153	174/156

1. Field supplied.

KW & MBH CONVERSIONS - FOR TOTAL POWER INPUT REQUIREMENT

For a power distribution voltage that is different than the provided nominal voltage, multiply the kW and MBH data from the table by the conversion factor in the following table.

DISTRIBUTION POWER	NOMINAL VOLTAGE	CONVERSION FACTOR
220V	240V	0.84

ELECTRICAL DATA - COOLING ONLY

Models	**Motor FLA[1]**	**Minimum Circuit Ampacity**	**MOP[2]**	**Minimum Wire Size (AWG)[3]**
AHE18B / AHE22B / AHE24B / AHE30B	2.8	3.5	15	14
AHE34C / AHE36C / AHE42D	4.1	5.1	15	14
AHE48D / AHE60D	6.0	7.5	15	14

1. FLA = Full Load Amps
2. MOP = Maximum Overcurrent Protection device; must be HACR type circuit breaker or time delay fuse.
3. 75°C, copper wire only. If wire other than non-plated, 75°C ambient, copper wire is used, consult applicable tables of the NEC and local codes..

ELECTRICAL HEAT: MINIMUM FAN SPEED[1]

Heater Kit Models[2,3]	**Nom. kW @240V**	**Air Handler Models**						
		AHE18B	**AHE22B AHE24B**	**AHE30B**	**AHE34C AHE36C**	**AHE42D**	**AHE48D**	**AHE60D**
6HK(0,1)6500206	2.4kW	Med Low #2	Med Low #2	Low #1	Med #3	Low #1	Med Low #2	Med Low #2
6HK(0,1)6500506	4.8kW	Med Low #2	Med Low #2	Med Low #2	Med Low #2	Med #3	Med #3	Med Low #2
6HK(0,1)6500806	7.7kW	Med High #4	Med High #4	Med #3	Med #3	Med #3	Med #3	Med Low #2
6HK(0,1)6501006 6HK06501025	9.6kW	Med High #4	Med High #4	Med High #4	Med High #4	Med High #4	Med High #4	Med #3
6HK(1,2)6501306	12.5kW	-	Med High #4	Med High #4	Med High #4	Med High #4	Med High #4	Med #3
6HK(1,2)6501506 6HK06501525	14.4kW	-	High #5	High #5	Med High #4	Med High #4	Med High #4	Med #3
6HK(1,2)6501806 6HK06501825	17.3kW	-	-	-	High #5	High #5	High #5	Med High #4
6HK(1,2)6502006 6HK16502025	19.2kW	-	-	-	High #5	High #5	High #5	High #5
6HK(1,2)6502506 6HK16502525	24kW	-	-	-	-	-	-	High #5

1. The referenced letter in this table is for the heat jumper tap.
2. (0,1) - 0 = no circuit breaker OR 1 = with circuit breaker.
3. (1,2) - 1 = with circuit breaker, no breaker jumper bar OR 2 = with circuit breaker & breaker jumper bar.

ELECTRIC HEAT PERFORMANCE DATA: 208/230-1-60 & 208/230-3-60

Heater Models[1,2]		Nominal kW @240V	Total Heat[3]				kW Staging			
			kW		MBH		W1 Only		W1 + W2	
			208V	230V	208V	230V	208V	230V	208V	230V
1PH	6HK(0,1)6500206	2.4	1.8	2.2	6.2	7.5	1.8	2.2	1.8	2.2
	6HK(0,1)6500506	4.8	3.6	4.4	12.3	15.0	3.6	4.4	3.6	4.4
	6HK(0,1)6500806	7.7	5.8	7.1	19.7	24.1	5.8	7.1	5.8	7.1
	6HK(0,1)6501006	9.6	7.2	8.8	24.6	30.1	7.2	8.8	7.2	8.8
	6HK(1,2)6501306	12.5	9.4	11.5	32.0	39.2	3.1	3.8	9.4	11.5
	6HK(1,2)6501506	14.4	10.8	13.2	36.9	45.1	3.6	4.4	10.8	13.2
	6HK(1,2)6501806	17.3	13.0	15.9	44.3	54.2	6.5	7.9	13.0	15.9
	6HK(1,2)6502006	19.2	14.4	17.6	49.2	60.2	7.2	8.8	14.4	17.6
	6HK(1,2)6502506	24.0	18.0	22.0	61.5	75.2	7.2	8.8	18.0	22.0
3PH	6HK06501025	9.6	7.2	8.8	24.6	30.1	7.2	8.8	7.2	8.8
	6HK06501525	14.4	10.8	13.2	36.9	45.1	10.8	13.2	10.8	13.2
	6HK06501825	17.3	13.0	15.9	44.3	54.2	13.0	15.9	13.0	15.9
	6HK16502025	19.2	14.4	17.6	49.2	60.2	7.2	8.8	14.4	17.6
	6HK16502525	24.0	18.0	22.0	61.5	75.2	9.0	11.0	18.0	22.0

1. (0,1) - 0 = no circuit breaker OR 1 = with circuit breaker.
2. (1,2) - 1 = with circuit breaker, no breaker jumper bar OR 2 = with circuit breaker & breaker jumper bar.
3. For different power distributions, see conversion table on Page 5.

ELECTRICAL DATA FOR SINGLE SOURCE POWER SUPPLY: 208/230-1-60

Air Handler Models	Heater Models[1,2]	Heater Amps @240V	Field Wiring					
			Min. Circuit Ampacity		MOP.[3]		Min Wire Size (AWG)[4]	
			208V	230V	208V	230V	208V	230V
AHE18B	6HK(0,1)6500206	10.0	14.3	16.0	15	20	12	12
	6HK(0,1)6500506	20.0	25.2	28.5	30	30	10	10
	6HK(0,1)6500806	32.0	38.2	43.5	40	45	8	8
	6HK(0,1)6501006	40.0	46.8	53.5	50	60	8	6
AHE22B AHE24B AHE30B	6HK(0,1)6500206	10.0	14.3	16.0	15	20	12	12
	6HK(0,1)6500506	20.0	25.2	28.5	30	30	10	10
	6HK(0,1)6500806	32.0	38.2	43.5	40	45	8	8
	6HK(0,1)6501006	40.0	46.8	53.5	50	60	8	6
	6HK(1,2)6501306	52.0	59.8	68.5	60	70	6	4
	6HK(1,2)6501506	60.0	68.5	78.5	70	80	4	4
AHE34C AHE36C AHE42D	6HK(0,1)6500206	10.0	16.0	17.6	20	20	12	12
	6HK(0,1)6500506	20.0	26.8	30.1	30	35	10	10
	6HK(0,1)6500806	32.0	39.8	45.1	40	50	8	8
	6HK(0,1)6501006	40.0	48.5	55.1	50	60	8	6
	6HK(1,2)6501306	52.0	61.5	70.1	70	80	6	4
	6HK(1,2)6501506	60.0	70.1	80.1	80	90	4	4
	6HK(1,2)6501806	72.0	83.1	95.1	90	100	4	3
	6HK(1,2)6502006	80.0	91.8	105.1	100	110	3	2
AHE48D	6HK(0,1)6500206	10.0	18.3	20.0	20	20	12	12
	6HK(0,1)6500506	20.0	29.2	32.5	30	35	10	8
	6HK(0,1)6500806	32.0	42.2	47.5	45	50	8	8
	6HK(0,1)6501006	40.0	50.8	57.5	60	60	6	6
	6HK(1,2)6501306	52.0	63.8	72.5	70	80	6	4
	6HK(1,2)6501506	60.0	72.5	82.5	80	90	4	4
	6HK(1,2)6501806	72.0	85.5	97.5	90	100	3	3
	6HK(1,2)6502006	80.0	94.2	107.5	100	110	3	2

Continuation and notes on next page.

ELECTRICAL DATA FOR SINGLE SOURCE POWER SUPPLY: 208/230-1-60 (Continued)

Air Handler Models	Heater Models[1,2]	Heater Amps @240V	Field Wiring					
			Min. Circuit Ampacity		MOP.[3]		Min Wire Size (AWG)[4]	
			208V	230V	208V	230V	208V	230V
AHE60D	6HK(0,1)6500206	10.0	18.3	20.0	20	20	12	12
	6HK(0,1)6500506	20.0	29.2	32.5	30	35	10	8
	6HK(0,1)6500806	32.0	42.2	47.5	45	50	8	8
	6HK(0,1)6501006	40.0	50.8	57.5	60	60	6	6
	6HK(1,2)6501306	52.0	63.8	72.5	70	80	6	4
	6HK(1,2)6501506	60.0	72.5	82.5	80	90	4	4
	6HK(1,2)6501806	72.0	85.5	97.5	90	100	3	3
	6HK(1,2)6502006	80.0	94.2	107.5	100	110	3	2
	6HK(1,2)6502506	100.0	115.8	132.5	125	150	1	1/0

1. (0,1) - maybe 0 (no circuit breaker) or 1 (with circuit breaker).
2. (1,2) maybe 1 (with circuit breaker, no breaker jumper bar) or 2 (with circuit breaker & breaker jumper bar).
3. MOP = Maximum Overcurrent Protection device; must be HACR type circuit breaker or time delay fuse.
4. Stated sizes are for 75°C, copper wire only. If wire other than non-plated, 75°C ambient, copper wire is used, consult applicable tables of the NEC and local codes.

ELECTRICAL DATA FOR MULTI-SOURCE POWER SUPPLY: 208/230-1-60

Air Handlers Models	Heater Models	Total Heater Amps @240V	Min. Circuit Ampacity						MOP[1]						Min. Wire Size (AWG)[2]					
			208V			230V			208V			230V			208V			230V		
			Circuit						Circuit						Circuit					
			1st[3]	2nd	3rd	1st[3]	2nd	3rd	1st[3]	2nd	3rd	1st[3]	2nd	3rd	1st[3]	2nd	3rd	1st[3]	2nd	3rd
AHE22B AHE24B AHE30B	6HK16501306	52.0	22.2	37.6	–	24.6	43.3	–	25	40	–	25	45	–	10	8	–	10	8	–
	6HK16501506	60.0	25.1	43.3	–	27.9	50.0	–	30	45	–	30	50	–	10	8	–	10	8	–
AHE34C AHE36C AHE42D	6HK16501306	52.0	23.3	37.6	–	25.7	43.3	–	25	40	–	30	45	–	10	8	–	10	8	–
	6HK16501506	60.0	26.2	43.3	–	29.0	50.0	–	30	45	–	30	50	–	10	8	–	10	8	–
	6HK16501806	72.0	43.5	39.0	–	49.0	45.0	–	45	40	–	50	45	–	8	8	–	8	8	–
	6HK16502006	80.0	47.8	43.3	–	54.0	50.0	–	50	45	–	60	50	–	8	8	–	6	8	–
AHE48D	6HK16501306	52.0	25.4	37.6	–	27.8	43.3	–	30	40	–	30	45	–	10	8	–	10	8	–
	6HK16501506	60.0	28.3	43.3	–	31.1	50.0	–	30	45	–	35	50	–	10	8	–	8	8	–
	6HK16501806	72.0	45.6	39.0	–	51.1	45.0	–	50	40	–	60	45	–	8	8	–	6	8	–
	6HK16502006	80.0	49.9	43.3	–	56.1	50.0	–	50	45	–	60	50	–	8	8	–	6	8	–
AHE60D	6HK16501306	52.0	25.4	37.6	–	27.8	43.3	–	30	40	–	30	45	–	10	8	–	10	8	–
	6HK16501506	60.0	28.3	43.3	–	31.1	50.0	–	30	45	–	35	50	–	10	8	–	8	8	–
	6HK16501806	72.0	45.6	39.0	–	51.1	45.0	–	50	40	–	60	45	–	8	8	–	6	8	–
	6HK16502006	80.0	49.9	43.3	–	56.1	50.0	–	50	45	–	60	50	–	8	8	–	6	8	–
	6HK16502506	100.0	49.9	43.3	21.7	56.1	50.0	25.0	50	45	25	60	50	25	8	8	10	6	8	10

1. MOP = Maximum Overcurrent Protection device; must be HACR type circuit breaker or time delay fuse.
2. Stated sizes are for 75°C, copper wire only. If wire other than non-plated, 75°C ambient, copper wire is used, consult applicable tables of the NEC and local codes.
3. 1st Circuit includes the blower motor amps.

ELECTRICAL DATA FOR SINGLE SOURCE POWER SUPPLY - 208/230-3-60

Air Handler Models	Heater Models	Heater Amps @ 240V	Field Wiring					
			Min. Circuit Ampacity		MOP[1]		Min. Wire Size (AWG)[2]	
			208V	230V	208V	230V	208V	230V
AHE22B AHE24B AHE30B	6HK06501025	23.1	28.5	32.4	30	35	10	8
	6HK06501525	34.6	41.0	46.8	45	50	8	8
AHE34C AHE36C AHE42D	6HK06501025	23.1	30.2	34.0	30	35	10	8
	6HK06501525	34.6	42.6	48.4	45	50	8	8
	6HK06501825	41.6	50.2	57.1	60	60	6	6
	6HK16502025[3]	46.2	55.2	62.9	60	70	6	6
AHE48D	6HK06501025	23.1	32.5	36.4	35	40	8	8
	6HK06501525	34.6	45.0	50.8	45	60	8	6
	6HK06501825	41.6	52.6	59.5	60	60	6	6
	6HK16502025[3]	46.2	57.6	65.3	60	70	6	4
AHE60D	6HK06501025	23.1	32.5	36.4	35	40	8	8
	6HK06501525	34.6	45.0	50.8	45	60	8	6
	6HK06501825	41.6	52.6	59.5	60	60	6	6
	6HK16502025[3]	46.2	57.6	65.3	60	70	6	4
	6HK16502525[3]	57.7	70.0	79.6	70	80	4	4

1. MOP = Maximum Overcurrent Protection device; must be HACR type circuit breaker or time delay fuse.
2. Stated sizes are for 75°C, copper wire only. If wire other than non-plated, 75°C ambient, copper wire is used, consult applicable tables of the NEC and local codes..
3. The 20kW and 25kW heater models (6HK16502025 and 6HK16502525) come with circuit breakers standard. Single source power MCA and MOP requirements are given here only for reference if used with field installed single point power modification.

ELECTRICAL DATA FOR MULTI-SOURCE POWER SUPPLY: 208/230-3-60

Air Handler Models	Heater Models	Total Heater Amps @ 240V	Min. Circuit Ampacity				MOP[1]				Min. Wire Size (AWG)[2]			
			208V		230V		208V		230V		208V		230V	
			Circuit				Circuit				Circuit			
			1st[3]	2nd	1st[3]	2nd	1st[3]	2nd	1st[3]	2nd	1st[3]	2nd	1st[3]	2nd
AHE34C AHE36C AHE42D	6HK16502025	46.2	30.2	25.0	34.0	28.9	35	25	35	30	8	10	8	10
AHE48D	6HK16502025	46.2	32.5	25.0	36.4	28.9	35	25	40	30	8	10	8	10
AHE60D	6HK16502025	46.2	32.5	25.0	36.4	28.9	35	25	40	30	8	10	8	10
	6HK16502525	57.7	38.8	31.3	43.6	36.1	40	35	45	40	8	8	8	8

1. MOP = Maximum Overcurrent Protection device; must be HACR type circuit breaker or time delay fuse.
2. Stated sizes are for 75°C, copper wire only. If wire other than non-plated, 75°C ambient, copper wire is used, consult applicable tables of the NEC and local codes.
3. 1st Circuit includes the fan motor.

TYPICAL APPLICATIONS

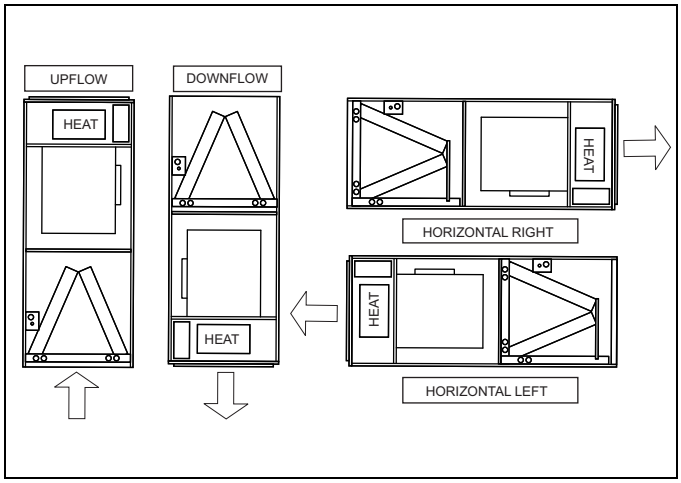

ACCESSORIES

Refer to Price Manual for specific model numbers where not shown.

TXV Kits - TXV kits are available for “Flex-coil” applications and converting R-22 to R-410A or as a service replacement. All kits are bolt-on and require no brazing to install.

Electric Heaters - 6HK models shown under electrical data include sequential operation and temperature dual limit switches for safe, efficient operation. Circuit breakers are provided where shown.

LIMITATIONS

These units must be wired and installed in accordance with all national and local safety codes.

Voltage limits are as follows:

Air Handler Voltage	Voltage code	Normal Operating Voltage Range[1]
208/230-1-60	06	187-253

1. Rated in accordance with ARI Standard 110, utilization range “A”.

Airflow must be within the minimum and maximum limits approved for electric heat, evaporator coils and outdoor units.

AIR FLOW DATA (CFM)[1]

Models	Blower Motor Speed	External Static Pressure (in. wc.)						
		0.10	0.20	0.30	0.40	0.50	0.60	0.70
AHE18B	High #5	1075	1041	1003	970	930	885	842
	Med High #4	895	845	808	767	709	647	561
	Med #3	663	618	557	490	348	267	192
	Med Low #2	629	468	356	197	175	68	23
	Low #1	629	468	356	197	175	68	23
AHE22B AHE24B AHE30B	High #5	1156	1120	1093	1056	1014	951	862
	Med High #4	1021	987	952	918	873	836	787
	Med #3	829	789	754	698	654	585	532
	Med Low #2	681	621	575	496	435	336	262
	Low #1	598	503	437	340	259	203	74
AHE34C	High #5	1471	1429	1387	1337	1289	1233	1172
	Med High #4	1301	1248	1198	1147	1008	999	927
	Med #3	1097	1044	972	906	815	748	680
	Med Low #2	943	868	768	689	617	566	520
	Low #1	869	668	515	424	365	287	NA
AHE36C	High #5	1465	1415	1360	1307	1246	1183	1118
	Med High #4	1260	1204	1142	1075	1008	946	876
	Med #3	1088	1022	939	862	782	721	626
	Med Low #2	998	810	717	630	562	493	444
	Low #1	903	707	411	323	265	152	NA
AHE42D	High #5	1632	1589	1542	1494	1446	1391	1335
	Med High #4	1430	1390	1346	1294	1238	1168	960
	Med #3	1238	1198	1145	1082	993	908	805
	Med Low #2	1118	1020	947	851	734	666	563
	Low #1	998	772	477	418	349	NA	NA
AHE48D	High #5	1861	1823	1787	1750	1708	1666	1620
	Med High #4	1674	1640	1599	1562	1516	1472	1432
	Med #3	1442	1405	1358	1311	1262	1197	1108
	Med Low #2	1257	1220	1163	1103	1031	942	864
	Low #1	1153	1031	967	867	764	718	633
AHE60D	High #5	2091	2053	2016	1975	1937	1906	1869
	Med High #4	1903	1868	1832	1791	1748	1703	1660
	Med #3	1634	1598	1562	1516	1468	1422	1350
	Med Low #2	1447	1404	1361	1318	1257	1164	1092
	Low #1	1268	1203	1148	1073	978	907	839

1. Air handler units have been tested to UL 1995 / CSA 22.2 standards up to 0.30" wc. external static pressure.
Dry coil conditions only, tested without filters.
For optimal performance, external static pressures of 0.2" to 0.5" are recommended. Applications above 0.6" are not recommended.
Airflow data shown is from testing performed at 230V. AHE units use a X13 motor, and there is minimal variation of airflow at other distribution voltage values. The above data can be used for airflow at other distribution voltages.

TYPICAL THERMOSTAT CONNECTION

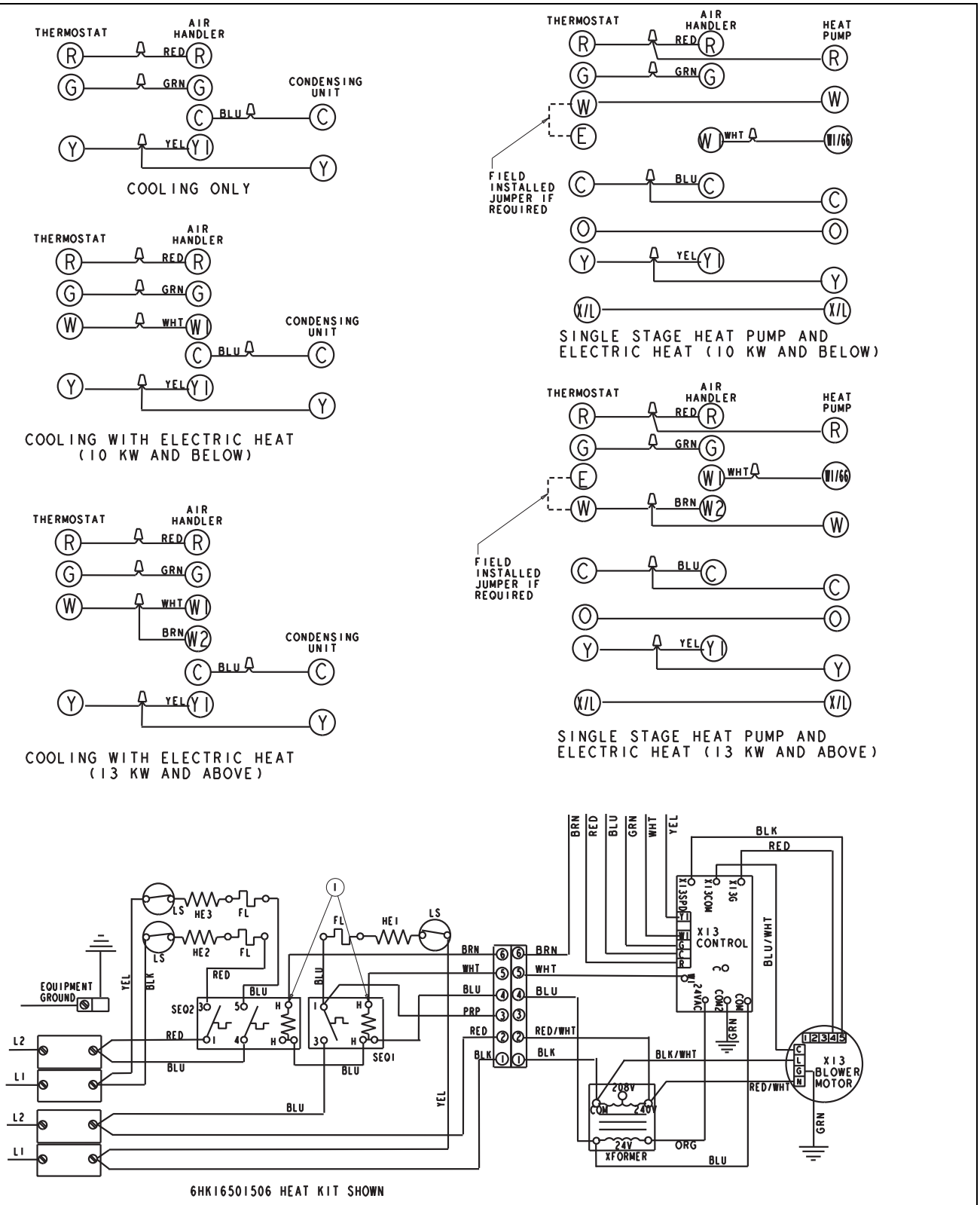

TO CHANGE THE QUANTITY OF HEAT DURING HEAT PUMP DEFROST CYCLE (I) REVERSE THE BROWN AND WHITE WIRE CONNECTIONS ON THE SEQUENCERS IN THE HEATER KIT.

TYPICAL THERMOSTAT WIRING FOR 2-STAGE HEAT PUMP WITH ECM BLOWER MOTOR

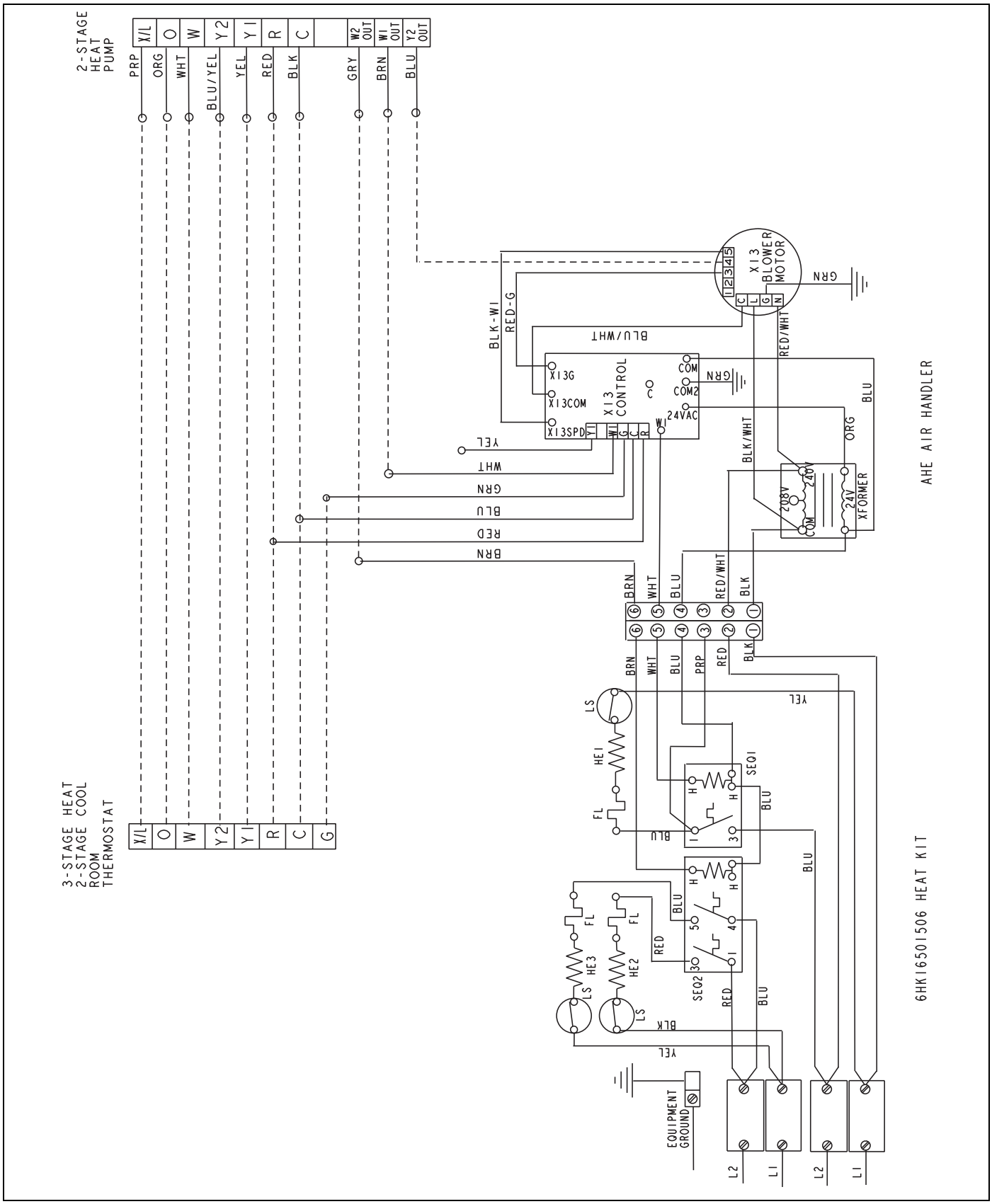

NOTES

Subject to change without notice. Published in U.S.A.
Copyright © 2013 by Johnson Controls, Inc. All rights reserved.

697887-YTG-E-0913
Supersedes: 697887-YTG-D-1012

York International Corp.
5005 York Drive
Norman, OK 73069