HEATING & AIR CONDITIONING

TECHNICAL GUIDE

COMFORTEER™ SERIES

SPLIT-SYSTEM AIR CONDITIONERS

14.5 SEER – R-410A – 1 PHASE

1.5 THRU 5 NOMINAL TONS

MODELS: TCGF18 THRU 60

ISO 9001
Certified Quality
Management System

Due to continuous product improvement, specifications are subject to change without notice.

Visit us on the web at
www.upgnet.com and www.colemanac.com

Additional rating information can be found at
www.ahridirectory.org

WARRANTY SUMMARY*

Standard 5-Years limited parts warranty.

Standard 10-Years limited compressor warranty.

Extended 10-Years limited parts warranty when product is registered online within 90 days of purchase for replacement or closing for new home construction.

*Does not apply to R-22 models, 3-Phase models, or internet sales.
See Limited Warranty certificate in User's Information Manual for details.

DESCRIPTION

The 14.5 SEER Series unit is the outdoor part of a versatile climate system. It is designed with a matching indoor coil component from Johnson Controls Unitary Products. Available for typical applications this climate system is supported with accessories and documents to serve specific functions.

FEATURES

- **Small Footprint -** Extremely lightweight with a compact footprint, it is a perfect fit for any application.
- **Quality Condenser Coils -** The coil is constructed of aluminum microchannel tubing and enhanced aluminum fins for reduced size and increased efficiency.
- **Coil Protection -** Coils are protected from damage by a sturdy polymer mesh and a coated steel wire coil guard.
- **Optional Factory E-Coat -** Available ElectroFin® coated coil on select models.
- **Protected Compressor -** Compressors are protected internally by a high pressure relief valve and a temperature sensor, and externally by the system high pressure switch. A factory installed liquid line filter-drier further protects the compressor against moisture and debris.
- **Environmentally Friendly Refrigerant -** The next generation refrigerant R-410A delivers environmentally friendly performance with zero ozone depletion.
- **Durable Finish -** The cabinet is made of G90-equivalent prepainted steel, with special primer formulas and matte champagne texture to insure less fading when exposed to sunlight. The coated steel wire fan and coil guards and pretreated, galvanized steel chassis components resist corrosion and rust creep.
- **Lower Installed Cost -** Installation time and costs are reduced by easy power and control wiring connections. The unit is factory charged for a 15-foot lineset. The small base dimension means less space is required on the ground or roof.
- **Top Discharge -** Warm air from the top mounted fan is blown up, away from the structure and any landscaping. This allows compact location on multi-unit applications.
- **Competitive Sound Levels -** The upward air flow carries the normal operating noise away from the living area. The rigid top panel effectively isolates any motor sound. Isolator mounted compressor and the condenser coil muffle the normal fan motor and compressor operating sounds.
- **Low Maintenance -** Long life, permanently lubricated motor-bearings need no annual servicing.
- **Easy Service Access -** Fully exposed refrigerant connections and a single panel covering the electrical controls make for easy servicing of the unit.
- **Secured Service Valves -** Secured, re-usable service valves are provided on both the liquid and vapor sweat connections for ease of evacuating and charging.
- **Agency Listed -** Safety certified by CSA to UL 1995 / CSA 22.2. Performance certified to ANSI/AHRI Standard 210/240 in accordance with the Unitary Small Equipment certification program.

Physical and Electrical Data

MODEL		TCGF18 S41S3(E)	TCGF24 S41S3(E)	TCGF30 S41S3(E)	TCGF36 S41S3(E)	TCGF42 S41S3(E)	TCGF48 S41S4(E)	TCGF60 S41S4(E)
Unit Supply Voltage		208-230V, 1ϕ, 60Hz						
Normal Voltage Range [1]		187 to 252						
Minimum Circuit Ampacity		12.0	16.8	18.4	19.1	23.9	26.3	32.7
Max. Overcurrent Device Amps [2]		20	25	30	30	40	45	50
Min. Overcurrent Device Amps [3]		15	20	20	20	25	30	35
Compressor Type		Scroll	Scroll	Scroll	Scroll	Scroll	Scroll	Scroll
Compressor Amps	Rated Load	9.0	12.8	14.1	14.1	17.9	19.9	25.0
	Locked Rotor	46	58	73	77	112	109	134
Crankcase Heater		No	No	No	No	No	No	No
Factory External Discharge Muffler		No	No	No	No	No	No	No
Factory External Check Valve		No	No	No	No	No	No	No
HS Kit Required with TXV [4]		No	No	No	No	No	No	No
Fan Motor Amps	Rated Load	0.8	0.8	0.8	1.5	1.5	1.5	1.5
Fan Diameter Inches		22	22	22	22	24	24	24
Fan Motor	Rated HP	1/8	1/8	1/8	1/4	1/4	1/4	1/4
	Nominal RPM	1075	1075	1075	850	850	850	850
	Nominal CFM	2750	2750	2800	3200	3600	3700	3750
Coil	Face Area Sq. Ft.	13.1	13.1	17.4	17.4	20.0	21.4	24.0
	Rows Deep	1	1	1	1	1	1	1
	Fins / Inch	23	23	23	23	23	23	23
Liquid Line Set OD (Field Installed)		3/8	3/8	3/8	3/8	3/8	3/8	3/8
Vapor Line Set OD (Field Installed)		3/4	3/4	3/4	3/4	7/8	7/8	7/8
Unit Charge (Lbs. - Oz.) [5]		3 - 10	3 - 2	3 - 7	3 - 10	4 - 4	5 - 1	5 - 4
Charge Per Foot, Oz.		0.62	0.62	0.62	0.62	0.67	0.67	0.67
Operating Weight Lbs.		125	128	130	145	172	208	231

Models with "E" on the end of the model number have an ElectroFin® coating on the outdoor coil.

1. Rated in accordance with AHRI Standard 110-2012, utilization range "A".
2. Dual element fuses or HACR circuit breaker. Maximum allowable overcurrent protection.
3. Dual element fuses or HACR circuit breaker. Minimum recommended overcurrent protection.
4. See Hard Start Kit Accessory Installation Manual for Hard Start Kit part number for each model.
5. The Unit Charge is correct for the outdoor unit, smallest matched indoor unit, and 15 feet of refrigerant tubing. For tubing lengths other than 15 feet, add or subtract the amount of refrigerant, using the difference in length multiplied by the per foot value.

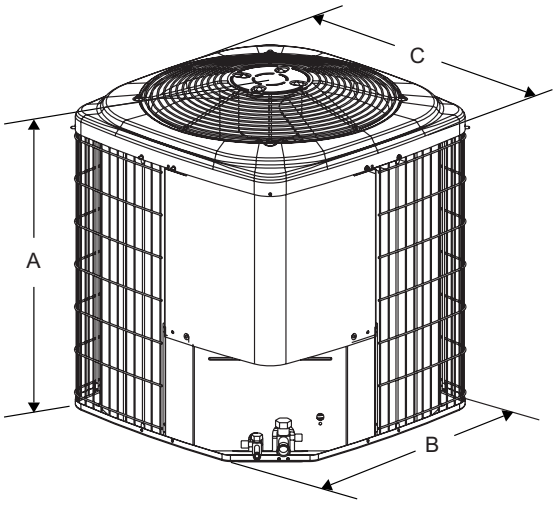

Unit Model	Dimensions (Inches)			Refrigerant Connection Service Valve Size	
	A	B	C	Liquid	Vapor
18	28-1/4	29-1/2	29-1/2	3/8	3/4
24	28-1/4	29-1/2	29-1/2		
30	36-1/4	29-1/2	29-1/2		
36	36-1/4	29-1/2	29-1/2		
42	34-1/4	34	34		7/8
48	36-1/4	34	34		
60	40-1/4	34	34		

All dimensions are in inches and are subject to change without notice.
Overall height is from bottom of base pan to top of fan guard.
Overall length and width include screw heads.

System Charge for Various Matched Systems							
Outdoor Unit	TCGF18 S41S3(E)	TCGF24 S41S3(E)	TCGF30 S41S3(E)	TCGF36 S41S3(E)	TCGF42 S41S3(E)	TCGF48 S41S4(E)	TCGF60 S41S4(E)
Required TXV [1,2]	4F1	4F1	4G1	4G1	4G1	4J1	4J1
Indoor Unit [3,4,5]	**Additional Charge, oz**						
AHE18B	0	–	–	–	–	–	–
AHE24B	15	16	–	–	–	–	–
AHE30B	15	16	13	–	–	–	–
AHE36C	24	23	19	15	–	–	–
AHE42D	–	35	30	25	17	–	–
AHE48D	–	–	–	24	16	11	–
AHE60D	–	–	–	29	22	15	13
AHR18B	0	–	–	–	–	–	–
AHR24B	–	16	–	–	–	–	–
AHR30B	–	–	12	–	–	–	–
AHR36B	–	–	19	15	–	–	–
AHR42C	–	–	–	25	17	–	–
AHR48D	–	–	–	–	16	11	–
AHR60D	–	–	–	–	22	15	13
AHV18B	0	–	–	–	–	–	–
AHV24B	15	16	–	–	–	–	–
AHV30B	15	16	13	–	–	–	–
AHV36C	23	22	19	15	–	–	–
AHV42D	–	–	31	25	17	–	–
AHV48D	–	–	–	24	16	11	–
AHV60D	–	–	–	–	21	15	13
AV*24	3	–	–	–	–	–	–
AV*36	23	23	19	15	–	–	–
AV*48	–	–	–	24	18	11	–
AV*60	–	–	–	–	18	11	9
FC/MC/PC18	0	–	–	–	–	–	–
FC/MC/PC32	15	16	13	–	–	–	–
FC/MC/PC35	15	16	13	–	–	–	–
FC/MC/PC37	23	22	19	15	–	–	–
FC/MC/PC43	23	22	19	15	8	–	–
FC/MC/PC48	–	34	30	25	17	9	–
FC/MC/PC60	–	–	–	24	16	11	9
FC/MC62	–	–	–	29	21	15	13
FC64	–	–	–	39	30	26	21
HD24	14	–	–	–	–	–	–
HD36	19	19	16	–	–	–	–
HD48	–	45	40	34	26	–	–
HD60	–	–	–	–	22	8	6
UC18	2	–	–	–	–	–	–
UC48	–	–	–	–	11	10	–
UC60	–	–	–	24	16	13	11
Some of the combinations shown in the above System Charge table require Advanced Main Air Circulating Fan indoor product. For approved coil only matches, please see the “COOLING CAPACITY - Upflow, Downflow & Horizontal Furnaces and Coils” table.							

FOOTNOTES:

1. For applications requiring a TXV use S1-1TVM*** series kit.
2. A TXV kit must be used with these indoor units to obtain system performance.
3. Systems matched with furnaces or air handlers not equipped with blower-off delays may require blower Time Delay Kit S1-2FD06700224.
4. PC coils cannot be used in downflow or horizontal applications. FC coils cannot be used in horizontal applications.
5. Refer to Cooling Performance Data tables for actual system performance for specified system matches.

PROCEDURES:

1. Unit factory charge listed on the unit nameplate includes refrigerant for the outdoor unit, the smallest matched indoor unit, and 15 feet of interconnecting line tubing.
2. Verify the TXV and additional charge required for specific matched indoor unit in the system using the above table.
3. Add additional charge for the amount of interconnecting line tubing greater than 15 feet at the rate specified in Physical and Electrical Data Table.
4. For indoor matches requiring additional charge, the refrigerant needs to be weighed in for specific matched indoor unit and lineset length.
5. Permanently mark the unit nameplate with the total system charge. Total System Charge = Base Charge (as shipped) + charge adder for matched indoor unit + charge adder for line set.

COOLING CAPACITY - With Air Handler Coils

UNIT MODEL	AIR HANDLER		COIL MODEL[1]	COOLING				
	MODEL	WIDTH		RATED CFM	NET MBH		SEER	EER
					TOTAL	SENS.		
14.5 SEER AC WITH AIR HANDLERS								
TCGF18S41S3(E)	AHE18B	17.5	–	610	17.9	13.0	16.25	13.25
	AHE24B	17.5	–	585	18.1	13.1	16.75	13.50
	AHE30B	17.5	–	585	18.1	13.1	16.75	13.50
	AHE36C	21.0	–	730	19.2	15.0	17.50	14.25
	AHR18B	17.5	–	665	17.7	13.1	14.25	12.00
	AHV18B	17.5	–	615	17.6	12.8	16.00	13.00
	AHV24B	17.5	–	580	17.8	12.9	16.50	13.25
	AHV30B	17.5	–	700	18.0	13.8	16.50	13.25
	AHV36C	21.0	–	670	18.2	13.7	17.00	13.75
	AV*24	17.5	–	610	18.1	13.2	16.50	13.50
	AV*36	21.0	–	630	18.7	13.8	17.50	14.00
	MV12B	17.5	FC/MC18B	600	17.9	12.7	16.25	13.25
	MV12B	17.5	FC/MC35B	600	18.2	13.1	16.50	13.25
	MV12B	17.5	FC/MC43B	600	18.4	13.2	16.75	13.50
	MX12B	17.5	FC/MC18B	585	17.9	12.8	16.50	13.50
	MX12B	17.5	FC/MC35B	660	18.6	14.1	17.50	14.25
	MX12B	17.5	FC/MC43B	620	18.5	13.3	17.50	14.00
TCGF24S41S3(E)	AHE24B	17.5	–	795	25.2	18.7	16.25	13.50
	AHE30B	17.5	–	795	25.2	18.7	16.25	13.50
	AHE36C	21.0	–	855	26.2	19.7	17.00	14.25
	AHE42D	24.5	–	820	26.4	19.5	17.25	14.50
	AHR24B	17.5	–	740	24.8	17.7	15.00	12.75
	AHV24B	17.5	–	710	24.0	17.0	15.75	13.25
	AHV30B	17.5	–	775	24.2	17.5	15.75	13.25
	AHV36C	21.0	–	760	24.4	17.7	16.25	13.50
	AV*36	21.0	–	725	25.8	18.6	16.50	13.75
	MV12B	17.5	FC/MC35B	800	25.6	18.0	16.00	13.50
	MV12B	17.5	FC/MC43B	800	25.8	18.4	16.10	13.75
	MV12D	24.5	FC/MC48D	845	26.4	19.8	17.25	14.50
	MV16C	21.0	FC/MC35C	800	25.6	18.0	16.00	13.50
	MV16C	21.0	FC/MC43C	800	25.8	18.4	16.10	13.75
	MV16C	21.0	FC/MC48C	800	26.2	18.7	16.50	14.00
	MX12B	17.5	FC/MC35B	815	25.6	18.8	17.00	14.25
	MX12B	17.5	FC/MC43B	735	25.6	18.4	16.75	14.00
TCGF30S41S3(E)	AHE30B	17.5	–	985	29.6	21.1	15.50	13.00
	AHE36C	21.0	–	1000	30.4	21.9	16.25	13.75
	AHE42D	24.5	–	1000	30.8	22.3	16.75	14.00
	AHR30B	17.5	–	1115	29.8	21.9	14.25	12.00
	AHR36B	17.5	–	1060	30.0	21.7	14.50	12.25
	AHV30B	17.5	–	1000	29.0	20.7	14.75	12.50
	AHV36C	21.0	–	895	29.4	20.5	16.00	13.25
	AHV42D	24.5	–	1080	30.0	22.2	16.25	13.50
	AV*36	21.0	–	960	30.4	22.7	16.25	13.50
	MV12B	17.5	FC/MC35B	1000	29.6	21.4	15.25	13.00
	MV12B	17.5	FC/MC43B	1000	30.2	22.0	15.75	13.25
	MV16C	21.0	FC/MC35C	1000	29.6	21.4	15.50	13.25
	MV16C	21.0	FC/MC43C	1000	30.2	22.0	16.00	13.50
	MV16C	21.0	FC/MC48C	1000	30.6	22.2	16.00	13.50
	MV20D	24.5	FC/MC48D	1000	30.6	22.2	16.00	13.50
	MX12B	17.5	FC/MC35B	1085	30.4	22.1	16.00	13.25

For notes see Page 6.

COOLING CAPACITY - With Air Handler Coils (Continued)

UNIT MODEL	AIR HANDLER		COIL MODEL[1]	COOLING				
	MODEL	WIDTH		RATED CFM	NET MBH		SEER	EER
					TOTAL	SENS.		
14.5 SEER AC WITH AIR HANDLERS								
TCGF30S41S3(E)	MX12B	17.5	FC/MC43B	1095	30.8	22.7	16.25	13.50
	MX16C	21.0	FC/MC35C	1035	30.2	21.7	16.50	13.75
	MX16C	21.0	FC/MC43C	970	30.4	22.1	16.75	14.00
	MX16C	21.0	FC/MC48C	995	30.8	22.3	17.00	14.25
TCGF36S41S3(E)	AHE36C	21.0	–	1190	35.0	26.0	16.00	13.50
	AHE42D	24.5	–	1180	35.2	26.4	16.50	13.75
	AHE48D	24.5	–	1195	35.0	26.2	16.50	13.75
	AHE60D	24.5	–	1190	35.4	26.6	16.75	14.00
	AHR36B	17.5	–	1245	34.2	25.2	14.25	12.00
	AHR42C	21.0	–	1230	34.8	26.2	14.75	12.50
	AHV36C	21.0	–	1215	34.4	25.8	15.50	12.75
	AHV42D	24.5	–	1180	34.8	26.1	16.25	13.25
	AHV48D	24.5	–	1155	34.2	25.5	16.25	13.25
	AV*36	21.0	–	1190	35.2	25.7	15.75	13.20
	AV*48	24.5	–	1220	33.6	24.8	15.25	13.00
	MV12B	17.5	FC/MC43B	1200	34.8	25.6	15.50	13.00
	MV12D	24.5	FC/MC48D	1160	35.2	25.8	16.00	13.25
	MV12D	24.5	FC/MC60D	1135	34.6	25.4	16.00	13.25
	MV12D	24.5	FC/MC62D	1155	35.4	26.6	16.75	14.00
	MV12D	24.5	FC64D	1155	36.0	27.0	17.00	13.50
	MV16C	21.0	FC/MC43C	1200	35.0	25.8	16.00	13.25
	MV16C	21.0	FC/MC48C	1200	35.4	26.4	16.25	13.25
	MV20D	24.5	FC/MC48D	1300	35.8	27.6	16.50	14.00
	MV20D	24.5	FC/MC60D	1300	35.2	27.2	16.25	13.50
	MV20D	24.5	FC/MC62D	1300	35.6	27.6	16.50	13.75
	MV20D	24.5	FC64D	1300	36.0	27.0	16.50	13.50
	MX12B	17.5	FC/MC43B	1220	35.0	26.2	15.50	13.00
	MX12D	24.5	FC/MC48D	1225	35.4	26.8	16.25	13.50
	MX12D	24.5	FC/MC60D	1275	35.2	26.8	16.25	13.50
	MX12D	24.5	FC/MC62D	1270	35.8	27.4	16.75	14.00
	MX12D	24.5	FC64D	1270	36.8	28.6	17.25	14.50
	MX16C	21.0	FC/MC43C	1140	34.8	25.8	16.50	13.75
	MX16C	21.0	FC/MC48C	1150	35.2	26.4	16.75	14.00
	MX20D	24.5	FC/MC60D	1295	35.4	27.4	16.75	14.00
	MX20D	24.5	FC/MC62D	1260	35.6	27.4	16.75	14.00
	MX20D	24.5	FC64D	1260	36.8	28.6	17.25	14.50
TCGF42S41S3(E)	AHE42D	24.5	–	1385	41.5	31.0	16.00	13.25
	AHE48D	24.5	–	1385	40.5	30.6	16.00	13.00
	AHE60D	24.5	–	1390	41.5	31.4	16.25	13.25
	AHR42C	21.0	–	1485	41.0	31.2	14.75	12.00
	AHR48D	24.5	–	1320	39.5	29.2	14.25	11.75
	AHR60D	24.5	–	1350	40.5	30.2	14.75	12.25
	AHV42D	24.5	–	1385	40.0	30.2	15.00	12.50
	AHV48D	24.5	–	1300	40.5	29.8	15.25	12.75
	AHV60D	24.5	–	1340	41.0	30.8	15.25	12.75
	AV*48	24.5	–	1385	40.0	29.8	14.75	12.50
	AV*60	24.5	–	1360	40.0	29.8	14.75	12.50
	MV12D	24.5	FC64D	1155	42.0	30.4	16.00	13.00
	MV16C	21.0	FC/MC43C	1400	41.0	30.8	15.00	12.75
	MV16C	21.0	FC/MC48C	1400	41.5	31.2	15.50	13.00

For notes see Page 6.

COOLING CAPACITY - With Air Handler Coils (Continued)

UNIT MODEL	AIR HANDLER		COIL MODEL[1]	COOLING				
	MODEL	WIDTH		RATED CFM	NET MBH		SEER	EER
					TOTAL	SENS.		
14.5 SEER AC WITH AIR HANDLERS								
TCGF42S41S3(E)	MV16C	21.0	FC60C	1400	40.5	30.6	15.50	12.75
	MV20D	24.5	FC/MC48D	1400	42.0	31.4	15.50	13.00
	MV20D	24.5	FC/MC60D	1400	41.5	31.4	15.50	13.00
	MV20D	24.5	FC/MC62D	1400	42.0	31.4	16.00	13.00
	MV20D	24.5	FC64D	1300	42.0	31.4	16.50	13.50
	MX16C	21.0	FC/MC43C	1365	41.0	30.6	16.00	13.25
	MX16C	21.0	FC/MC48C	1390	41.5	31.2	16.25	13.25
	MX16C	21.0	FC60C	1420	40.5	30.8	16.00	13.00
	MX20D	24.5	FC/MC48D	1415	41.5	31.2	16.00	13.25
	MX20D	24.5	FC/MC60D	1470	41.0	31.6	16.25	13.25
	MX20D	24.5	FC/MC62D	1470	41.5	32.2	16.25	13.50
	MX20D	24.5	FC64D	1470	43.0	33.4	16.75	13.75
TCGF48S41S4(E)	AHE48D	24.5	–	1600	46.0	32.6	15.25	12.50
	AHE60D	24.5	–	1565	46.5	33.2	15.75	13.00
	AHR48D	24.5	–	1610	45.5	32.0	14.25	11.75
	AHR60D	24.5	–	1620	46.5	33.0	14.50	12.25
	AHV48D	24.5	–	1585	45.5	31.9	14.75	12.25
	AHV60D	24.5	–	1570	46.0	32.4	15.00	12.50
	AV*48	24.5	–	1625	46.0	32.4	15.00	12.50
	AV*60	24.5	–	1560	46.0	32.6	15.25	12.50
	MV16C	21.0	FC/MC48C	1625	45.0	33.2	15.00	12.25
	MV16C	21.0	FC60C	1625	46.0	32.2	15.00	12.50
	MV20D	24.5	FC/MC48D	1620	45.5	33.4	15.50	12.50
	MV20D	24.5	FC/MC60D	1600	46.0	32.2	15.00	12.25
	MV20D	24.5	FC/MC62D	1630	47.0	33.8	15.50	12.75
	MV20D	24.5	FC64D	1630	47.5	34.2	16.00	13.00
	MX16C	21.0	FC/MC48C	1685	45.5	34.0	15.25	12.25
	MX16C	21.0	FC60C	1420	45.5	31.0	15.75	13.00
	MX20D	24.5	FC/MC48D	1525	45.5	33.4	15.50	12.75
	MX20D	24.5	FC/MC60D	1470	45.5	31.2	16.00	13.00
	MX20D	24.5	FC/MC62D	1605	47.0	34.0	16.00	13.25
	MX20D	24.5	FC64D	1605	47.5	34.4	16.50	13.50
TCGF60S41S4(E)	AHE60D	24.5	–	1835	56.5	39.6	14.50	12.50
	AHR60D	24.5	–	1870	56.0	39.1	13.75	11.75
	AHV60D	24.5	–	1635	55.5	37.4	14.25	12.00
	AV*60	24.5	–	1730	55.5	37.4	14.50	12.00
	MV20D	24.5	FC/MC60D	1845	56.0	38.1	14.50	12.25
	MV20D	24.5	FC/MC62D	1855	56.5	39.6	14.25	12.25
	MV20D	24.5	FC64D	1855	57.5	40.5	14.50	12.50
	MX20D	24.5	FC/MC60D	1780	55.5	37.4	14.50	12.50
	MX20D	24.5	FC/MC62D	1795	57.0	39.6	15.00	12.75
	MX20D	24.5	FC64D	1795	57.5	41.0	15.25	13.00

Rated in accordance with DOE test procedures (Federal Register 12-27-79 and 3-18-88) and ANSI/AHRI Standard 210/240.
Cooling MBH based on 80°F entering air temperature, 50% RH (Relative Humidity), and rated air flow.
EER (Energy Efficiency Ratio) is the total cooling output in BTUs at 95°F outdoor ambient divided by the total electric power in watt-hours at those conditions.
SEER (Seasonal Energy Efficiency Ratio) is the total cooling output in BTUs during a normal annual usage period for cooling divided by the total electric power input in watt-hours during the same period.

1. MC coils available with a factory installed horizontal drain pan. See price pages for specific model number.

— = Not applicable.

MA Modular Air Handlers use Coil Only Ratings.

COOLING CAPACITY - Upflow, Downflow & Horizontal Furnaces and Coils (Coil Only Ratings)

UNIT MODEL	COIL		CFM RANGE (MIN.-MAX.)	COOLING				
	MODEL	WIDTH		RATED CFM	NET MBH		SEER [1]	EER
					TOTAL	SENS.		
14.5 SEER AC COIL ONLY RATINGS								
TCGF18S41S3(E)	FC/MC/PC18	14.5,17.5	450-750	600	17.3	12.4	14.00	11.50
	FC/MC/PC32	14.5	450-750	600	17.8	12.8	14.50	12.00
	FC/MC/PC35	17.5,21.0	450-750	600	17.8	12.8	14.50	12.00
	FC/MC/PC37	14.5	450-750	600	18.0	12.9	14.75	12.00
	FC/MC/PC43	17.5,21.0	450-750	600	18.0	12.9	14.75	12.00
	HD24	–	450-750	600	17.9	12.8	14.50	12.00
	HD36	–	450-750	600	17.3	11.9	14.00	11.50
	UC18	14.5,17.5	450-750	600	17.4	12.5	14.00	11.75
TCGF24S41S3(E)	FC/MC/PC32	14.5	500-900	700	24.4	17.2	14.50	12.30
	FC/MC/PC35	17.5,21.0	500-900	800	25.0	17.6	14.50	12.35
	FC/MC/PC37	14.5	500-900	800	25.4	17.9	14.50	12.35
	FC/MC/PC43	17.5,21.0	500-900	800	25.2	18.0	14.70	12.50
	FC/MC/PC48	21.0,24.5	500-900	800	25.6	18.3	14.80	12.65
	HD36	–	500-900	800	24.8	17.0	14.00	12.00
	HD48	–	500-900	800	25.6	17.9	14.50	12.35
TCGF30S41S3(E)	FC/MC/PC32	14.5	800-1200	1000	29.0	21.0	14.00	12.00
	FC/MC/PC35	17.5,21.0	800-1200	1000	29.0	21.0	14.00	12.00
	FC/MC/PC37	14.5	800-1200	1000	29.6	21.6	14.50	12.35
	FC/MC/PC43	17.5,21.0	800-1200	1000	29.6	21.8	14.50	12.30
	FC/MC/PC48	21.0,24.5	800-1200	1000	30.0	21.8	14.50	12.35
	HD36	–	800-1200	1000	28.8	20.2	14.00	12.00
	HD48	–	800-1200	1000	29.8	21.4	14.50	12.35
TCGF36S41S3(E)	FC/MC/PC37	14.5	1000-1400	1200	34.4	25.2	14.50	12.20
	FC/MC/PC43	17.5,21.0	1000-1400	1200	34.2	25.0	14.50	12.30
	FC/MC/PC48	21.0,24.5	1000-1400	1200	34.6	25.4	14.50	12.25
	FC/MC/PC60	21.0,24.5	1000-1400	1200	34.0	25.4	14.25	12.00
	FC/MC62	24.5	1000-1400	1200	34.4	25.8	14.50	12.25
	FC64	24.5	1000-1400	1200	35.6	26.8	14.75	12.50
	HD48	–	1000-1400	1200	34.6	25.0	14.50	12.20
	UC60	21.0,24.5	1000-1400	1200	33.2	23.8	14.00	11.75
TCGF42S41S3(E)	FC/MC/PC43	17.5,21.0	1200-1600	1400	40.5	30.4	14.00	12.00
	FC/MC/PC48	21.0,24.5	1200-1600	1400	40.5	30.4	14.50	12.00
	FC/MC/PC60	21.0,24.5	1200-1600	1400	41.0	30.8	14.50	12.30
	FC/MC62	24.5	1200-1600	1400	41.0	31.0	14.50	12.30
	FC64	24.5	1200-1600	1400	41.5	32.0	14.75	12.25
	HD48	–	1200-1600	1400	41.0	30.4	14.25	12.10
	HD60	–	1200-1600	1400	41.5	31.2	14.50	12.30
TCGF48S41S4(E)	FC/MC/PC48	21.0,24.5	1400 - 1800	1600	44.5	32.8	14.25	11.75
	FC/MC/PC60	21.0,24.5	1400 - 1800	1600	45.5	31.8	14.25	11.75
	FC/MC62	24.5	1400 - 1800	1600	46.0	32.8	14.50	12.00
	FC64	24.5	1400 - 1800	1600	46.5	33.8	14.75	12.25
	HD60	–	1400 - 1800	1600	46.5	32.4	14.50	12.00
	UC48	21.0,24.5	1400 - 1800	1600	44.5	32.8	14.25	11.75
	UC60	21.0,24.5	1400 - 1800	1600	45.0	31.8	14.25	11.75
TCGF60S41S4(E)	FC/MC/PC60	21.0,24.5	1600 - 2000	1800	54.5	36.8	13.50	11.75
	FC/MC62	24.5	1600 - 2000	1800	56.0	38.6	14.00	12.00
	FC64	24.5	1600 - 2000	1800	57.0	40.5	14.25	12.25
	HD60	–	1600 - 2000	1800	56.5	38.1	14.00	12.00
	UC60	21.0,24.5	1600 - 2000	1800	55.0	37.4	13.75	11.75

1. Requires a S1-2FD06700224 Blower Time Delay unless a standard furnace is equipped with one.
MA Modular Air Handlers use Coil Only Ratings.
PSC furnaces, such as the TG8S, TGLS, and TG9s, use Coil Only Ratings.

COOLING CAPACITY - With High Efficiency Motor Furnaces

UNIT MODEL	FURNACE		COIL MODEL[1]	COOLING				
	MODEL	WIDTH		RATED CFM	NET MBH		SEER	EER
					TOTAL	SENS.		
14.5 SEER AC WITH HIGH EFFICIENCY MOTOR FURNACES [2]								
TCGF18S41S3(E)	T*(8,L)V*A12	14.5	FC/MC/PC18A	615	17.8	12.7	16.00	13.00
	T*(8,L)V*A12	14.5	FC/MC/PC32A	620	18.2	13.1	16.50	13.25
	T*(8,L)V*A12	14.5	FC/MC/PC37A	635	18.6	13.8	17.00	13.75
	T*(8,L)V*A12	14.5	HD24	640	18.6	13.7	17.00	13.75
	T*(8,L)V*A12	14.5	HD36	645	18.0	12.8	16.25	13.25
	T*(8,L)V*A12	14.5	UC18A	620	17.9	12.8	16.25	13.25
	T*(8,L)V*B12	17.5	FC/MC/PC18B	625	17.8	12.7	16.00	13.00
	T*(8,L)V*B12	17.5	FC/MC/PC35B	630	18.4	13.6	16.75	13.50
	T*(8,L)V*B12	17.5	FC/MC/PC43B	570	18.2	13.0	16.75	13.50
	T*(8,L)V*B12	17.5	HD24	575	18.5	13.2	17.25	14.00
	T*(8,L)V*B12	17.5	HD36	650	18.1	12.9	16.50	13.25
	T*(8,L)V*B12	17.5	UC18B	580	17.9	12.9	16.25	13.25
	T*(8,L)V*C16	21.0	FC/MC/PC35C	645	18.4	13.8	17.00	13.50
	T*(8,L)V*C16	21.0	HD24	600	18.4	13.1	17.25	13.75
	T*(8,L)V*C16	21.0	HD36	595	17.8	12.3	16.50	13.25
	T*(8,L)X*A12	14.5	FC/MC/PC18A	540	17.5	12.3	16.00	13.25
	T*(8,L)X*A12	14.5	FC/MC/PC32A	590	18.4	13.2	17.25	14.00
	T*(8,L)X*A12	14.5	FC/MC/PC37A	640	18.8	14.0	17.50	14.25
	T*(8,L)X*A12	14.5	HD24	605	18.5	13.2	17.50	14.00
	T*(8,L)X*A12	14.5	HD36	605	17.9	12.3	16.75	13.50
	T*(8,L)X*A12	14.5	UC18A	590	18.0	12.9	16.75	13.50
	T*(8,L)X*B12	17.5	FC/MC/PC18B	580	17.9	12.8	16.50	13.50
	T*(8,L)X*B12	17.5	FC/MC/PC35B	640	18.4	13.8	17.50	14.00
	T*(8,L)X*B12	17.5	FC/MC/PC43B	665	19.0	14.3	17.50	14.50
	T*(8,L)X*B12	17.5	HD24	655	18.8	14.0	17.50	14.25
	T*(8,L)X*B12	17.5	HD36	650	18.2	13.0	17.00	13.75
	T*(8,L)X*B12	17.5	UC18B	595	18.0	12.9	16.75	13.50
	T*(8,L)X*C16	21.0	FC/MC/PC35C	625	18.3	13.2	16.75	13.75
	T*(8,L)X*C16	21.0	HD24	650	18.7	13.8	17.25	14.00
	T*9V*A10	14.5	FC/MC/PC18A	580	17.7	12.5	15.25	12.75
	T*9V*A10	14.5	FC/MC/PC32A	580	18.0	13.0	16.25	13.00
	T*9V*A10	14.5	FC/MC/PC37A	570	18.2	13.0	16.25	13.25
	T*9(C,V)*B12	17.5	FC/MC/PC18B	610	17.9	12.7	16.25	13.25
	T*9(C,V)*B12	17.5	FC/MC/PC35B	570	18.0	12.9	16.50	13.50
	T*9(C,V)*B12	17.5	HD24	610	18.4	13.1	17.00	13.75
	T*9(C,V)*B12	17.5	HD36	635	18.0	12.8	16.50	13.25
	T*9(C,V)*B12	17.5	UC18B	610	17.9	12.9	16.50	13.50
	T*9(C,V)*C16	21.0	FC/MC/PC35C	645	18.4	13.8	17.00	13.75
	T*9(C,V)*C16	21.0	HD36	595	17.8	12.3	16.50	13.25
	T*9X*A10	14.5	FC/MC/PC18A	575	17.7	12.5	15.50	13.00
	T*9X*A10	14.5	FC/MC/PC32A	585	18.1	13.0	16.25	13.25
	T*9X*A10	14.5	FC/MC/PC37A	580	18.2	13.1	16.50	13.25
	T*9X*B12	17.5	FC/MC/PC18B	590	17.9	12.8	16.50	13.50
	T*9X*B12	17.5	FC/MC/PC35B	645	18.5	13.9	17.50	14.00
	T*9X*B12	17.5	HD24	630	18.7	13.7	17.50	14.25
	T*9X*B12	17.5	HD36	630	18.1	12.8	16.75	13.75
	T*9X*B12	17.5	UC18B	590	18.0	12.9	16.75	13.50
	C*(8,L)C*A12	14.5	FC/MC/PC18A	615	17.8	12.7	16.00	13.00
	C*(8,L)C*A12	14.5	FC/MC/PC32A	620	18.2	13.1	16.50	13.25
	C*(8,L)C*A12	14.5	FC/MC/PC37A	635	18.6	13.8	17.00	13.75

For notes see Page 19.

COOLING CAPACITY - With High Efficiency Motor Furnaces (Continued)

UNIT MODEL	FURNACE		COIL MODEL[1]	COOLING				
	MODEL	WIDTH		RATED CFM	NET MBH		SEER	EER
					TOTAL	SENS.		
14.5 SEER AC WITH HIGH EFFICIENCY MOTOR FURNACES [2]								
TCGF18S41S3(E)	C*(8,L)C*A12	14.5	HD24	640	18.6	13.7	17.00	13.75
	C*(8,L)C*A12	14.5	HD36	645	18.0	12.8	16.25	13.25
	C*(8,L)C*A12	14.5	UC18A	620	17.9	12.8	16.25	13.25
	C*(8,L)C*B12	17.5	FC/MC/PC18B	625	17.8	12.7	16.00	13.00
	C*(8,L)C*B12	17.5	FC/MC/PC35B	630	18.4	13.6	16.75	13.50
	C*(8,L)C*B12	17.5	FC/MC/PC43B	570	18.2	13.0	16.75	13.50
	C*(8,L)C*B12	17.5	HD24	575	18.5	13.2	17.25	14.00
	C*(8,L)C*B12	17.5	HD36	650	18.1	12.9	16.50	13.25
	C*(8,L)C*B12	17.5	UC18B	580	17.9	12.9	16.25	13.25
	C*(8,L)C*C16	21.0	FC/MC/PC35C	645	18.4	13.8	17.00	13.50
	C*(8,L)C*C16	21.0	HD24	600	18.4	13.1	17.25	13.75
	C*(8,L)C*C16	21.0	HD36	595	17.8	12.3	16.50	13.25
	C*9C*B12	17.5	FC/MC/PC18B	610	17.9	12.7	16.25	13.25
	C*9C*B12	17.5	FC/MC/PC35B	570	18.0	12.9	16.50	13.50
	C*9C*B12	17.5	HD24	610	18.4	13.1	17.00	13.75
	C*9C*B12	17.5	HD36	635	18.0	12.8	16.50	13.25
	C*9C*B12	17.5	UC18B	610	17.9	12.9	16.50	13.50
	C*9C*C16	21.0	FC/MC/PC35C	645	18.4	13.8	17.00	13.75
	C*9C*C16	21.0	HD36	595	17.8	12.3	16.50	13.25
TCGF24S41S3(E)	T*(8,L)V*A12	14.5	FC/MC/PC32A	775	24.0	16.8	15.50	13.25
	T*(8,L)V*A12	14.5	FC/MC/PC37A	805	24.0	16.9	16.00	13.50
	T*(8,L)V*A12	14.5	HD36	805	24.0	16.4	16.00	13.50
	T*(8,L)V*B12	17.5	FC/MC/PC35B	760	24.0	16.8	15.75	13.25
	T*(8,L)V*B12	17.5	FC/MC/PC43B	760	24.0	16.7	16.00	13.50
	T*(8,L)V*B12	17.5	HD36	760	24.0	16.2	15.75	13.25
	T*(8,L)V*C16	21.0	HD36	855	24.0	16.7	16.00	13.50
	T*(8,L)V*C20	21.0	HD36	750	24.0	16.1	15.75	13.25
	T*(8,L)X*A12	14.5	FC/MC/PC32A	800	25.8	19.1	15.75	13.25
	T*(8,L)X*A12	14.5	FC/MC/PC37A	840	26.4	20.0	16.00	13.50
	T*(8,L)X*A12	14.5	HD36	775	20.8	17.4	15.25	13.00
	T*(8,L)X*B12	17.5	FC/MC/PC35B	850	26.0	19.3	15.75	13.25
	T*(8,L)X*B12	17.5	FC/MC/PC43B	865	26.6	20.2	16.00	13.50
	T*(8,L)X*B12	17.5	HD36	855	25.8	19.1	15.50	13.25
	T*(8,L)X*C16	21.0	FC/MC/PC35C	625	24.6	17.2	15.75	13.25
	T*(8,L)X*C16	21.0	FC/MC/PC43C	655	25.2	17.9	16.00	13.50
	T*(8,L)X*C16	21.0	FC/MC/PC48C	685	25.6	18.4	15.75	13.25
	T*(8,L)X*C20	21.0	FC/MC/PC35C	885	26.2	20.0	15.75	13.50
	T*9V*A10	14.5	FC/MC/PC32A	785	25.0	18.2	15.25	12.75
	T*9V*A10	14.5	FC/MC/PC37A	790	25.4	18.6	15.50	13.00
	T*9(C,V)*B12	17.5	FC/MC/PC35B	815	24.0	17.0	15.75	13.25
	T*9(C,V)*B12	17.5	FC/MC/PC43B	800	24.0	16.8	16.00	13.50
	T*9(C,V)*B12	17.5	HD36	815	24.0	16.4	15.75	13.25
	T*9(C,V)*C16	21.0	FC/MC/PC35C	875	25.2	17.6	16.00	13.00
	T*9(C,V)*C16	21.0	HD36	785	24.0	16.4	16.00	13.50
	T*9(C,V)*C20	21.0	HD36	760	24.0	16.1	15.75	13.25
	T*9X*A10	14.5	FC/MC/PC32A	745	25.0	17.9	15.50	13.00
	T*9X*A10	14.5	FC/MC/PC37A	740	25.2	18.2	15.75	13.25
	T*9X*B12	17.5	FC/MC/PC35B	785	25.8	19.3	15.75	13.25
	T*9X*B12	17.5	FC/MC/PC43B	800	26.2	19.5	16.00	13.50
	T*9X*B12	17.5	HD36	790	25.4	18.3	15.25	13.00
	T*9X*C16	21.0	FC/MC/PC35C	715	25.2	18.3	15.75	13.25

For notes see Page 19.

COOLING CAPACITY - With High Efficiency Motor Furnaces (Continued)

UNIT MODEL	FURNACE		COIL MODEL[1]	COOLING				
	MODEL	WIDTH		RATED CFM	NET MBH		SEER	EER
					TOTAL	SENS.		
14.5 SEER AC WITH HIGH EFFICIENCY MOTOR FURNACES [2]								
TCGF24S41S3(E)	T*9X*C16	21.0	FC/MC/PC43C	735	25.8	18.8	16.00	13.50
	T*9X*C16	21.0	FC/MC/PC48C	770	26.2	19.5	15.75	13.25
	T*9X*C20	21.0	FC/MC/PC35C	825	25.8	19.2	15.75	13.50
	T*9X*C20	21.0	FC/MC/PC43C	790	26.2	19.4	15.75	13.25
	T*9X*C20	21.0	FC/MC/PC48C	815	26.8	20.2	15.75	13.25
	C*(8,L)C*A12	14.5	FC/MC/PC32A	775	24.0	16.8	15.50	13.25
	C*(8,L)C*A12	14.5	FC/MC/PC37A	805	24.0	16.9	16.00	13.50
	C*(8,L)C*A12	14.5	HD36	805	24.0	16.4	16.00	13.50
	C*(8,L)C*B12	17.5	FC/MC/PC35B	760	24.0	16.8	15.75	13.25
	C*(8,L)C*B12	17.5	FC/MC/PC43B	760	24.0	16.7	16.00	13.50
	C*(8,L)C*B12	17.5	HD36	760	24.0	16.2	15.75	13.25
	C*(8,L)C*C16	21.0	HD36	855	24.0	16.7	16.00	13.50
	C*(8,L)C*C20	21.0	HD36	750	24.0	16.1	15.75	13.25
	C*9C*B12	17.5	FC/MC/PC35B	815	24.0	17.0	15.75	13.25
	C*9C*B12	17.5	FC/MC/PC43B	800	24.0	16.8	16.00	13.50
	C*9C*B12	17.5	HD36	815	24.0	16.4	15.75	13.25
	C*9C*C16	21.0	FC/MC/PC35C	875	25.2	17.6	16.00	13.00
	C*9C*C16	21.0	HD36	785	24.0	16.4	16.00	13.50
	C*9C*C20	21.0	HD36	760	24.0	16.1	15.75	13.25
TCGF30S41S3(E)	T*(8,L)V*A12	14.5	FC/MC/PC32A	1045	29.2	21.6	14.50	12.25
	T*(8,L)V*A12	14.5	FC/MC/PC37A	980	29.8	21.6	15.00	12.75
	T*(8,L)V*A12	14.5	HD36	1000	29.0	20.6	15.00	12.75
	T*(8,L)V*B12	17.5	FC/MC/PC35B	1020	29.2	22.0	15.20	12.85
	T*(8,L)V*B12	17.5	FC/MC/PC43B	1045	30.0	22.6	15.70	13.30
	T*(8,L)V*B12	17.5	HD36	985	29.2	20.6	15.50	13.00
	T*(8,L)V*C16	21.0	FC/MC/PC35C	985	29.4	21.8	15.70	13.25
	T*(8,L)V*C16	21.0	FC/MC/PC43C	990	30.0	22.0	16.25	13.50
	T*(8,L)V*C16	21.0	FC/MC/PC48C	1010	30.0	22.2	16.50	13.75
	T*(8,L)V*C16	21.0	HD36	1020	29.2	20.8	15.75	13.00
	T*(8,L)V*C20	21.0	FC/MC/PC35C	1035	29.6	22.0	15.60	13.20
	T*(8,L)V*C20	21.0	FC/MC/PC43C	1000	30.0	22.0	16.25	13.75
	T*(8,L)V*C20	21.0	FC/MC/PC48C	1040	30.0	22.2	16.50	13.75
	T*(8,L)V*C20	21.0	HD36	1055	29.6	21.4	15.75	13.25
	T*(8,L)X*A12	14.5	FC/MC/PC32A	970	29.2	21.4	15.25	13.00
	T*(8,L)X*A12	14.5	FC/MC/PC37A	1105	30.6	23.4	15.25	13.00
	T*(8,L)X*A12	14.5	HD36	1115	29.8	22.8	15.00	12.75
	T*(8,L)X*B12	17.5	FC/MC/PC35B	1120	30.0	22.8	15.75	13.25
	T*(8,L)X*B12	17.5	FC/MC/PC43B	1125	30.8	23.6	16.00	13.50
	T*(8,L)X*B12	17.5	HD36	1120	30.0	23.0	15.50	13.00
	T*(8,L)X*C16	21.0	FC/MC/PC35C	1105	30.0	23.0	15.75	13.25
	T*(8,L)X*C16	21.0	FC/MC/PC43C	855	28.4	19.7	16.00	13.50
	T*(8,L)X*C16	21.0	FC/MC/PC48C	875	29.0	20.2	16.25	13.25
	T*(8,L)X*C16	21.0	HD36	1120	30.0	22.6	15.50	13.00
	T*(8,L)X*C20	21.0	FC/MC/PC35C	850	29.0	20.8	15.75	13.25
	T*(8,L)X*C20	21.0	FC/MC/PC43C	870	29.8	21.4	16.00	13.50
	T*(8,L)X*C20	21.0	FC/MC/PC48C	890	30.0	22.0	16.25	13.25
	T*9(C,V)*B12	17.5	FC/MC/PC35B	1045	29.4	21.8	15.00	12.50
	T*9(C,V)*B12	17.5	FC/MC/PC43B	1035	29.8	21.8	15.25	12.75
	T*9(C,V)*B12	17.5	HD36	985	29.2	20.6	15.25	12.75
	T*9(C,V)*C16	21.0	FC/MC/PC35C	1005	29.6	22.0	15.75	13.25
	T*9(C,V)*C16	21.0	FC/MC/PC43C	1030	30.0	22.0	15.50	13.25

For notes see Page 19.

COOLING CAPACITY - With High Efficiency Motor Furnaces (Continued)

UNIT MODEL	FURNACE		COIL MODEL[1]	COOLING				
	MODEL	WIDTH		RATED CFM	NET MBH		SEER	EER
					TOTAL	SENS.		
14.5 SEER AC WITH HIGH EFFICIENCY MOTOR FURNACES [2]								
TCGF30S41S3(E)	T*9(C,V)*C16	21.0	FC/MC/PC48C	990	30.0	22.2	16.25	13.50
	T*9(C,V)*C16	21.0	HD36	1005	29.2	20.8	15.75	13.25
	T*9(C,V)*C20	21.0	FC/MC/PC35C	985	29.6	22.0	15.75	13.25
	T*9(C,V)*C20	21.0	FC/MC/PC43C	995	30.0	22.0	16.00	13.50
	T*9(C,V)*C20	21.0	FC/MC/PC48C	965	30.0	22.2	16.25	13.50
	T*9(C,V)*C20	21.0	HD36	1045	29.2	20.6	15.50	13.00
	T*9(C,V)*D20	24.5	FC/MC/PC48D	1085	30.0	22.6	16.25	13.50
	T*9X*A10	14.5	FC/MC/PC32A	1035	29.4	21.1	14.00	12.00
	T*9X*A10	14.5	FC/MC/PC37A	1025	29.6	21.5	14.25	12.00
	T*9X*B12	17.5	FC/MC/PC35B	1085	30.0	22.6	15.00	13.00
	T*9X*B12	17.5	FC/MC/PC43B	1095	30.6	23.4	16.00	13.25
	T*9X*C16	21.0	FC/MC/PC35C	1075	30.0	22.6	15.00	13.00
	T*9X*C16	21.0	FC/MC/PC43C	1055	30.6	23.0	16.00	13.25
	T*9X*C16	21.0	FC/MC/PC48C	1075	30.8	23.4	16.00	13.25
	T*9X*C20	21.0	FC/MC/PC35C	825	27.4	19.0	14.50	12.30
	T*9X*C20	21.0	FC/MC/PC43C	720	28.4	19.6	16.00	13.25
	T*9X*C20	21.0	FC/MC/PC48C	745	29.0	20.2	16.00	13.25
	T*9X*D20	24.5	FC/MC/PC48D	780	29.2	20.6	16.00	13.25
	C*(8,L)C*A12	14.5	FC/MC/PC32A	1045	29.2	21.6	14.50	12.25
	C*(8,L)C*A12	14.5	FC/MC/PC37A	980	29.8	21.6	15.00	12.75
	C*(8,L)C*A12	14.5	HD36	1000	29.0	20.6	15.00	12.75
	C*(8,L)C*B12	17.5	FC/MC/PC35B	1020	29.2	22.0	15.20	12.85
	C*(8,L)C*B12	17.5	FC/MC/PC43B	1045	30.0	22.6	15.70	13.30
	C*(8,L)C*B12	17.5	HD36	985	29.2	20.6	15.50	13.00
	C*(8,L)C*C16	21.0	FC/MC/PC35C	985	29.4	21.8	15.70	13.25
	C*(8,L)C*C16	21.0	FC/MC/PC43C	990	30.0	22.0	16.25	13.50
	C*(8,L)C*C16	21.0	FC/MC/PC48C	1010	30.0	22.2	16.50	13.75
	C*(8,L)C*C16	21.0	HD36	1020	29.2	20.8	15.75	13.00
	C*(8,L)C*C20	21.0	FC/MC/PC35C	1035	29.6	22.0	15.60	13.20
	C*(8,L)C*C20	21.0	FC/MC/PC43C	1000	30.0	22.0	16.25	13.75
	C*(8,L)C*C20	21.0	FC/MC/PC48C	1040	30.0	22.2	16.50	13.75
	C*(8,L)C*C20	21.0	HD36	1055	29.6	21.4	15.75	13.25
	C*9C*B12	17.5	FC/MC/PC35B	1045	29.4	21.8	15.00	12.50
	C*9C*B12	17.5	FC/MC/PC43B	1035	29.8	21.8	15.25	12.75
	C*9C*B12	17.5	HD36	985	29.2	20.6	15.25	12.75
	C*9C*C16	21.0	FC/MC/PC35C	1005	29.6	22.0	15.75	13.25
	C*9C*C16	21.0	FC/MC/PC43C	1030	30.0	22.0	15.50	13.25
	C*9C*C16	21.0	FC/MC/PC48C	990	30.0	22.2	16.25	13.50
	C*9C*C16	21.0	HD36	1005	29.2	20.8	15.75	13.25
	C*9C*C20	21.0	FC/MC/PC35C	985	29.6	22.0	15.75	13.25
	C*9C*C20	21.0	FC/MC/PC43C	995	30.0	22.0	16.00	13.50
	C*9C*C20	21.0	FC/MC/PC48C	965	30.0	22.2	16.25	13.50
	C*9C*C20	21.0	HD36	1045	29.2	20.6	15.50	13.00
	C*9C*D20	24.5	FC/MC/PC48D	1085	30.0	22.6	16.25	13.50
TCGF36S41S3(E)	T*(8,L)V*A12	14.5	FC/MC/PC37A	1150	34.2	24.8	14.95	12.40
	T*(8,L)V*B12	17.5	FC/MC/PC43B	1275	34.8	26.0	14.90	12.50
	T*(8,L)V*B12	17.5	HD48	1210	34.8	25.6	15.25	12.50
	T*(8,L)V*C16	21.0	FC/MC/PC43C	1205	35.0	25.8	15.75	13.00
	T*(8,L)V*C16	21.0	FC/MC/PC48C	1210	35.6	26.2	16.00	13.25
	T*(8,L)V*C16	21.0	FC/PC60C	1185	35.0	25.8	16.40	13.45
	T*(8,L)V*C16	21.0	HD48	1210	35.2	25.8	16.00	13.25

For notes see Page 19.

COOLING CAPACITY - With High Efficiency Motor Furnaces (Continued)

UNIT MODEL	FURNACE		COIL MODEL[1]	COOLING				
	MODEL	WIDTH		RATED CFM	NET MBH		SEER	EER
					TOTAL	SENS.		
14.5 SEER AC WITH HIGH EFFICIENCY MOTOR FURNACES [2]								
TCGF36S41S3(E)	T*(8,L)V*C16	21.0	UC60C	1195	34.2	24.6	15.75	13.15
	T*(8,L)V*C20	21.0	FC/MC/PC43C	1190	34.6	25.8	15.90	13.10
	T*(8,L)V*C20	21.0	FC/MC/PC48C	1155	35.6	26.4	16.25	13.50
	T*(8,L)V*C20	21.0	FC/PC60C	1215	35.4	26.0	16.20	13.50
	T*(8,L)V*C20	21.0	HD48	1155	35.2	26.0	16.00	13.25
	T*(8,L)V*C20	21.0	UC60C	1215	34.2	24.6	15.70	13.10
	T*(8,L)X*A12	14.5	FC/MC/PC37A	1290	35.4	26.4	15.25	12.75
	T*(8,L)X*B12	17.5	FC/MC/PC43B	1300	35.2	26.6	15.50	13.00
	T*(8,L)X*C16	21.0	FC/MC/PC43C	1175	35.2	25.8	15.50	13.00
	T*(8,L)X*C16	21.0	FC/MC/PC48C	1185	35.8	26.4	16.25	13.25
	T*(8,L)X*C16	21.0	HD48	1120	34.6	25.4	16.00	13.00
	T*(8,L)X*C16	21.0	UC60C	1185	34.0	24.6	15.50	12.75
	T*(8,L)X*C20	21.0	FC/MC/PC43C	1250	35.4	26.4	15.50	13.00
	T*(8,L)X*C20	21.0	FC/MC/PC48C	1270	35.6	26.2	16.25	13.25
	T*(8,L)X*C20	21.0	HD48	1245	35.2	26.2	16.00	13.00
	T*(8,L)X*C20	21.0	UC60D	1295	34.6	25.8	15.50	12.75
	T*9(C,V)*B12	17.5	FC/MC/PC43B	1200	34.6	25.4	14.75	12.25
	T*9(C,V)*B12	17.5	HD48	1150	34.8	25.6	15.25	12.50
	T*9(C,V)*C16	21.0	FC/MC/PC43C	1240	34.8	25.6	15.25	12.75
	T*9(C,V)*C16	21.0	FC/MC/PC48C	1195	35.4	26.2	15.75	13.00
	T*9(C,V)*C16	21.0	FC/PC60C	1235	35.0	25.8	15.50	13.00
	T*9(C,V)*C16	21.0	HD48	1195	35.0	25.8	15.75	13.00
	T*9(C,V)*C16	21.0	UC60C	1235	33.8	24.4	15.00	12.55
	T*9(C,V)*C20	21.0	FC/MC/PC43C	1200	35.0	25.6	15.50	13.00
	T*9(C,V)*C20	21.0	FC/MC/PC48C	1330	35.8	27.2	15.50	12.75
	T*9(C,V)*C20	21.0	FC/PC60C	1330	35.6	27.2	15.65	13.15
	T*9(C,V)*C20	21.0	HD48	1325	35.4	26.4	15.25	12.75
	T*9(C,V)*C20	21.0	UC60C	1285	34.4	25.6	15.15	12.70
	T*9(C,V)*D20	24.5	FC/MC/PC60D	1225	35.2	26.0	15.95	13.35
	T*9(C,V)*D20	24.5	FC/MC62D	1235	35.6	26.4	16.00	13.50
	T*9(C,V)*D20	24.5	FC64D	1235	36.0	27.0	16.00	13.00
	T*9(C,V)*D20	24.5	UC60D	1225	34.0	24.6	15.45	12.90
	T*9X*B12	17.5	FC/MC/PC43B	1270	35.2	26.4	15.25	12.75
	T*9X*C16	21.0	FC/MC/PC43C	1260	35.2	26.4	15.50	13.00
	T*9X*C16	21.0	FC/MC/PC48C	1280	35.6	26.8	16.00	13.00
	T*9X*C16	21.0	FC/PC60C	1275	34.2	25.6	15.50	12.75
	T*9X*C16	21.0	HD48	1255	33.6	26.6	15.75	12.75
	T*9X*C20	21.0	FC/MC/PC43C	1185	35.0	25.8	15.50	13.00
	T*9X*C20	21.0	FC/MC/PC48C	1205	35.6	26.2	16.00	13.00
	T*9X*C20	21.0	FC/PC60C	1240	33.8	24.4	15.50	12.75
	T*9X*C20	21.0	HD48	1245	35.2	26.2	15.75	12.75
	T*9X*D20	24.5	FC/MC/PC48D	1240	35.6	26.2	16.00	13.00
	T*9X*D20	24.5	FC64D	1225	36.0	27.0	16.00	13.00
	T*9X*D20	24.5	HD48	1260	35.2	26.2	15.75	12.75
	T*9X*D20	24.5	UC60D	1285	34.4	25.6	15.50	12.75
	C*(8,L)C*A12	14.5	FC/MC/PC37A	1150	34.2	24.8	14.95	12.40
	C*(8,L)C*B12	17.5	FC/MC/PC43B	1275	34.8	26.0	14.90	12.50
	C*(8,L)C*B12	17.5	HD48	1210	34.8	25.6	15.25	12.50
	C*(8,L)C*C16	21.0	FC/MC/PC43C	1205	35.0	25.8	15.75	13.00
	C*(8,L)C*C16	21.0	FC/MC/PC48C	1210	35.6	26.2	16.00	13.25
	C*(8,L)C*C16	21.0	FC/PC60C	1185	35.0	25.8	16.40	13.45

For notes see Page 19.

COOLING CAPACITY - With High Efficiency Motor Furnaces (Continued)

UNIT MODEL	FURNACE		COIL MODEL[1]	COOLING				
	MODEL	WIDTH		RATED CFM	NET MBH		SEER	EER
					TOTAL	SENS.		
14.5 SEER AC WITH HIGH EFFICIENCY MOTOR FURNACES [2]								
TCGF36S41S3(E)	C*(8,L)C*C16	21.0	HD48	1210	35.2	25.8	16.00	13.25
	C*(8,L)C*C16	21.0	UC60C	1195	34.2	24.6	15.75	13.15
	C*(8,L)C*C20	21.0	FC/MC/PC43C	1190	34.6	25.8	15.90	13.10
	C*(8,L)C*C20	21.0	FC/MC/PC48C	1155	35.6	26.4	16.25	13.50
	C*(8,L)C*C20	21.0	FC/PC60C	1215	35.4	26.0	16.20	13.50
	C*(8,L)C*C20	21.0	HD48	1155	35.2	26.0	16.00	13.25
	C*(8,L)C*C20	21.0	UC60C	1215	34.2	24.6	15.70	13.10
	C*9C*B12	17.5	FC/MC/PC43B	1200	34.6	25.4	14.75	12.25
	C*9C*B12	17.5	HD48	1150	34.8	25.6	15.25	12.50
	C*9C*C16	21.0	FC/MC/PC43C	1240	34.8	25.6	15.25	12.75
	C*9C*C16	21.0	FC/MC/PC48C	1195	35.4	26.2	15.75	13.00
	C*9C*C16	21.0	FC/PC60C	1235	35.0	25.8	15.50	13.00
	C*9C*C16	21.0	HD48	1195	35.0	25.8	15.75	13.00
	C*9C*C16	21.0	UC60C	1235	33.8	24.4	15.00	12.55
	C*9C*C20	21.0	FC/MC/PC43C	1200	35.0	25.6	15.50	13.00
	C*9C*C20	21.0	FC/MC/PC48C	1330	35.8	27.2	15.50	12.75
	C*9C*C20	21.0	FC/PC60C	1330	35.6	27.2	15.65	13.15
	C*9C*C20	21.0	HD48	1325	35.4	26.4	15.25	12.75
	C*9C*C20	21.0	UC60C	1285	34.4	25.6	15.15	12.70
	C*9C*D20	24.5	FC/MC/PC60D	1225	35.2	26.0	15.95	13.35
	C*9C*D20	24.5	FC/MC62D	1235	35.6	26.4	16.00	13.50
	C*9C*D20	24.5	FC64D	1235	36.0	27.0	16.00	13.00
	C*9C*D20	24.5	UC60D	1225	34.0	24.6	15.45	12.90
TCGF42S41S3(E)	T*(8,L)V*B12	17.5	HD48	1350	41.0	29.8	14.75	12.50
	T*(8,L)V*C16	21.0	FC/MC/PC43C	1425	41.5	30.8	14.50	12.50
	T*(8,L)V*C16	21.0	FC/MC/PC48C	1330	41.0	30.6	15.30	12.90
	T*(8,L)V*C16	21.0	FC/PC60C	1420	42.0	31.5	15.45	13.15
	T*(8,L)V*C16	21.0	FC64D	1420	42.0	31.8	16.00	13.00
	T*(8,L)V*C16	21.0	HD48	1435	41.5	30.8	15.25	13.00
	T*(8,L)V*C16	21.0	HD60	1420	42.0	31.4	15.55	13.30
	T*(8,L)V*C16	21.0	UC48C	1435	40.5	30.8	14.90	12.65
	T*(8,L)V*C16	21.0	UC60C	1420	40.5	29.8	15.00	12.75
	T*(8,L)V*C20	21.0	FC/MC/PC43C	1450	41.5	30.8	14.50	12.50
	T*(8,L)V*C20	21.0	FC/MC/PC48C	1410	41.5	31.4	15.55	13.10
	T*(8,L)V*C20	21.0	FC/PC60C	1340	42.0	31.1	15.70	13.40
	T*(8,L)V*C20	21.0	FC64D	1410	42.0	31.8	16.00	13.00
	T*(8,L)V*C20	21.0	HD48	1410	42.0	31.0	15.25	13.00
	T*(8,L)V*C20	21.0	HD60	1410	42.0	31.4	15.85	13.50
	T*(8,L)V*C20	21.0	UC48C	1410	40.5	31.0	15.10	12.80
	T*(8,L)V*C20	21.0	UC60C	1410	40.5	30.0	15.30	13.00
	T*(8,L)X*B12	17.5	FC/MC/PC43B	1300	40.5	30.0	14.75	12.50
	T*(8,L)X*C16	21.0	FC/MC/PC43C	1475	41.5	31.8	14.75	12.50
	T*(8,L)X*C16	21.0	FC/MC/PC48C	1360	42.0	31.2	15.25	12.75
	T*(8,L)X*C16	21.0	FC/MC62D	1360	42.0	31.5	16.00	13.00
	T*(8,L)X*C16	21.0	FC/PC60C	1360	41.5	31.4	15.00	12.50
	T*(8,L)X*C16	21.0	FC64D	1360	42.0	31.8	16.00	13.00
	T*(8,L)X*C16	21.0	HD48	1340	41.5	31.0	15.00	12.75
	T*(8,L)X*C16	21.0	UC48C	1400	40.0	29.8	14.90	12.65
	T*(8,L)X*C20	21.0	FC/MC/PC43C	1415	41.5	31.4	14.75	12.50
	T*(8,L)X*C20	21.0	FC/MC/PC48C	1475	42.0	31.8	15.25	12.75
	T*(8,L)X*C20	21.0	FC/MC/PC60D	1485	41.5	31.4	15.00	12.50

For notes see Page 19.

COOLING CAPACITY - With High Efficiency Motor Furnaces (Continued)

UNIT MODEL	FURNACE		COIL MODEL[1]	COOLING				
	MODEL	WIDTH		RATED CFM	NET MBH		SEER	EER
					TOTAL	SENS.		
14.5 SEER AC WITH HIGH EFFICIENCY MOTOR FURNACES [2]								
TCGF42S41S3(E)	T*(8,L)X*C20	21.0	FC/MC62D	1360	42.0	31.5	16.00	13.00
	T*(8,L)X*C20	21.0	FC64D	1485	42.0	32.6	16.00	13.00
	T*(8,L)X*C20	21.0	UC48C	1515	40.5	30.8	14.90	12.65
	T*9(C,V)*B12	17.5	HD48	1150	40.0	28.2	14.75	12.50
	T*9(C,V)*C16	21.0	FC/MC/PC43C	1360	41.0	30.8	14.50	12.50
	T*9(C,V)*C16	21.0	FC/MC/PC48C	1395	42.0	31.4	15.25	13.00
	T*9(C,V)*C16	21.0	FC/PC60C	1445	41.5	31.0	14.75	12.60
	T*9(C,V)*C16	21.0	FC64D	1445	42.0	31.8	15.25	12.65
	T*9(C,V)*C16	21.0	HD48	1395	41.5	30.8	15.00	12.75
	T*9(C,V)*C16	21.0	HD60	1445	42.0	31.2	14.85	12.75
	T*9(C,V)*C16	21.0	UC48C	1395	40.0	30.8	14.70	12.45
	T*9(C,V)*C16	21.0	UC60C	1445	40.0	29.6	14.35	12.25
	T*9(C,V)*C20	21.0	FC/MC/PC43C	1395	41.5	30.8	14.50	12.50
	T*9(C,V)*C20	21.0	FC/MC/PC48C	1430	42.0	31.4	15.00	12.75
	T*9(C,V)*C20	21.0	FC/PC60C	1445	41.5	31.2	15.10	12.90
	T*9(C,V)*C20	21.0	FC64D	1445	42.0	31.8	16.00	13.00
	T*9(C,V)*C20	21.0	HD48	1430	41.5	30.8	14.75	12.50
	T*9(C,V)*C20	21.0	HD60	1445	42.0	31.4	15.20	13.00
	T*9(C,V)*C20	21.0	UC48C	1430	40.0	30.8	14.60	12.40
	T*9(C,V)*C20	21.0	UC60C	1445	40.5	29.6	14.65	12.50
	T*9(C,V)*D20	24.5	FC/MC/PC48D	1450	42.0	31.4	15.25	13.00
	T*9(C,V)*D20	24.5	FC/MC/PC60D	1445	42.0	31.2	15.30	13.05
	T*9(C,V)*D20	24.5	FC/MC62D	1455	42.0	31.6	16.00	13.00
	T*9(C,V)*D20	24.5	FC64D	1235	42.0	30.4	16.00	13.00
	T*9(C,V)*D20	24.5	HD48	1450	41.5	30.8	15.00	12.75
	T*9(C,V)*D20	24.5	HD60	1445	42.0	31.4	15.40	13.15
	T*9(C,V)*D20	24.5	UC48D	1450	40.0	30.8	14.80	12.60
	T*9(C,V)*D20	24.5	UC60D	1445	40.5	29.8	14.90	12.65
	T*9X*B12	17.5	FC/MC/PC43B	1270	40.0	29.0	14.50	12.25
	T*9X*C16	21.0	FC/MC/PC43C	1410	41.5	31.0	14.75	12.50
	T*9X*C16	21.0	FC/MC/PC48C	1425	42.0	31.8	15.00	12.50
	T*9X*C16	21.0	FC/MC62D	1450	42.0	31.5	16.00	13.00
	T*9X*C16	21.0	FC/PC60C	1460	41.5	31.2	14.75	12.50
	T*9X*C16	21.0	FC64D	1460	42.0	31.8	16.00	13.00
	T*9X*C16	21.0	HD48	1465	42.0	31.6	14.75	12.50
	T*9X*C16	21.0	UC48C	1425	39.5	29.6	14.50	12.25
	T*9X*C20	21.0	FC/MC/PC43C	1400	41.5	31.2	14.75	12.50
	T*9X*C20	21.0	FC/MC/PC48C	1420	42.0	31.8	15.00	12.50
	T*9X*C20	21.0	FC/MC62D	1450	42.0	31.5	16.00	13.00
	T*9X*C20	21.0	FC/PC60C	1460	41.5	31.4	15.00	12.75
	T*9X*C20	21.0	FC64D	1460	42.0	31.8	16.00	13.00
	T*9X*C20	21.0	HD48	1465	42.0	31.8	14.75	12.50
	T*9X*C20	21.0	UC48C	1420	40.0	29.6	14.50	12.25
	T*9X*D20	24.5	FC/MC/PC48D	1435	42.0	31.8	15.00	12.50
	T*9X*D20	24.5	FC/MC/PC60D	1515	42.0	32.2	15.00	12.75
	T*9X*D20	24.5	FC/MC62D	1450	42.0	31.5	16.00	13.00
	T*9X*D20	24.5	FC64D	1225	42.0	30.4	16.00	13.00
	T*9X*D20	24.5	HD48	1460	47.5	27.4	14.75	12.50
	T*9X*D20	24.5	UC48D	1435	40.0	29.8	14.50	12.25
	C*(8,L)C*B12	17.5	HD48	1350	41.0	29.8	14.75	12.50
	C*(8,L)C*C16	21.0	FC/MC/PC43C	1425	41.5	30.8	14.50	12.50

For notes see Page 19.

COOLING CAPACITY - With High Efficiency Motor Furnaces (Continued)

UNIT MODEL	FURNACE		COIL MODEL[1]	COOLING				
	MODEL	WIDTH		RATED CFM	NET MBH		SEER	EER
					TOTAL	SENS.		
14.5 SEER AC WITH HIGH EFFICIENCY MOTOR FURNACES [2]								
TCGF42S41S3(E)	C*(8,L)C*C16	21.0	FC/MC/PC48C	1330	41.0	30.6	15.30	12.90
	C*(8,L)C*C16	21.0	FC/PC60C	1420	42.0	31.5	15.45	13.15
	C*(8,L)C*C16	21.0	FC64D	1420	42.0	31.8	16.00	13.00
	C*(8,L)C*C16	21.0	HD48	1435	41.5	30.8	15.25	13.00
	C*(8,L)C*C16	21.0	HD60	1420	42.0	31.4	15.55	13.30
	C*(8,L)C*C16	21.0	UC48C	1435	40.5	30.8	14.90	12.65
	C*(8,L)C*C16	21.0	UC60C	1420	40.5	29.8	15.00	12.75
	C*(8,L)C*C20	21.0	FC/MC/PC43C	1450	41.5	30.8	14.50	12.50
	C*(8,L)C*C20	21.0	FC/MC/PC48C	1410	41.5	31.4	15.55	13.10
	C*(8,L)C*C20	21.0	FC/PC60C	1340	42.0	31.1	15.70	13.40
	C*(8,L)C*C20	21.0	FC64D	1410	42.0	31.8	16.00	13.00
	C*(8,L)C*C20	21.0	HD48	1410	42.0	31.0	15.25	13.00
	C*(8,L)C*C20	21.0	HD60	1410	42.0	31.4	15.85	13.50
	C*(8,L)C*C20	21.0	UC48C	1410	40.5	31.0	15.10	12.80
	C*(8,L)C*C20	21.0	UC60C	1410	40.5	30.0	15.30	13.00
	C*9C*B12	17.5	HD48	1150	40.0	28.2	14.75	12.50
	C*9C*C16	21.0	FC/MC/PC43C	1360	41.0	30.8	14.50	12.50
	C*9C*C16	21.0	FC/MC/PC48C	1395	42.0	31.4	15.25	13.00
	C*9C*C16	21.0	FC/PC60C	1445	41.5	31.0	14.75	12.60
	C*9C*C16	21.0	FC64D	1445	42.0	31.8	15.25	12.65
	C*9C*C16	21.0	HD48	1395	41.5	30.8	15.00	12.75
	C*9C*C16	21.0	HD60	1445	42.0	31.2	14.85	12.75
	C*9C*C16	21.0	UC48C	1395	40.0	30.8	14.70	12.45
	C*9C*C16	21.0	UC60C	1445	40.0	29.6	14.35	12.25
	C*9C*C20	21.0	FC/MC/PC43C	1395	41.5	30.8	14.50	12.50
	C*9C*C20	21.0	FC/MC/PC48C	1430	42.0	31.4	15.00	12.75
	C*9C*C20	21.0	FC/PC60C	1445	41.5	31.2	15.10	12.90
	C*9C*C20	21.0	FC64D	1445	42.0	31.8	16.00	13.00
	C*9C*C20	21.0	HD48	1430	41.5	30.8	14.75	12.50
	C*9C*C20	21.0	HD60	1445	42.0	31.4	15.20	13.00
	C*9C*C20	21.0	UC48C	1430	40.0	30.8	14.60	12.40
	C*9C*C20	21.0	UC60C	1445	40.5	29.6	14.65	12.50
	C*9C*D20	24.5	FC/MC/PC48D	1450	42.0	31.4	15.25	13.00
	C*9C*D20	24.5	FC/MC/PC60D	1445	42.0	31.2	15.30	13.05
	C*9C*D20	24.5	FC/MC62D	1455	42.0	31.6	16.00	13.00
	C*9C*D20	24.5	FC64D	1235	42.0	30.4	16.00	13.00
	C*9C*D20	24.5	HD48	1450	41.5	30.8	15.00	12.75
	C*9C*D20	24.5	HD60	1445	42.0	31.4	15.40	13.15
	C*9C*D20	24.5	UC48D	1450	40.0	30.8	14.80	12.60
	C*9C*D20	24.5	UC60D	1445	40.5	29.8	14.90	12.65
TCGF48S41S4(E)	T*(8,L)C*C16	21.0	FC/MC/PC48C	1565	44.5	32.8	14.25	11.75
	T*(8,L)C*C16	21.0	FC/MC/PC48D	1565	44.5	32.8	14.25	11.75
	T*(8,L)C*C16	21.0	FC/MC/PC60D	1600	45.5	32.0	14.50	12.00
	T*(8,L)C*C16	21.0	FC/MC62D	1635	46.5	33.4	15.00	12.25
	T*(8,L)C*C16	21.0	FC/PC60C	1600	45.5	32.0	14.50	12.00
	T*(8,L)C*C16	21.0	FC64D	1635	47.0	34.0	15.25	12.50
	T*(8,L)C*C16	21.0	HD60	1625	47.0	32.6	15.00	12.50
	T*(8,L)C*C16	21.0	UC48C	1615	44.5	33.0	14.50	12.00
	T*(8,L)C*C16	21.0	UC60C	1625	45.5	32.0	14.75	12.00
	T*(8,L)C*C20	21.0	FC/MC/PC48C	1640	45.0	33.0	14.50	12.00
	T*(8,L)C*C20	21.0	FC/MC/PC48D	1640	45.0	33.0	14.50	12.00

For notes see Page 19.

COOLING CAPACITY - With High Efficiency Motor Furnaces (Continued)

UNIT MODEL	FURNACE		COIL MODEL[1]	COOLING				
	MODEL	WIDTH		RATED CFM	NET MBH		SEER	EER
					TOTAL	SENS.		
14.5 SEER AC WITH HIGH EFFICIENCY MOTOR FURNACES [2]								
TCGF48S41S4(E)	T*(8,L)C*C20	21.0	FC/MC/PC60D	1625	45.5	32.0	14.75	12.00
	T*(8,L)C*C20	21.0	FC/MC62D	1620	46.5	33.6	15.25	12.50
	T*(8,L)C*C20	21.0	FC/PC60C	1625	45.5	32.0	14.75	12.00
	T*(8,L)C*C20	21.0	FC64D	1410	46.0	32.0	15.75	13.00
	T*(8,L)C*C20	21.0	HD60	1605	47.0	32.8	15.50	12.75
	T*(8,L)C*C20	21.0	UC48C	1640	44.5	33.0	14.50	11.75
	T*(8,L)C*C20	21.0	UC60C	1605	45.5	32.2	15.00	12.25
	T*(8,L)V*C16	21.0	FC/MC/PC48C	1565	44.5	32.8	14.25	11.75
	T*(8,L)V*C16	21.0	FC/MC/PC48D	1565	44.5	32.8	14.25	11.75
	T*(8,L)V*C16	21.0	FC/MC/PC60D	1600	45.5	32.0	14.50	12.00
	T*(8,L)V*C16	21.0	FC/MC62D	1635	46.5	33.4	15.00	12.25
	T*(8,L)V*C16	21.0	FC/PC60C	1600	45.5	32.0	14.50	12.00
	T*(8,L)V*C16	21.0	FC64D	1635	47.0	34.0	15.25	12.50
	T*(8,L)V*C16	21.0	HD60	1625	47.0	32.6	15.00	12.50
	T*(8,L)V*C16	21.0	UC48C	1615	44.5	33.0	14.50	12.00
	T*(8,L)V*C16	21.0	UC60C	1625	45.5	32.0	14.75	12.00
	T*(8,L)V*C20	21.0	FC/MC/PC48C	1640	45.0	33.0	14.50	12.00
	T*(8,L)V*C20	21.0	FC/MC/PC48D	1640	45.0	33.0	14.50	12.00
	T*(8,L)V*C20	21.0	FC/MC/PC60D	1625	45.5	32.0	14.75	12.00
	T*(8,L)V*C20	21.0	FC/MC62D	1620	46.5	33.6	15.25	12.50
	T*(8,L)V*C20	21.0	FC/PC60C	1625	45.5	32.0	14.75	12.00
	T*(8,L)V*C20	21.0	FC64D	1410	46.0	32.0	15.75	13.00
	T*(8,L)V*C20	21.0	HD60	1605	47.0	32.8	15.50	12.75
	T*(8,L)V*C20	21.0	UC48C	1640	44.5	33.0	14.50	11.75
	T*(8,L)V*C20	21.0	UC60C	1605	45.5	32.2	15.00	12.25
	T*(8,L)X*C16	21.0	FC/MC/PC48C	1600	45.0	33.2	15.00	12.25
	T*(8,L)X*C16	21.0	FC/MC/PC48D	1600	45.0	33.2	15.00	12.25
	T*(8,L)X*C16	21.0	FC/MC/PC60D	1605	46.0	32.2	15.00	12.25
	T*(8,L)X*C16	21.0	FC/MC62D	1360	46.0	31.2	16.00	13.00
	T*(8,L)X*C16	21.0	FC/PC60C	1605	46.0	32.2	15.00	12.25
	T*(8,L)X*C16	21.0	FC64D	1360	46.5	32.2	16.25	13.25
	T*(8,L)X*C16	21.0	HD60	1610	47.0	32.8	15.50	12.75
	T*(8,L)X*C16	21.0	UC48C	1600	45.0	33.2	15.00	12.25
	T*(8,L)X*C16	21.0	UC60C	1605	45.5	32.2	15.00	12.25
	T*(8,L)X*C20	21.0	FC/MC/PC48C	1660	45.0	33.2	15.25	12.50
	T*(8,L)X*C20	21.0	FC/MC/PC48D	1660	45.0	33.2	15.25	12.50
	T*(8,L)X*C20	21.0	FC/MC/PC60D	1595	46.0	32.2	15.00	12.50
	T*(8,L)X*C20	21.0	FC/MC62D	1665	47.0	33.8	15.50	12.75
	T*(8,L)X*C20	21.0	FC/PC60C	1595	46.0	32.2	15.00	12.50
	T*(8,L)X*C20	21.0	FC64D	1665	47.5	34.2	15.75	13.00
	T*(8,L)X*C20	21.0	HD60	1665	47.5	32.8	15.50	12.75
	T*(8,L)X*C20	21.0	UC48C	1515	45.0	33.0	16.00	13.00
	T*(8,L)X*C20	21.0	UC60C	1540	46.0	32.6	16.00	13.00
	T*9(C,V)*C16	21.0	FC/MC/PC48C	1590	44.5	33.0	14.50	11.75
	T*9(C,V)*C16	21.0	FC/MC/PC48D	1590	44.5	33.0	14.50	11.75
	T*9(C,V)*C16	21.0	FC/MC/PC60D	1590	45.5	32.0	14.50	12.00
	T*9(C,V)*C16	21.0	FC/MC62D	1590	46.5	33.4	14.75	12.25
	T*9(C,V)*C16	21.0	FC/PC60C	1590	45.5	32.0	14.50	12.00
	T*9(C,V)*C16	21.0	FC64D	1590	47.0	34.0	15.00	12.50
	T*9(C,V)*C16	21.0	HD60	1590	47.0	32.6	14.75	12.25
	T*9(C,V)*C16	21.0	UC48C	1590	44.5	33.0	14.50	11.75

For notes see Page 19.

COOLING CAPACITY - With High Efficiency Motor Furnaces (Continued)

UNIT MODEL	FURNACE		COIL MODEL[1]	COOLING				
	MODEL	WIDTH		RATED CFM	NET MBH		SEER	EER
					TOTAL	SENS.		
14.5 SEER AC WITH HIGH EFFICIENCY MOTOR FURNACES [2]								
TCGF48S41S4(E)	T*9(C,V)*C16	21.0	UC60C	1590	45.5	32.0	14.25	11.75
	T*9(C,V)*C20	21.0	FC/MC/PC48C	1655	44.5	33.0	14.25	11.75
	T*9(C,V)*C20	21.0	FC/MC/PC48D	1655	44.5	33.0	14.25	11.75
	T*9(C,V)*C20	21.0	FC/MC/PC60D	1655	45.5	32.0	14.50	12.00
	T*9(C,V)*C20	21.0	FC/MC62D	1655	46.0	33.4	14.50	12.00
	T*9(C,V)*C20	21.0	FC/PC60C	1655	45.5	32.0	14.50	12.00
	T*9(C,V)*C20	21.0	FC64D	1655	46.5	33.8	14.75	12.25
	T*9(C,V)*C20	21.0	HD60	1655	47.0	32.6	14.75	12.25
	T*9(C,V)*C20	21.0	UC48C	1655	44.5	33.0	14.50	11.75
	T*9(C,V)*C20	21.0	UC60C	1655	45.5	32.0	14.25	11.75
	T*9(C,V)*D20	24.5	FC/MC/PC48D	1645	44.5	33.0	14.25	11.75
	T*9(C,V)*D20	24.5	FC/MC/PC60D	1615	45.5	32.0	14.50	12.00
	T*9(C,V)*D20	24.5	FC/MC62D	1630	46.5	33.4	14.75	12.25
	T*9(C,V)*D20	24.5	FC64D	1630	47.0	34.0	15.00	12.50
	T*9(C,V)*D20	24.5	HD60	1615	47.0	32.6	15.00	12.25
	T*9(C,V)*D20	24.5	UC48D	1645	44.5	33.0	14.50	11.75
	T*9(C,V)*D20	24.5	UC60D	1615	45.5	32.0	14.50	12.00
	T*9X*C16	21.0	FC/MC/PC48C	1565	45.0	33.2	15.00	12.25
	T*9X*C16	21.0	FC/MC/PC48D	1565	45.0	33.2	15.00	12.25
	T*9X*C16	21.0	FC/MC/PC60D	1575	46.0	32.2	15.00	12.25
	T*9X*C16	21.0	FC/MC62D	1550	46.5	33.6	15.25	12.50
	T*9X*C16	21.0	FC/PC60C	1575	46.0	32.2	15.00	12.25
	T*9X*C16	21.0	FC64D	1550	47.0	34.0	15.50	12.75
	T*9X*C16	21.0	HD60	1575	47.0	32.8	15.25	12.75
	T*9X*C16	21.0	UC48C	1565	45.0	33.2	15.00	12.25
	T*9X*C16	21.0	UC60C	1575	45.5	32.2	15.00	12.25
	T*9X*C20	21.0	FC/MC/PC48C	1615	45.0	33.2	15.25	12.50
	T*9X*C20	21.0	FC/MC/PC48D	1615	45.0	33.2	15.25	12.50
	T*9X*C20	21.0	FC/MC/PC60D	1625	46.0	32.2	15.25	12.50
	T*9X*C20	21.0	FC/MC62D	1595	46.5	33.6	15.50	12.75
	T*9X*C20	21.0	FC/PC60C	1625	46.0	32.2	15.25	12.50
	T*9X*C20	21.0	FC64D	1595	47.0	34.2	15.75	13.00
	T*9X*C20	21.0	HD60	1625	47.5	32.8	15.50	12.75
	T*9X*C20	21.0	UC48C	1615	45.0	33.2	15.25	12.50
	T*9X*C20	21.0	UC60C	1625	45.5	32.2	15.00	12.50
	T*9X*D20	24.5	FC/MC/PC48D	1635	45.0	33.2	15.00	12.25
	T*9X*D20	24.5	FC/MC/PC60D	1490	46.0	31.8	15.75	13.00
	T*9X*D20	24.5	FC/MC62D	1425	45.5	31.2	15.75	13.00
	T*9X*D20	24.5	FC64D	1425	46.5	32.0	16.00	13.25
	T*9X*D20	24.5	HD60	1645	47.0	32.8	15.25	12.75
	T*9X*D20	24.5	UC48D	1635	45.0	33.2	15.00	12.25
	T*9X*D20	24.5	UC60D	1490	45.5	31.8	15.75	13.00
	C*(8,L)C*C16	21.0	FC/MC/PC48C	1565	44.5	32.8	14.25	11.75
	C*(8,L)C*C16	21.0	FC/MC/PC48D	1565	44.5	32.8	14.25	11.75
	C*(8,L)C*C16	21.0	FC/MC/PC60D	1600	45.5	32.0	14.50	12.00
	C*(8,L)C*C16	21.0	FC/MC62D	1635	46.5	33.4	15.00	12.25
	C*(8,L)C*C16	21.0	FC/PC60C	1600	45.5	32.0	14.50	12.00
	C*(8,L)C*C16	21.0	FC64D	1635	47.0	34.0	15.25	12.50
	C*(8,L)C*C16	21.0	HD60	1625	47.0	32.6	15.00	12.50
	C*(8,L)C*C16	21.0	UC48C	1615	44.5	33.0	14.50	12.00
	C*(8,L)C*C16	21.0	UC60C	1625	45.5	32.0	14.75	12.00

For notes see Page 19.

COOLING CAPACITY - With High Efficiency Motor Furnaces (Continued)

UNIT MODEL	FURNACE		COIL MODEL[1]	COOLING				
	MODEL	WIDTH		RATED CFM	NET MBH		SEER	EER
					TOTAL	SENS.		
14.5 SEER AC WITH HIGH EFFICIENCY MOTOR FURNACES [2]								
TCGF48S41S4(E)	C*(8,L)C*C20	21.0	FC/MC/PC48C	1640	45.0	33.0	14.50	12.00
	C*(8,L)C*C20	21.0	FC/MC/PC48D	1640	45.0	33.0	14.50	12.00
	C*(8,L)C*C20	21.0	FC/MC/PC60D	1625	45.5	32.0	14.75	12.00
	C*(8,L)C*C20	21.0	FC/MC62D	1620	46.5	33.6	15.25	12.50
	C*(8,L)C*C20	21.0	FC/PC60C	1625	45.5	32.0	14.75	12.00
	C*(8,L)C*C20	21.0	FC64D	1410	46.0	32.0	15.75	13.00
	C*(8,L)C*C20	21.0	HD60	1605	47.0	32.8	15.50	12.75
	C*(8,L)C*C20	21.0	UC48C	1640	44.5	33.0	14.50	11.75
	C*(8,L)C*C20	21.0	UC60C	1605	45.5	32.2	15.00	12.25
	C*9C*C16	21.0	FC/MC/PC48C	1590	44.5	33.0	14.50	11.75
	C*9C*C16	21.0	FC/MC/PC48D	1590	44.5	33.0	14.50	11.75
	C*9C*C16	21.0	FC/MC/PC60D	1590	45.5	32.0	14.50	12.00
	C*9C*C16	21.0	FC/MC62D	1590	46.5	33.4	14.75	12.25
	C*9C*C16	21.0	FC/PC60C	1590	45.5	32.0	14.50	12.00
	C*9C*C16	21.0	FC64D	1590	47.0	34.0	15.00	12.50
	C*9C*C16	21.0	HD60	1590	47.0	32.6	14.75	12.25
	C*9C*C16	21.0	UC48C	1590	44.5	33.0	14.50	11.75
	C*9C*C16	21.0	UC60C	1590	45.5	32.0	14.25	11.75
	C*9C*C20	21.0	FC/MC/PC48C	1655	44.5	33.0	14.25	11.75
	C*9C*C20	21.0	FC/MC/PC48D	1655	44.5	33.0	14.25	11.75
	C*9C*C20	21.0	FC/MC/PC60D	1655	45.5	32.0	14.50	12.00
	C*9C*C20	21.0	FC/MC62D	1655	46.0	33.4	14.50	12.00
	C*9C*C20	21.0	FC/PC60C	1655	45.5	32.0	14.50	12.00
	C*9C*C20	21.0	FC64D	1655	46.5	33.8	14.75	12.25
	C*9C*C20	21.0	HD60	1655	47.0	32.6	14.75	12.25
	C*9C*C20	21.0	UC48C	1655	44.5	33.0	14.50	11.75
	C*9C*C20	21.0	UC60C	1655	45.5	32.0	14.25	11.75
	C*9C*D20	24.5	FC/MC/PC48D	1645	44.5	33.0	14.25	11.75
	C*9C*D20	24.5	FC/MC/PC60D	1615	45.5	32.0	14.50	12.00
	C*9C*D20	24.5	FC/MC62D	1630	46.5	33.4	14.75	12.25
	C*9C*D20	24.5	FC64D	1630	47.0	34.0	15.00	12.50
	C*9C*D20	24.5	HD60	1615	47.0	32.6	15.00	12.25
	C*9C*D20	24.5	UC48D	1645	44.5	33.0	14.50	11.75
	C*9C*D20	24.5	UC60D	1615	45.5	32.0	14.50	12.00
TCGF60S41S4(E)	T*(8,L)C*C16	21.0	FC/PC60C	1600	54.5	35.8	14.00	12.00
	T*(8,L)C*C20	21.0	FC/MC/PC60D	1600	54.5	36.0	14.25	12.25
	T*(8,L)C*C20	21.0	FC/MC62D	1620	55.5	37.4	14.50	12.50
	T*(8,L)C*C20	21.0	FC/PC60C	1600	54.5	36.0	14.25	12.25
	T*(8,L)C*C20	21.0	FC64D	1630	56.5	39.5	14.75	12.75
	T*(8,L)C*C20	21.0	HD60	1605	56.0	37.0	14.50	12.50
	T*(8,L)C*C20	21.0	UC60C	1605	54.5	36.0	14.25	12.25
	T*(8,L)V*C16	21.0	FC/PC60C	1600	54.5	35.8	14.00	12.00
	T*(8,L)V*C20	21.0	FC/MC/PC60D	1600	54.5	36.0	14.25	12.25
	T*(8,L)V*C20	21.0	FC/MC62D	1620	55.5	37.4	14.50	12.50
	T*(8,L)V*C20	21.0	FC/PC60C	1600	54.5	36.0	14.25	12.25
	T*(8,L)V*C20	21.0	FC64D	1630	56.5	39.5	14.75	12.75
	T*(8,L)V*C20	21.0	HD60	1605	56.0	37.0	14.50	12.50
	T*(8,L)V*C20	21.0	UC60C	1605	54.5	36.0	14.25	12.25
	T*(8,L)X*C16	21.0	FC/PC60C	1605	54.5	36.2	14.25	12.25
	T*(8,L)X*C16	21.0	UC60C	1605	54.5	36.0	14.25	12.25
	T*(8,L)X*C20	21.0	FC/MC/PC60D	1690	55.5	37.4	14.75	12.50

For notes see Page 19.

COOLING CAPACITY - With High Efficiency Motor Furnaces (Continued)

UNIT MODEL	FURNACE		COIL MODEL[1]	COOLING				
	MODEL	WIDTH		RATED CFM	NET MBH		SEER	EER
					TOTAL	SENS.		
14.5 SEER AC WITH HIGH EFFICIENCY MOTOR FURNACES [2]								
TCGF60S41S4(E)	T*(8,L)X*C20	21.0	FC/MC62D	1665	56.0	38.1	14.75	12.75
	T*(8,L)X*C20	21.0	FC/PC60C	1595	54.5	36.0	14.50	12.25
	T*(8,L)X*C20	21.0	FC64D	1665	57.0	40.0	15.00	13.00
	T*(8,L)X*C20	21.0	HD60	1665	56.5	37.6	14.75	12.75
	T*(8,L)X*C20	21.0	UC60C	1595	54.5	36.0	14.50	12.25
	T*(8,L)X*C20	21.0	UC60D	1690	55.0	37.2	14.75	12.50
	T*9(C,V)*C20	21.0	FC/MC/PC60D	1655	55.0	37.2	14.00	12.00
	T*9(C,V)*C20	21.0	FC/MC62D	1655	55.5	37.4	14.00	12.00
	T*9(C,V)*C20	21.0	FC/PC60C	1655	55.0	37.2	14.00	12.00
	T*9(C,V)*C20	21.0	FC64D	1655	56.5	39.0	14.25	12.25
	T*9(C,V)*C20	21.0	HD60	1655	56.0	37.2	14.25	12.25
	T*9(C,V)*C20	21.0	UC60C	1655	54.5	36.2	14.00	12.00
	T*9(C,V)*D20	24.5	FC/MC/PC60D	1615	54.5	36.0	14.00	12.00
	T*9(C,V)*D20	24.5	FC/MC62D	1630	55.5	37.2	14.25	12.25
	T*9(C,V)*D20	24.5	FC64D	1630	56.5	39.0	14.50	12.50
	T*9(C,V)*D20	24.5	HD60	1615	55.5	36.8	14.25	12.25
	T*9(C,V)*D20	24.5	UC60D	1615	54.5	36.0	14.00	12.00
	T*9X*C16	21.0	FC/PC60C	1575	54.5	35.8	14.25	12.25
	T*9X*C16	21.0	UC60C	1575	54.5	35.8	14.25	12.25
	T*9X*C20	21.0	FC/MC/PC60D	1645	55.5	37.4	14.75	12.50
	T*9X*C20	21.0	FC/MC62D	1595	55.5	37.2	14.75	12.50
	T*9X*C20	21.0	FC/PC60C	1625	55.0	36.4	14.50	12.50
	T*9X*C20	21.0	FC64D	1595	56.5	39.0	14.75	12.75
	T*9X*C20	21.0	HD60	1625	56.0	37.2	14.75	12.75
	T*9X*C20	21.0	UC60C	1625	54.5	36.4	14.50	12.25
	T*9X*C20	21.0	UC60D	1645	55.0	36.6	14.50	12.50
	T*9X*D20	24.5	FC/MC/PC60D	1730	55.5	37.4	14.75	12.50
	T*9X*D20	24.5	FC/MC62D	1645	55.5	37.6	14.50	12.50
	T*9X*D20	24.5	FC64D	1645	56.5	39.5	14.75	12.75
	T*9X*D20	24.5	HD60	1645	56.0	37.4	14.75	12.50
	T*9X*D20	24.5	UC60D	1730	55.5	38.1	14.75	12.75
	C*(8,L)C*C16	21.0	FC/PC60C	1600	54.5	35.8	14.00	12.00
	C*(8,L)C*C20	21.0	FC/MC/PC60D	1600	54.5	36.0	14.25	12.25
	C*(8,L)C*C20	21.0	FC/MC62D	1620	55.5	37.4	14.50	12.50
	C*(8,L)C*C20	21.0	FC/PC60C	1600	54.5	36.0	14.25	12.25
	C*(8,L)C*C20	21.0	FC64D	1630	56.5	39.5	14.75	12.75
	C*(8,L)C*C20	21.0	HD60	1605	56.0	37.0	14.50	12.50
	C*(8,L)C*C20	21.0	UC60C	1605	54.5	36.0	14.25	12.25
	C*9C*C20	21.0	FC/MC/PC60D	1655	55.0	37.2	14.00	12.00
	C*9C*C20	21.0	FC/MC62D	1655	55.5	37.4	14.00	12.00
	C*9C*C20	21.0	FC/PC60C	1655	55.0	37.2	14.00	12.00
	C*9C*C20	21.0	FC64D	1655	56.5	39.0	14.25	12.25
	C*9C*C20	21.0	HD60	1655	56.0	37.2	14.25	12.25
	C*9C*C20	21.0	UC60C	1655	54.5	36.2	14.00	12.00
	C*9C*D20	24.5	FC/MC/PC60D	1615	54.5	36.0	14.00	12.00
	C*9C*D20	24.5	FC/MC62D	1630	55.5	37.2	14.25	12.25
	C*9C*D20	24.5	FC64D	1630	56.5	39.0	14.50	12.50
	C*9C*D20	24.5	HD60	1615	55.5	36.8	14.25	12.25
	C*9C*D20	24.5	UC60D	1615	54.5	36.0	14.00	12.00

1. MC coils available with a factory installed horizontal drain pan. See price pages for specific model number.
2. High Efficiency Motor Furnaces have B.O.D (Blower on Delay) standard.

PSC furnaces, such as the TG8S, TGLS, and TG9s, use Coil Only Ratings.

ACCESSORIES

Refer to Price Manual for specific model numbers.

Off Cycle Timer Delay - Provides a 5-minute off cycle to prevent rapid recycling of the compressor.

Start Assist Kit (S1-2SA067) - Provides increased starting torque for areas with low voltage. See Hard Start Kit Accessory Installation Manual for Hard Start Kit part number for each model.

TXV Kits - S1-1TVM series thermal expansion valves precisely meter refrigerant for optimum performance over a wide range of conditions. See System Charge table for TXV part number for each model.

Thermostats - Compatible thermostat controls are available through accessory sourcing. For optimum performance and installation, refer to the UPGNET “Low Voltage Wiring Diagram” document to select and apply controls.

SOUND POWER LEVEL - TYPICAL OCTAVE BAND SPECTRUM ((db re. 1-pW)

Models	63	125	250	500	1000	2000	4000	8000	dBA
18	67	70	66	67	68	66	60	57	72
24	67	70	68	69	70	63	60	57	73
30	67	69	67	69	72	66	59	56	74
36	70	73	63	65	69	61	56	53	71
42	71	68	65	70	70	64	58	58	73
48	68	70	66	68	68	63	60	58	72
60	68	70	65	70	73	66	64	62	76

Rated in accordance with ARI Standard 270.

TYPICAL INSTALLATION

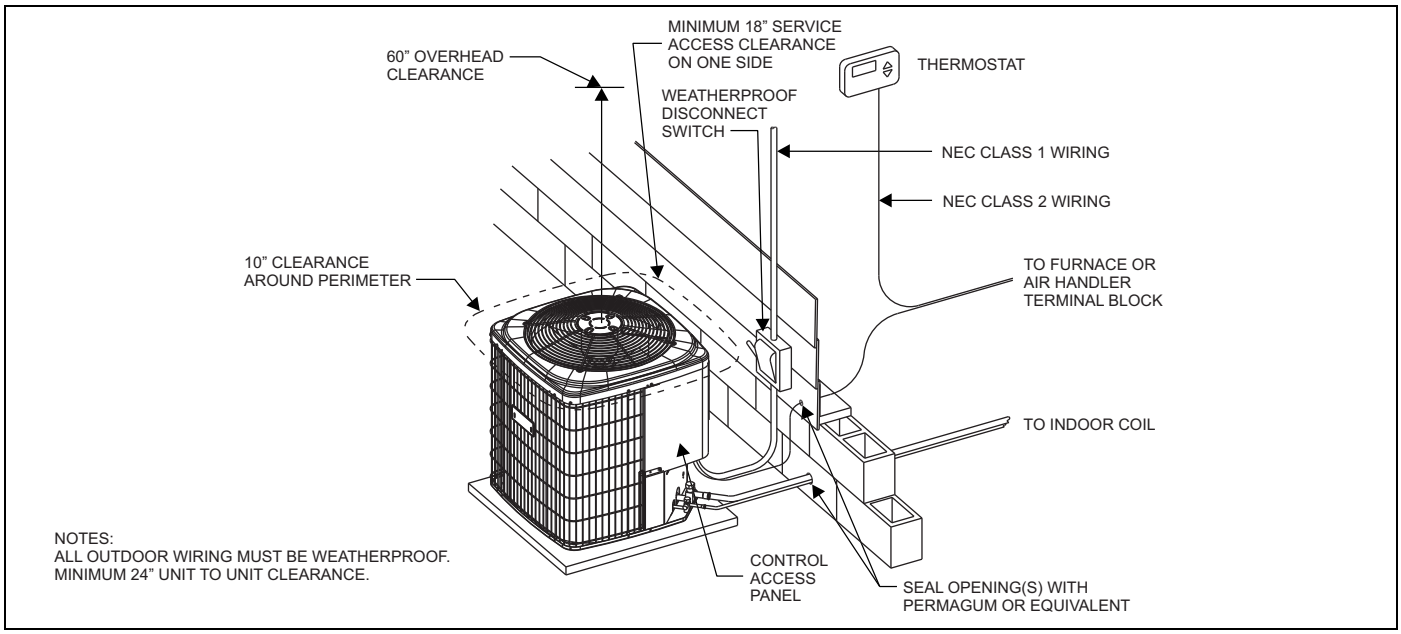

TYPICAL FIELD WIRING

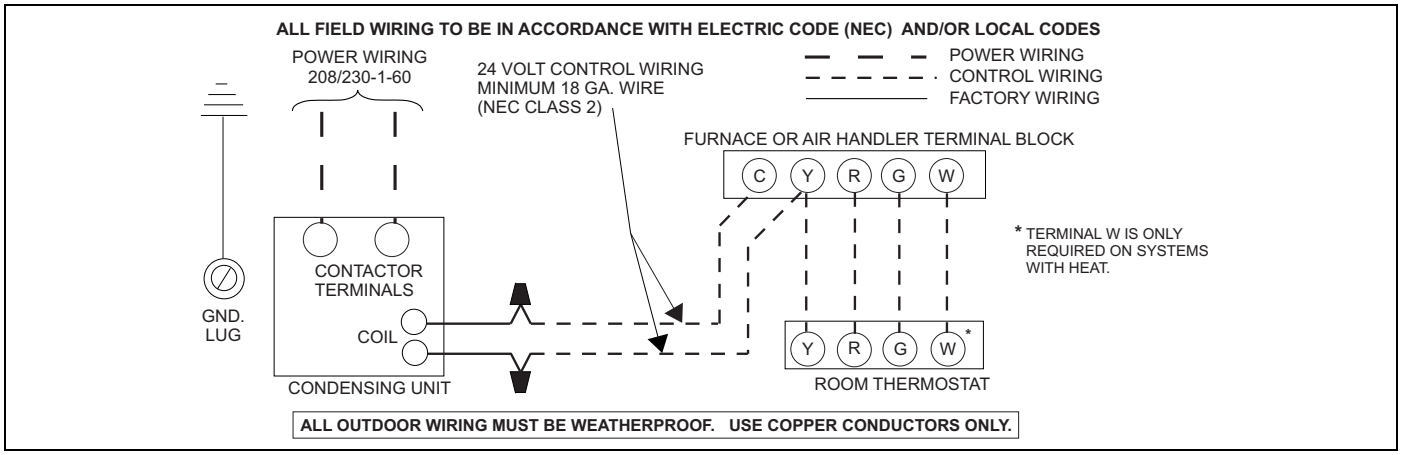

COOLING PERFORMANCE DATA																
AIR CONDITIONER MODEL NO.		TCGF18S41S3(E)														
INDOOR COIL MODEL NO.		FC/MC/PC32														
CONDENSING ENTERING AIR TEMPERATURE	IDCFM	450					600					750				
	ID DB (°F)	80	80	75	80	80	80	80	75	80	80	80	80	75	80	80
	ID WB (°F)	57	62	62	67	72	57	62	62	67	72	57	62	62	67	72
65	T.C.	16.2	17.9	17.6	20.0	22.3	18.0	18.8	18.6	20.9	23.6	19.8	19.8	19.6	21.9	25.0
	S.C.	16.2	14.9	12.3	12.8	10.1	18.0	17.3	14.2	14.5	11.4	19.8	19.7	16.1	16.3	12.6
	KW	1.00	0.98	1.00	0.99	0.98	0.99	0.99	0.99	0.98	0.97	0.99	0.99	0.99	0.97	0.96
75	T.C.	15.3	16.9	16.8	19.0	21.2	17.1	18.0	17.7	19.9	22.4	19.0	19.1	18.7	20.8	23.6
	S.C.	15.3	14.3	11.9	12.2	9.8	17.1	16.7	13.7	13.9	11.0	19.0	19.1	15.6	15.7	12.2
	KW	1.17	1.15	1.17	1.16	1.14	1.16	1.15	1.16	1.15	1.13	1.14	1.14	1.15	1.14	1.12
85	T.C.	14.4	16.0	15.9	17.9	20.2	16.3	17.1	16.8	18.8	21.2	18.1	18.3	17.7	19.8	22.3
	S.C.	14.4	13.8	11.4	11.6	9.4	16.3	16.1	13.3	13.4	10.6	18.1	18.3	15.1	15.1	11.8
	KW	1.35	1.32	1.33	1.33	1.30	1.32	1.31	1.32	1.31	1.29	1.29	1.29	1.31	1.30	1.28
95	T.C.	13.5	15.1	15.0	16.9	19.2	15.4	16.3	15.9	17.8	20.1	17.3	17.5	16.8	18.7	20.9
	S.C.	13.5	13.2	11.0	11.0	9.0	15.4	15.5	12.8	12.8	10.2	17.3	17.5	14.6	14.6	11.3
	KW	1.52	1.50	1.50	1.50	1.46	1.48	1.47	1.48	1.48	1.45	1.45	1.45	1.47	1.47	1.44
105	T.C.	12.9	14.1	13.9	15.8	18.0	14.6	15.3	14.7	16.6	18.7	16.2	16.4	15.5	17.4	19.4
	S.C.	12.9	12.7	10.5	10.6	8.6	14.6	14.7	12.2	12.4	9.6	16.2	16.4	14.0	14.2	10.7
	KW	1.80	1.79	1.81	1.80	1.74	1.77	1.75	1.78	1.77	1.74	1.73	1.72	1.75	1.74	1.73
115	T.C.	12.4	13.2	12.9	14.7	16.8	13.7	14.3	13.6	15.5	17.3	15.1	15.4	14.2	16.2	17.9
	S.C.	12.4	12.3	10.1	10.2	8.2	13.7	14.0	11.7	12.0	9.1	15.1	15.4	13.3	13.8	10.1
	KW	2.07	2.07	2.11	2.09	2.01	2.04	2.02	2.06	2.05	2.01	2.00	1.98	2.02	2.01	2.01
125	T.C.	11.9	12.2	11.9	13.6	15.6	12.9	13.3	12.4	14.3	16.0	13.9	14.3	12.9	15.0	16.4
	S.C.	11.9	11.9	9.6	9.9	7.7	12.9	13.2	11.1	11.6	8.6	13.9	14.3	12.7	13.4	9.5
	KW	2.34	2.36	2.42	2.38	2.28	2.31	2.30	2.35	2.33	2.29	2.28	2.24	2.29	2.28	2.29
NOTE: ALL CAPACITIES INCLUDE INDOOR FAN HEAT. KW VALUES ARE FOR THE SYSTEM (OUTDOOR + INDOOR).																

Multipliers for determining the performance with other indoor sections.

NOTE: For dry bulb temperatures different than those listed (between 73-87 °F), sensible capacity increases by 1060 BTUH per 1000 CFM per degree above the listed temperature and decreases by 1060 BTUH per 1000 CFM per degree below the listed temperature.

Air Handlers	Coils	T.C.	S.C.	KW
–	FC/MC/PC18	0.97	0.97	1.01
–	FC/MC/PC32	1.00	1.00	1.00
–	FC/MC/PC35	1.00	1.00	1.00
–	FC/MC/PC37	1.01	1.01	1.01
–	FC/MC/PC43	1.01	1.01	1.01
–	HD24	1.01	1.00	1.01
–	HD36	0.97	0.93	1.01
–	UC18	0.98	0.98	1.00
AHE18B	–	1.01	1.02	0.91
AHE24B	–	1.02	1.02	0.90
AHE30B	–	1.02	1.02	0.90
AHE36C	–	1.08	1.17	0.91
AHR18B	–	0.99	1.02	0.99

Air Handlers	Coils	T.C.	S.C.	KW
AHV18B	–	0.99	1.00	0.91
AHV24B	–	1.00	1.01	0.91
AHV30B	–	1.01	1.08	0.92
AHV36C	–	1.02	1.07	0.89
AV*24	–	1.02	1.03	0.90
AV*36	–	1.05	1.08	0.90
MV12B	FC/MC18B	1.01	0.99	0.91
MV12B	FC/MC35B	1.02	1.02	0.93
MV12B	FC/MC43B	1.03	1.03	0.92
MX12B	FC/MC18B	1.01	1.00	0.89
MX12B	FC/MC35B	1.04	1.10	0.88
MX12B	FC/MC43B	1.04	1.04	0.89

Continued on next page.

Furnaces	Coils	T.C.	S.C.	KW
T*(8,L)V*A12	FC/MC/PC18A	1.00	0.99	0.92
T*(8,L)V*A12	FC/MC/PC32A	1.02	1.02	0.93
T*(8,L)V*A12	FC/MC/PC37A	1.04	1.08	0.91
T*(8,L)V*A12	HD24	1.04	1.07	0.91
T*(8,L)V*A12	HD36	1.01	1.00	0.92
T*(8,L)V*A12	UC18A	1.01	1.00	0.91
T*(8,L)V*B12	FC/MC/PC18B	1.00	0.99	0.92
T*(8,L)V*B12	FC/MC/PC35B	1.03	1.06	0.92
T*(8,L)V*B12	FC/MC/PC43B	1.02	1.02	0.91
T*(8,L)V*B12	HD24	1.04	1.03	0.89
T*(8,L)V*B12	HD36	1.02	1.01	0.92
T*(8,L)V*B12	UC18B	1.01	1.01	0.91
T*(8,L)V*C16	FC/MC/PC35C	1.03	1.08	0.92
T*(8,L)V*C16	HD24	1.03	1.02	0.90
T*(8,L)V*C16	HD36	1.00	0.96	0.91
T*(8,L)X*A12	FC/MC/PC18A	0.98	0.96	0.89
T*(8,L)X*A12	FC/MC/PC32A	1.03	1.03	0.89
T*(8,L)X*A12	FC/MC/PC37A	1.06	1.09	0.89
T*(8,L)X*A12	HD24	1.04	1.03	0.89
T*(8,L)X*A12	HD36	1.01	0.96	0.89
T*(8,L)X*A12	UC18A	1.01	1.01	0.90
T*(8,L)X*B12	FC/MC/PC18B	1.01	1.00	0.89
T*(8,L)X*B12	FC/MC/PC35B	1.03	1.08	0.89
T*(8,L)X*B12	FC/MC/PC43B	1.07	1.12	0.88
T*(8,L)X*B12	HD24	1.06	1.09	0.89
T*(8,L)X*B12	HD36	1.02	1.02	0.89
T*(8,L)X*B12	UC18B	1.01	1.01	0.90
T*(8,L)X*C16	FC/MC/PC35C	1.03	1.03	0.90
T*(8,L)X*C16	HD24	1.05	1.08	0.90
T*9V*A10	FC/MC/PC18A	0.99	0.98	0.94
T*9V*A10	FC/MC/PC32A	1.01	1.02	0.93
T*9V*A10	FC/MC/PC37A	1.02	1.02	0.93
T*9(C,V)*B12	FC/MC/PC18B	1.01	0.99	0.91
T*9(C,V)*B12	FC/MC/PC35B	1.01	1.01	0.90
T*9(C,V)*B12	HD24	1.03	1.02	0.90

Furnaces	Coils	T.C.	S.C.	KW
T*9(C,V)*B12	HD36	1.01	1.00	0.92
T*9(C,V)*B12	UC18B	1.01	1.01	0.89
T*9(C,V)*C16	FC/MC/PC35C	1.03	1.08	0.90
T*9(C,V)*C16	HD36	1.00	0.96	0.91
T*9X*A10	FC/MC/PC18A	0.99	0.98	0.92
T*9X*A10	FC/MC/PC32A	1.02	1.02	0.92
T*9X*A10	FC/MC/PC37A	1.02	1.02	0.93
T*9X*B12	FC/MC/PC18B	1.01	1.00	0.89
T*9X*B12	FC/MC/PC35B	1.04	1.09	0.89
T*9X*B12	HD24	1.05	1.07	0.88
T*9X*B12	HD36	1.02	1.00	0.89
T*9X*B12	UC18B	1.01	1.01	0.90
C*(8,L)C*A12	FC/MC/PC18A	1.00	0.99	0.92
C*(8,L)C*A12	FC/MC/PC32A	1.02	1.02	0.93
C*(8,L)C*A12	FC/MC/PC37A	1.04	1.08	0.91
C*(8,L)C*A12	HD24	1.04	1.07	0.91
C*(8,L)C*A12	HD36	1.01	1.00	0.92
C*(8,L)C*A12	UC18A	1.01	1.00	0.91
C*(8,L)C*B12	FC/MC/PC18B	1.00	0.99	0.92
C*(8,L)C*B12	FC/MC/PC35B	1.03	1.06	0.92
C*(8,L)C*B12	FC/MC/PC43B	1.02	1.02	0.91
C*(8,L)C*B12	HD24	1.04	1.03	0.89
C*(8,L)C*B12	HD36	1.02	1.01	0.92
C*(8,L)C*B12	UC18B	1.01	1.01	0.91
C*(8,L)C*C16	FC/MC/PC35C	1.03	1.08	0.92
C*(8,L)C*C16	HD24	1.03	1.02	0.90
C*(8,L)C*C16	HD36	1.00	0.96	0.91
C*9C*B12	FC/MC/PC18B	1.01	0.99	0.91
C*9C*B12	FC/MC/PC35B	1.01	1.01	0.90
C*9C*B12	HD24	1.03	1.02	0.90
C*9C*B12	HD36	1.01	1.00	0.92
C*9C*B12	UC18B	1.01	1.01	0.89
C*9C*C16	FC/MC/PC35C	1.03	1.08	0.90
C*9C*C16	HD36	1.00	0.96	0.91

COOLING PERFORMANCE DATA																
AIR CONDITIONER MODEL NO.		TCGF24S41S3(E)														
INDOOR COIL MODEL NO.		FC/MC/PC32														
CONDENSING ENTERING AIR TEMPERATURE	IDCFM	500					700					900				
	ID DB (°F)	80	80	75	80	80	80	80	75	80	80	80	80	75	80	80
	ID WB (°F)	57	62	62	67	72	57	62	62	67	72	57	62	62	67	72
65	T.C.	20.5	23.7	23.8	27.1	29.1	23.5	25.4	25.5	28.6	30.8	26.5	27.1	27.1	30.1	32.6
	S.C.	20.5	18.8	16.0	16.5	13.4	23.5	22.1	18.6	19.0	15.0	26.5	25.4	21.2	21.5	16.5
	KW	1.35	1.31	1.34	1.31	1.33	1.33	1.31	1.33	1.32	1.32	1.31	1.31	1.33	1.33	1.31
75	T.C.	20.0	22.6	22.9	25.6	28.0	22.6	24.2	24.4	27.2	29.7	25.2	25.8	25.9	28.8	31.3
	S.C.	20.0	18.1	15.6	15.8	12.9	22.6	21.3	18.2	18.4	14.5	25.2	24.5	20.8	20.9	16.1
	KW	1.56	1.55	1.55	1.55	1.54	1.55	1.55	1.55	1.54	1.53	1.54	1.55	1.54	1.54	1.52
85	T.C.	19.5	21.5	22.0	24.1	26.9	21.7	23.0	23.4	25.8	28.5	23.9	24.4	24.8	27.5	30.1
	S.C.	19.5	17.3	15.2	15.1	12.4	21.7	20.4	17.8	17.7	14.1	23.9	23.5	20.4	20.3	15.7
	KW	1.78	1.79	1.77	1.78	1.75	1.77	1.78	1.76	1.76	1.74	1.76	1.78	1.75	1.75	1.73
95	T.C.	19.1	20.3	21.1	22.7	25.9	20.8	21.7	22.4	24.4	27.4	22.6	23.1	23.6	26.1	28.9
	S.C.	19.1	16.6	14.8	14.4	12.0	20.8	19.6	17.4	17.1	13.6	22.6	22.6	20.0	19.8	15.2
	KW	1.99	2.02	1.99	2.01	1.96	1.99	2.02	1.98	1.98	1.95	1.98	2.02	1.96	1.96	1.94
105	T.C.	17.9	19.1	19.5	21.4	24.3	19.7	20.5	20.6	22.9	25.7	21.4	21.8	21.7	24.4	27.1
	S.C.	17.9	16.1	14.0	13.9	11.3	19.7	19.0	16.4	16.4	13.0	21.4	21.8	18.9	19.0	14.6
	KW	2.40	2.44	2.41	2.41	2.35	2.38	2.41	2.41	2.37	2.32	2.35	2.38	2.41	2.33	2.29
115	T.C.	16.8	17.8	17.9	20.1	22.8	18.5	19.2	18.9	21.4	24.1	20.3	20.6	19.8	22.8	25.4
	S.C.	16.8	15.6	13.2	13.4	10.8	18.5	18.4	15.5	15.8	12.3	20.3	20.6	17.8	18.2	13.9
	KW	2.81	2.84	2.82	2.79	2.72	2.76	2.79	2.83	2.74	2.68	2.71	2.73	2.83	2.69	2.63
125	T.C.	15.7	16.6	16.3	18.9	21.3	17.4	18.0	17.1	20.0	22.4	19.2	19.4	18.0	21.1	23.6
	S.C.	15.7	15.1	12.4	12.8	10.2	17.4	17.8	14.5	15.1	11.7	19.2	19.4	16.7	17.4	13.2
	KW	3.21	3.25	3.23	3.17	3.10	3.14	3.16	3.25	3.11	3.03	3.07	3.08	3.26	3.05	2.97
NOTE: ALL CAPACITIES INCLUDE INDOOR FAN HEAT. KW VALUES ARE FOR THE SYSTEM (OUTDOOR + INDOOR).																

Multipliers for determining the performance with other indoor sections.

NOTE: For dry bulb temperatures different than those listed (between 73-87 °F), sensible capacity increases by 1060 BTUH per 1000 CFM per degree above the listed temperature and decreases by 1060 BTUH per 1000 CFM per degree below the listed temperature.

Air Handlers	Coils	T.C.	S.C.	KW
–	FC/MC/PC32	1.00	1.00	1.00
–	FC/MC/PC35	1.02	1.02	1.02
–	FC/MC/PC37	1.04	1.04	1.04
–	FC/MC/PC43	1.03	1.05	1.02
–	FC/MC/PC48	1.05	1.06	1.02
–	HD36	1.02	0.99	1.04
–	HD48	1.05	1.04	1.04
AHE24B	–	1.03	1.09	0.94
AHE30B	–	1.03	1.09	0.94
AHE36C	–	1.07	1.15	0.93
AHE42D	–	1.08	1.13	0.92
AHR24B	–	1.02	1.03	0.98
AHV24B	–	0.98	0.99	0.91

Air Handlers	Coils	T.C.	S.C.	KW
AHV30B	–	0.99	1.02	0.92
AHV36C	–	1.00	1.03	0.91
AV*36	–	1.06	1.08	0.95
MV12B	FC/MC35B	1.05	1.05	0.96
MV12B	FC/MC43B	1.06	1.07	0.95
MV12D	FC/MC48D	1.08	1.15	0.92
MV16C	FC/MC35C	1.05	1.05	0.96
MV16C	FC/MC43C	1.06	1.07	0.95
MV16C	FC/MC48C	1.07	1.09	0.94
MX12B	FC/MC35B	1.05	1.09	0.91
MX12B	FC/MC43B	1.05	1.07	0.92

Continued on next page.

Furnaces	Coils	T.C.	S.C.	KW
T*(8,L)V*A12	FC/MC/PC32A	0.98	0.98	0.91
T*(8,L)V*A12	FC/MC/PC37A	0.98	0.98	0.90
T*(8,L)V*A12	HD36	0.98	0.95	0.90
T*(8,L)V*B12	FC/MC/PC35B	0.98	0.98	0.91
T*(8,L)V*B12	FC/MC/PC43B	0.98	0.97	0.90
T*(8,L)V*B12	HD36	0.98	0.94	0.91
T*(8,L)V*C16	HD36	0.98	0.97	0.90
T*(8,L)V*C20	HD36	0.98	0.94	0.91
T*(8,L)X*A12	FC/MC/PC32A	1.06	1.11	0.98
T*(8,L)X*A12	FC/MC/PC37A	1.08	1.16	0.99
T*(8,L)X*A12	HD36	0.85	1.01	0.81
T*(8,L)X*B12	FC/MC/PC35B	1.07	1.12	0.99
T*(8,L)X*B12	FC/MC/PC43B	1.09	1.17	0.99
T*(8,L)X*B12	HD36	1.06	1.11	0.98
T*(8,L)X*C16	FC/MC/PC35C	1.01	1.00	0.94
T*(8,L)X*C16	FC/MC/PC43C	1.03	1.04	0.94
T*(8,L)X*C16	FC/MC/PC48C	1.05	1.07	0.97
T*(8,L)X*C20	FC/MC/PC35C	1.07	1.16	0.98
T*9V*A10	FC/MC/PC32A	1.02	1.06	0.99
T*9V*A10	FC/MC/PC37A	1.04	1.08	0.98
T*9(C,V)*B12	FC/MC/PC35B	0.98	0.99	0.91
T*9(C,V)*B12	FC/MC/PC43B	0.98	0.98	0.90
T*9(C,V)*B12	HD36	0.98	0.95	0.91
T*9(C,V)*C16	FC/MC/PC35C	1.03	1.02	0.98
T*9(C,V)*C16	HD36	0.98	0.95	0.90
T*9(C,V)*C20	HD36	0.98	0.94	0.91

Furnaces	Coils	T.C.	S.C.	KW
T*9X*A10	FC/MC/PC32A	1.02	1.04	0.97
T*9X*A10	FC/MC/PC37A	1.03	1.06	0.96
T*9X*B12	FC/MC/PC35B	1.06	1.12	0.98
T*9X*B12	FC/MC/PC43B	1.07	1.13	0.98
T*9X*B12	HD36	1.04	1.06	0.98
T*9X*C16	FC/MC/PC35C	1.03	1.06	0.96
T*9X*C16	FC/MC/PC43C	1.06	1.09	0.96
T*9X*C16	FC/MC/PC48C	1.07	1.13	1.00
T*9X*C20	FC/MC/PC35C	1.06	1.12	0.96
T*9X*C20	FC/MC/PC43C	1.07	1.13	1.00
T*9X*C20	FC/MC/PC48C	1.10	1.17	1.02
C*(8,L)C*A12	FC/MC/PC32A	0.98	0.98	0.91
C*(8,L)C*A12	FC/MC/PC37A	0.98	0.98	0.90
C*(8,L)C*A12	HD36	0.98	0.95	0.90
C*(8,L)C*B12	FC/MC/PC35B	0.98	0.98	0.91
C*(8,L)C*B12	FC/MC/PC43B	0.98	0.97	0.90
C*(8,L)C*B12	HD36	0.98	0.94	0.91
C*(8,L)C*C16	HD36	0.98	0.97	0.90
C*(8,L)C*C20	HD36	0.98	0.94	0.91
C*9C*B12	FC/MC/PC35B	0.98	0.99	0.91
C*9C*B12	FC/MC/PC43B	0.98	0.98	0.90
C*9C*B12	HD36	0.98	0.95	0.91
C*9C*C16	FC/MC/PC35C	1.03	1.02	0.98
C*9C*C16	HD36	0.98	0.95	0.90
C*9C*C20	HD36	0.98	0.94	0.91

COOLING PERFORMANCE DATA																
AIR CONDITIONER MODEL NO.		**TCGF30S41S3(E)**														
INDOOR COIL MODEL NO.		**FC/MC/PC43**														
CONDENSING ENTERING AIR TEMPERATURE	IDCFM	800					1000					1200				
	ID DB (°F)	80	80	75	80	80	80	80	75	80	80	80	80	75	80	80
	ID WB (°F)	57	62	62	67	72	57	62	62	67	72	57	62	62	67	72
65	T.C.	28.8	29.9	30.0	33.1	36.6	31.0	31.1	31.2	34.3	37.7	33.3	32.4	32.4	35.4	38.7
	S.C.	28.0	25.5	21.3	21.3	17.0	29.9	28.4	23.6	23.7	18.4	31.7	31.3	25.9	26.1	19.8
	KW	1.64	1.64	1.64	1.64	1.64	1.64	1.64	1.64	1.64	1.65	1.64	1.64	1.64	1.65	1.65
75	T.C.	27.3	28.5	28.7	31.6	35.1	29.4	29.7	29.7	32.7	36.1	31.4	30.9	30.8	33.8	37.1
	S.C.	26.9	24.4	20.5	20.6	16.5	28.8	27.3	22.7	22.9	17.8	30.6	30.1	25.0	25.2	19.2
	KW	1.90	1.90	1.90	1.89	1.90	1.90	1.90	1.90	1.90	1.90	1.90	1.90	1.90	1.90	1.90
85	T.C.	25.8	27.1	27.3	30.1	33.5	27.7	28.3	28.3	31.2	34.5	29.6	29.4	29.2	32.2	35.5
	S.C.	25.8	23.4	19.8	19.8	15.9	27.6	26.2	21.9	22.1	17.3	29.5	29.0	24.0	24.4	18.6
	KW	2.16	2.16	2.15	2.15	2.15	2.15	2.16	2.15	2.15	2.15	2.15	2.16	2.15	2.15	2.15
95	T.C.	24.3	25.8	25.9	28.6	31.9	26.0	26.9	26.8	29.6	32.9	27.8	28.0	27.7	30.6	33.9
	S.C.	24.3	22.4	19.0	19.1	15.3	26.0	25.1	21.1	21.3	16.7	27.8	27.8	23.1	23.6	18.1
	KW	2.41	2.42	2.41	2.41	2.40	2.41	2.41	2.41	2.41	2.40	2.40	2.41	2.41	2.40	2.40
105	T.C.	23.1	24.4	24.4	27.0	30.1	24.7	25.6	25.2	27.9	31.0	26.2	26.7	26.0	28.8	31.9
	S.C.	23.1	21.8	18.4	18.5	14.7	24.7	24.3	20.3	20.6	16.0	26.2	26.7	22.3	22.7	17.4
	KW	2.81	2.81	2.81	2.80	2.78	2.79	2.80	2.81	2.79	2.78	2.78	2.78	2.81	2.78	2.77
115	T.C.	22.0	23.1	23.0	25.5	28.4	23.4	24.3	23.7	26.3	29.2	24.8	25.5	24.4	27.1	30.0
	S.C.	22.0	21.2	17.8	17.9	14.1	23.4	23.6	19.6	19.9	15.4	24.8	25.5	21.5	21.9	16.7
	KW	3.19	3.20	3.20	3.18	3.14	3.17	3.17	3.20	3.17	3.14	3.15	3.13	3.20	3.15	3.14
125	T.C.	20.8	21.8	21.5	24.0	26.7	22.1	23.0	22.1	24.6	27.4	23.3	24.3	22.7	25.3	28.1
	S.C.	20.8	20.6	17.2	17.3	13.4	22.1	22.9	18.9	19.2	14.8	23.3	24.3	20.7	21.1	16.1
	KW	3.57	3.59	3.58	3.56	3.51	3.54	3.54	3.59	3.54	3.50	3.51	3.49	3.59	3.52	3.50
NOTE: ALL CAPACITIES INCLUDE INDOOR FAN HEAT. KW VALUES ARE FOR THE SYSTEM (OUTDOOR + INDOOR).																

Multipliers for determining the performance with other indoor sections.

NOTE: For dry bulb temperatures different than those listed (between 73-87 °F), sensible capacity increases by 1060 BTUH per 1000 CFM per degree above the listed temperature and decreases by 1060 BTUH per 1000 CFM per degree below the listed temperature.

Air Handlers	Coils	T.C.	S.C.	KW
–	FC/MC/PC32	0.98	0.96	1.00
–	FC/MC/PC35	0.98	0.96	1.00
–	FC/MC/PC37	1.00	0.99	1.00
–	FC/MC/PC43	1.00	1.00	1.00
–	FC/MC/PC48	1.01	1.00	1.01
–	HD36	0.97	0.93	1.00
–	HD48	1.01	0.98	1.00
AHE30B	–	1.00	0.97	0.95
AHE36C	–	1.03	1.00	0.92
AHE42D	–	1.04	1.02	0.91
AHR30B	–	1.01	1.00	1.03
AHR36B	–	1.01	1.00	1.02
AHV30B	–	0.98	0.95	0.96
AHV36C	–	0.99	0.94	0.92

Air Handlers	Coils	T.C.	S.C.	KW
AHV42D	–	1.01	1.02	0.92
AV*36	–	1.03	1.04	0.94
MV12B	FC/MC35B	1.00	0.98	0.95
MV12B	FC/MC43B	1.02	1.01	0.95
MV16C	FC/MC35C	1.00	0.98	0.93
MV16C	FC/MC43C	1.02	1.01	0.93
MV16C	FC/MC48C	1.03	1.02	0.94
MV20D	FC/MC48D	1.03	1.02	0.94
MX12B	FC/MC35B	1.03	1.01	0.95
MX12B	FC/MC43B	1.04	1.04	0.95
MX16C	FC/MC35C	1.02	1.00	0.91
MX16C	FC/MC43C	1.03	1.01	0.90
MX16C	FC/MC48C	1.04	1.02	0.90

Continued on next page.

Furnaces	Coils	T.C.	S.C.	KW
T*(8,L)V*A12	FC/MC/PC32A	0.99	0.99	0.99
T*(8,L)V*A12	FC/MC/PC37A	1.01	0.99	0.97
T*(8,L)V*A12	HD36	0.98	0.94	0.95
T*(8,L)V*B12	FC/MC/PC35B	0.99	1.01	0.94
T*(8,L)V*B12	FC/MC/PC43B	1.01	1.04	0.94
T*(8,L)V*B12	HD36	0.99	0.94	0.93
T*(8,L)V*C16	FC/MC/PC35C	0.99	1.00	0.92
T*(8,L)V*C16	FC/MC/PC43C	1.01	1.01	0.92
T*(8,L)V*C16	FC/MC/PC48C	1.01	1.02	0.91
T*(8,L)V*C16	HD36	0.99	0.95	0.93
T*(8,L)V*C20	FC/MC/PC35C	1.00	1.01	0.93
T*(8,L)V*C20	FC/MC/PC43C	1.01	1.01	0.91
T*(8,L)V*C20	FC/MC/PC48C	1.01	1.02	0.91
T*(8,L)V*C20	HD36	1.00	0.98	0.93
T*(8,L)X*A12	FC/MC/PC32A	0.99	0.98	0.93
T*(8,L)X*A12	FC/MC/PC37A	1.03	1.07	0.98
T*(8,L)X*A12	HD36	1.01	1.05	0.97
T*(8,L)X*B12	FC/MC/PC35B	1.01	1.05	0.94
T*(8,L)X*B12	FC/MC/PC43B	1.04	1.08	0.95
T*(8,L)X*B12	HD36	1.01	1.06	0.96
T*(8,L)X*C16	FC/MC/PC35C	1.01	1.06	0.94
T*(8,L)X*C16	FC/MC/PC43C	0.96	0.90	0.87
T*(8,L)X*C16	FC/MC/PC48C	0.98	0.93	0.91
T*(8,L)X*C16	HD36	1.01	1.04	0.96
T*(8,L)X*C20	FC/MC/PC35C	0.98	0.95	0.91
T*(8,L)X*C20	FC/MC/PC43C	1.01	0.98	0.92
T*(8,L)X*C20	FC/MC/PC48C	1.01	1.01	0.94
T*9(C,V)*B12	FC/MC/PC35B	0.99	1.00	0.98
T*9(C,V)*B12	FC/MC/PC43B	1.01	1.00	0.97
T*9(C,V)*B12	HD36	0.99	0.94	0.95
T*9(C,V)*C16	FC/MC/PC35C	1.00	1.01	0.93
T*9(C,V)*C16	FC/MC/PC43C	1.01	1.01	0.94
T*9(C,V)*C16	FC/MC/PC48C	1.01	1.02	0.92
T*9(C,V)*C16	HD36	0.99	0.95	0.92
T*9(C,V)*C20	FC/MC/PC35C	1.00	1.01	0.93
T*9(C,V)*C20	FC/MC/PC43C	1.01	1.01	0.92
T*9(C,V)*C20	FC/MC/PC48C	1.01	1.02	0.92
T*9(C,V)*C20	HD36	0.99	0.94	0.93

Furnaces	Coils	T.C.	S.C.	KW
T*9(C,V)*D20	FC/MC/PC48D	1.01	1.04	0.92
T*9X*A10	FC/MC/PC32A	0.99	0.97	1.02
T*9X*A10	FC/MC/PC37A	1.00	0.99	1.03
T*9X*B12	FC/MC/PC35B	1.01	1.04	0.96
T*9X*B12	FC/MC/PC43B	1.03	1.07	0.96
T*9X*C16	FC/MC/PC35C	1.01	1.04	0.96
T*9X*C16	FC/MC/PC43C	1.03	1.06	0.96
T*9X*C16	FC/MC/PC48C	1.04	1.07	0.97
T*9X*C20	FC/MC/PC35C	0.93	0.87	0.93
T*9X*C20	FC/MC/PC43C	0.96	0.90	0.89
T*9X*C20	FC/MC/PC48C	0.98	0.93	0.91
T*9X*D20	FC/MC/PC48D	0.99	0.94	0.92
C*(8,L)C*A12	FC/MC/PC32A	0.99	0.99	0.99
C*(8,L)C*A12	FC/MC/PC37A	1.01	0.99	0.97
C*(8,L)C*A12	HD36	0.98	0.94	0.95
C*(8,L)C*B12	FC/MC/PC35B	0.99	1.01	0.94
C*(8,L)C*B12	FC/MC/PC43B	1.01	1.04	0.94
C*(8,L)C*B12	HD36	0.99	0.94	0.93
C*(8,L)C*C16	FC/MC/PC35C	0.99	1.00	0.92
C*(8,L)C*C16	FC/MC/PC43C	1.01	1.01	0.92
C*(8,L)C*C16	FC/MC/PC48C	1.01	1.02	0.91
C*(8,L)C*C16	HD36	0.99	0.95	0.93
C*(8,L)C*C20	FC/MC/PC35C	1.00	1.01	0.93
C*(8,L)C*C20	FC/MC/PC43C	1.01	1.01	0.91
C*(8,L)C*C20	FC/MC/PC48C	1.01	1.02	0.91
C*(8,L)C*C20	HD36	1.00	0.98	0.93
C*9C*B12	FC/MC/PC35B	0.99	1.00	0.98
C*9C*B12	FC/MC/PC43B	1.01	1.00	0.97
C*9C*B12	HD36	0.99	0.94	0.95
C*9C*C16	FC/MC/PC35C	1.00	1.01	0.93
C*9C*C16	FC/MC/PC43C	1.01	1.01	0.94
C*9C*C16	FC/MC/PC48C	1.01	1.02	0.92
C*9C*C16	HD36	0.99	0.95	0.92
C*9C*C20	FC/MC/PC35C	1.00	1.01	0.93
C*9C*C20	FC/MC/PC43C	1.01	1.01	0.92
C*9C*C20	FC/MC/PC48C	1.01	1.02	0.92
C*9C*C20	HD36	0.99	0.94	0.93
C*9C*D20	FC/MC/PC48D	1.01	1.04	0.92

COOLING PERFORMANCE DATA																
AIR CONDITIONER MODEL NO.		**TCGF36S41S3(E)**														
INDOOR COIL MODEL NO.		**FC/MC/PC43**														
CONDENSING ENTERING AIR TEMPERATURE	IDCFM	1000					1200					1400				
	ID DB (°F)	80	80	75	80	80	80	80	75	80	80	80	80	75	80	80
	ID WB (°F)	57	62	62	67	72	57	62	62	67	72	57	62	62	67	72
65	T.C.	33.2	35.1	35.4	38.6	42.2	35.0	35.9	36.1	39.5	43.1	36.8	36.7	36.8	40.4	44.0
	S.C.	32.9	30.3	25.8	25.5	20.0	34.8	33.3	28.1	27.8	21.3	36.7	36.4	30.5	30.1	22.7
	KW	1.88	1.88	1.88	1.90	1.92	1.89	1.89	1.89	1.90	1.93	1.90	1.90	1.90	1.91	1.93
75	T.C.	32.0	33.4	33.6	36.9	40.5	33.7	34.4	34.4	37.7	41.3	35.5	35.3	35.2	38.5	42.0
	S.C.	31.6	29.4	25.0	24.7	19.3	33.4	32.3	27.4	27.1	20.8	35.3	35.3	29.7	29.4	22.2
	KW	2.18	2.19	2.18	2.19	2.21	2.19	2.19	2.19	2.20	2.21	2.19	2.19	2.19	2.20	2.22
85	T.C.	30.8	31.7	31.8	35.2	38.8	32.5	32.8	32.6	36.0	39.4	34.2	33.9	33.5	36.7	40.1
	S.C.	30.3	28.5	24.2	24.0	18.7	32.1	31.3	26.6	26.4	20.2	33.9	33.9	28.9	28.8	21.8
	KW	2.48	2.49	2.48	2.49	2.49	2.48	2.49	2.49	2.49	2.50	2.48	2.48	2.49	2.49	2.50
95	T.C.	29.6	30.1	30.0	33.5	37.1	31.2	31.3	30.9	34.2	37.6	32.9	32.6	31.8	34.9	38.1
	S.C.	29.0	27.7	23.4	23.2	18.1	30.8	30.3	25.8	25.7	19.7	32.5	32.6	28.2	28.1	21.3
	KW	2.79	2.80	2.79	2.78	2.78	2.78	2.79	2.78	2.78	2.78	2.78	2.78	2.78	2.78	2.79
105	T.C.	27.5	27.8	27.5	30.9	34.5	29.2	29.1	28.3	31.5	34.9	30.9	30.4	29.1	32.2	35.4
	S.C.	27.1	26.2	22.1	22.2	17.2	28.8	28.5	24.4	24.5	18.8	30.4	30.4	26.6	26.8	20.3
	KW	3.38	3.39	3.40	3.36	3.31	3.36	3.35	3.39	3.34	3.30	3.33	3.32	3.38	3.33	3.30
115	T.C.	25.5	25.6	25.1	28.3	32.0	27.2	26.9	25.7	28.9	32.4	28.9	28.2	26.4	29.5	32.8
	S.C.	25.2	24.8	20.8	21.2	16.4	26.8	26.7	23.0	23.3	17.9	28.4	28.2	25.1	25.5	19.4
	KW	3.96	3.96	4.00	3.91	3.83	3.92	3.91	3.98	3.89	3.81	3.87	3.85	3.95	3.87	3.79
125	T.C.	23.6	23.4	22.6	25.8	29.5	25.3	24.7	23.2	26.3	29.8	27.0	26.0	23.7	26.8	30.1
	S.C.	23.3	23.4	19.6	20.2	15.6	24.8	24.7	21.6	22.2	17.1	26.3	26.0	23.7	24.2	18.5
	KW	4.54	4.53	4.60	4.47	4.34	4.47	4.46	4.56	4.44	4.32	4.40	4.38	4.53	4.40	4.29

NOTE: ALL CAPACITIES INCLUDE INDOOR FAN HEAT. KW VALUES ARE FOR THE SYSTEM (OUTDOOR + INDOOR).

Multipliers for determining the performance with other indoor sections.

NOTE: For dry bulb temperatures different than those listed (between 73-87 °F), sensible capacity increases by 1060 BTUH per 1000 CFM per degree above the listed temperature and decreases by 1060 BTUH per 1000 CFM per degree below the listed temperature.

Air Handlers	Coils	T.C.	S.C.	KW
–	FC/MC/PC37	1.01	1.01	1.01
–	FC/MC/PC43	1.00	1.00	1.00
–	FC/MC/PC48	1.01	1.02	1.02
–	FC/MC/PC60	0.99	1.02	1.02
–	FC/MC62	1.01	1.03	1.01
–	FC64	1.04	1.07	1.02
–	HD48	1.01	1.00	1.02
–	UC60	0.97	0.95	1.02
AHE36C	–	1.02	1.04	0.93
AHE42D	–	1.03	1.06	0.92
AHE48D	–	1.02	1.05	0.92
AHE60D	–	1.04	1.06	0.91
AHR36B	–	1.00	1.01	1.03
AHR42C	–	1.02	1.05	1.00
AHV36C	–	1.01	1.03	0.97
AHV42D	–	1.02	1.04	0.94
AHV48D	–	1.00	1.02	0.93
AV*36	–	1.03	1.03	0.96
AV*48	–	0.98	0.99	0.93
MV12B	FC/MC43B	1.02	1.02	0.96
MV12D	FC/MC48D	1.03	1.03	0.96

Air Handlers	Coils	T.C.	S.C.	KW
MV12D	FC/MC60D	1.01	1.02	0.94
MV12D	FC/MC62D	1.04	1.06	0.91
MV12D	FC64D	1.05	1.08	0.96
MV16C	FC/MC43C	1.02	1.03	0.95
MV16C	FC/MC48C	1.04	1.06	0.96
MV20D	FC/MC48D	1.05	1.10	0.92
MV20D	FC/MC60D	1.03	1.09	0.94
MV20D	FC/MC62D	1.04	1.10	0.93
MV20D	FC64D	1.05	1.08	0.96
MX12B	FC/MC43B	1.02	1.05	0.97
MX12D	FC/MC48D	1.04	1.07	0.94
MX12D	FC/MC60D	1.03	1.07	0.94
MX12D	FC/MC62D	1.05	1.10	0.92
MX12D	FC64D	1.08	1.14	0.91
MX16C	FC/MC43C	1.02	1.03	0.91
MX16C	FC/MC48C	1.03	1.06	0.90
MX20D	FC/MC60D	1.04	1.10	0.91
MX20D	FC/MC62D	1.04	1.10	0.91
MX20D	FC64D	1.08	1.14	0.91

Continued on next page.

Furnaces	Coils	T.C.	S.C.	KW
T*(8,L)V*A12	FC/MC/PC37A	1.00	0.99	0.99
T*(8,L)V*B12	FC/MC/PC43B	1.02	1.04	1.00
T*(8,L)V*B12	HD48	1.02	1.02	1.00
T*(8,L)V*C16	FC/MC/PC43C	1.02	1.03	0.97
T*(8,L)V*C16	FC/MC/PC48C	1.04	1.05	0.97
T*(8,L)V*C16	FC/PC60C	1.02	1.03	0.94
T*(8,L)V*C16	HD48	1.03	1.03	0.96
T*(8,L)V*C16	UC60C	1.00	0.98	0.94
T*(8,L)V*C20	FC/MC/PC43C	1.01	1.03	0.95
T*(8,L)V*C20	FC/MC/PC48C	1.04	1.06	0.95
T*(8,L)V*C20	FC/PC60C	1.04	1.04	0.94
T*(8,L)V*C20	HD48	1.03	1.04	0.96
T*(8,L)V*C20	UC60C	1.00	0.98	0.94
T*(8,L)X*A12	FC/MC/PC37A	1.04	1.06	1.00
T*(8,L)X*B12	FC/MC/PC43B	1.03	1.06	0.97
T*(8,L)X*C16	FC/MC/PC43C	1.03	1.03	0.97
T*(8,L)X*C16	FC/MC/PC48C	1.05	1.06	0.97
T*(8,L)X*C16	HD48	1.01	1.02	0.96
T*(8,L)X*C16	UC60C	0.99	0.98	0.96
T*(8,L)X*C20	FC/MC/PC43C	1.04	1.06	0.98
T*(8,L)X*C20	FC/MC/PC48C	1.04	1.05	0.97
T*(8,L)X*C20	HD48	1.03	1.05	0.97
T*(8,L)X*C20	UC60D	1.01	1.03	0.98
T*9(C,V)*B12	FC/MC/PC43B	1.01	1.02	1.02
T*9(C,V)*B12	HD48	1.02	1.02	1.00
T*9(C,V)*C16	FC/MC/PC43C	1.02	1.02	0.98
T*9(C,V)*C16	FC/MC/PC48C	1.04	1.05	0.98
T*9(C,V)*C16	FC/PC60C	1.02	1.03	0.97
T*9(C,V)*C16	HD48	1.02	1.03	0.97
T*9(C,V)*C16	UC60C	0.99	0.98	0.97
T*9(C,V)*C20	FC/MC/PC43C	1.02	1.02	0.97
T*9(C,V)*C20	FC/MC/PC48C	1.05	1.09	1.01
T*9(C,V)*C20	FC/PC60C	1.04	1.09	0.97
T*9(C,V)*C20	HD48	1.04	1.06	1.00
T*9(C,V)*C20	UC60C	1.01	1.02	0.97
T*9(C,V)*D20	FC/MC/PC60D	1.03	1.04	0.95
T*9(C,V)*D20	FC/MC62D	1.04	1.06	0.95
T*9(C,V)*D20	FC64D	1.05	1.08	1.00
T*9(C,V)*D20	UC60D	0.99	0.98	0.95
T*9X*B12	FC/MC/PC43B	1.03	1.06	0.99
T*9X*C16	FC/MC/PC43C	1.03	1.06	0.97

Furnaces	Coils	T.C.	S.C.	KW
T*9X*C16	FC/MC/PC48C	1.04	1.07	0.98
T*9X*C16	FC/PC60C	1.00	1.02	0.96
T*9X*C16	HD48	0.98	1.06	0.95
T*9X*C20	FC/MC/PC43C	1.02	1.03	0.97
T*9X*C20	FC/MC/PC48C	1.04	1.05	0.98
T*9X*C20	FC/PC60C	0.99	0.98	0.95
T*9X*C20	HD48	1.03	1.05	0.99
T*9X*D20	FC/MC/PC48D	1.04	1.05	0.98
T*9X*D20	FC64D	1.05	1.08	1.00
T*9X*D20	HD48	1.03	1.05	0.99
T*9X*D20	UC60D	1.01	1.02	0.97
C*(8,L)C*A12	FC/MC/PC37A	1.00	0.99	0.99
C*(8,L)C*B12	FC/MC/PC43B	1.02	1.04	1.00
C*(8,L)C*B12	HD48	1.02	1.02	1.00
C*(8,L)C*C16	FC/MC/PC43C	1.02	1.03	0.97
C*(8,L)C*C16	FC/MC/PC48C	1.04	1.05	0.97
C*(8,L)C*C16	FC/PC60C	1.02	1.03	0.94
C*(8,L)C*C16	HD48	1.03	1.03	0.96
C*(8,L)C*C16	UC60C	1.00	0.98	0.94
C*(8,L)C*C20	FC/MC/PC43C	1.01	1.03	0.95
C*(8,L)C*C20	FC/MC/PC48C	1.04	1.06	0.95
C*(8,L)C*C20	FC/PC60C	1.04	1.04	0.94
C*(8,L)C*C20	HD48	1.03	1.04	0.96
C*(8,L)C*C20	UC60C	1.00	0.98	0.94
C*9C*B12	FC/MC/PC43B	1.01	1.02	1.02
C*9C*B12	HD48	1.02	1.02	1.00
C*9C*C16	FC/MC/PC43C	1.02	1.02	0.98
C*9C*C16	FC/MC/PC48C	1.04	1.05	0.98
C*9C*C16	FC/PC60C	1.02	1.03	0.97
C*9C*C16	HD48	1.02	1.03	0.97
C*9C*C16	UC60C	0.99	0.98	0.97
C*9C*C20	FC/MC/PC43C	1.02	1.02	0.97
C*9C*C20	FC/MC/PC48C	1.05	1.09	1.01
C*9C*C20	FC/PC60C	1.04	1.09	0.97
C*9C*C20	HD48	1.04	1.06	1.00
C*9C*C20	UC60C	1.01	1.02	0.97
C*9C*D20	FC/MC/PC60D	1.03	1.04	0.95
C*9C*D20	FC/MC62D	1.04	1.06	0.95
C*9C*D20	FC64D	1.05	1.08	1.00
C*9C*D20	UC60D	0.99	0.98	0.95

COOLING PERFORMANCE DATA																
AIR CONDITIONER MODEL NO.		**TCGF42S41S3(E)**														
INDOOR COIL MODEL NO.		**FC/MC/PC48**														
CONDENSING ENTERING AIR TEMPERATURE	IDCFM	1200					1400					1600				
	ID DB (°F)	80	80	75	80	80	80	80	75	80	80	80	80	75	80	80
	ID WB (°F)	57	62	62	67	72	57	62	62	67	72	57	62	62	67	72
65	T.C.	39.9	41.8	41.4	45.0	47.9	41.6	42.7	42.4	45.9	48.8	43.4	43.7	43.3	46.8	49.7
	S.C.	39.8	36.6	30.9	30.3	23.8	41.4	39.2	32.9	32.4	24.9	43.1	41.9	35.0	34.6	26.0
	KW	2.30	2.31	2.31	2.32	2.33	2.31	2.31	2.32	2.33	2.34	2.32	2.31	2.32	2.34	2.34
75	T.C.	38.4	40.0	39.7	43.2	46.2	40.1	41.0	40.7	44.1	47.1	41.8	42.0	41.7	45.0	48.0
	S.C.	38.3	35.5	30.0	29.5	23.1	39.9	38.2	32.1	31.8	24.4	41.6	40.8	34.3	34.0	25.6
	KW	2.67	2.68	2.67	2.67	2.68	2.67	2.67	2.67	2.68	2.68	2.67	2.67	2.68	2.68	2.68
85	T.C.	37.0	38.3	38.0	41.4	44.6	38.6	39.3	39.0	42.3	45.4	40.3	40.3	40.0	43.1	46.2
	S.C.	36.7	34.5	29.1	28.8	22.5	38.4	37.1	31.3	31.1	23.8	40.1	39.7	33.6	33.3	25.1
	KW	3.04	3.04	3.03	3.02	3.02	3.03	3.04	3.03	3.03	3.02	3.03	3.03	3.03	3.03	3.03
95	T.C.	35.5	36.6	36.3	39.7	42.9	37.1	37.6	37.4	40.5	43.7	38.7	38.7	38.4	41.3	44.5
	S.C.	35.2	33.4	28.2	28.0	21.9	36.9	36.0	30.6	30.4	23.3	38.6	38.6	32.9	32.7	24.7
	KW	3.41	3.41	3.39	3.37	3.36	3.39	3.40	3.39	3.38	3.37	3.38	3.39	3.38	3.38	3.37
105	T.C.	33.7	34.4	34.0	37.4	40.5	35.1	35.5	34.9	38.1	41.2	36.6	36.6	35.9	38.9	41.9
	S.C.	33.3	32.3	27.3	27.1	21.1	34.9	34.6	29.5	29.4	22.4	36.5	36.6	31.7	31.7	23.8
	KW	4.03	4.01	4.01	3.94	3.90	3.98	3.98	3.99	3.93	3.90	3.94	3.94	3.98	3.92	3.89
115	T.C.	31.8	32.3	31.7	35.1	38.2	33.2	33.4	32.6	35.8	38.8	34.6	34.6	33.5	36.5	39.4
	S.C.	31.6	31.2	26.3	26.3	20.3	33.1	33.2	28.4	28.5	21.6	34.5	34.6	30.5	30.8	22.9
	KW	4.63	4.60	4.61	4.48	4.42	4.56	4.54	4.58	4.46	4.41	4.48	4.48	4.56	4.45	4.40
125	T.C.	30.0	30.1	29.5	32.9	35.8	31.3	31.4	30.2	33.5	36.4	32.6	32.6	31.0	34.1	36.9
	S.C.	29.8	30.1	25.4	25.4	19.5	31.2	31.4	27.4	27.6	20.8	32.5	32.6	29.4	29.8	22.1
	KW	5.23	5.18	5.22	5.02	4.93	5.13	5.10	5.17	5.00	4.92	5.03	5.02	5.13	4.98	4.92
NOTE: ALL CAPACITIES INCLUDE INDOOR FAN HEAT. KW VALUES ARE FOR THE SYSTEM (OUTDOOR + INDOOR).																

Multipliers for determining the performance with other indoor sections.

NOTE: For dry bulb temperatures different than those listed (between 73-87 °F), sensible capacity increases by 1060 BTUH per 1000 CFM per degree above the listed temperature and decreases by 1060 BTUH per 1000 CFM per degree below the listed temperature.

Air Handlers	Coils	T.C.	S.C.	KW
–	FC/MC/PC43	1.00	1.00	1.00
–	FC/MC/PC48	1.00	1.00	1.00
–	FC/MC/PC60	1.01	1.01	0.99
–	FC/MC62	1.01	1.02	0.99
–	FC64	1.02	1.05	1.00
–	HD48	1.01	1.00	1.00
–	HD60	1.02	1.03	1.00
AHE42D	–	1.02	1.02	0.93
AHE48D	–	1.00	1.01	0.92
AHE60D	–	1.02	1.03	0.93
AHR42C	–	1.01	1.03	1.01
AHR48D	–	0.98	0.96	1.00
AHR60D	–	1.00	0.99	0.98
AHV42D	–	0.99	0.99	0.95
AHV48D	–	1.00	0.98	0.94
AHV60D	–	1.01	1.01	0.95
AV*48	–	0.99	0.98	0.95

Air Handlers	Coils	T.C.	S.C.	KW
AV*60	–	0.99	0.98	0.95
MV12D	FC64D	1.04	1.00	0.96
MV16C	FC/MC43C	1.01	1.01	0.95
MV16C	FC/MC48C	1.02	1.03	0.95
MV16C	FC60C	1.00	1.01	0.94
MV20D	FC/MC48D	1.04	1.03	0.96
MV20D	FC/MC60D	1.02	1.03	0.95
MV20D	FC/MC62D	1.04	1.03	0.96
MV20D	FC64D	1.04	1.03	0.92
MX16C	FC/MC43C	1.01	1.01	0.92
MX16C	FC/MC48C	1.02	1.03	0.93
MX16C	FC60C	1.00	1.01	0.92
MX20D	FC/MC48D	1.02	1.03	0.93
MX20D	FC/MC60D	1.01	1.04	0.92
MX20D	FC/MC62D	1.02	1.06	0.91
MX20D	FC64D	1.06	1.10	0.93

Continued on next page.

Furnaces	Coils	T.C.	S.C.	KW
T*(8,L)V*B12	HD48	1.01	0.98	0.97
T*(8,L)V*C16	FC/MC/PC43C	1.02	1.01	0.98
T*(8,L)V*C16	FC/MC/PC48C	1.01	1.01	0.94
T*(8,L)V*C16	FC/PC60C	1.04	1.04	0.95
T*(8,L)V*C16	FC64D	1.04	1.05	0.96
T*(8,L)V*C16	HD48	1.02	1.01	0.95
T*(8,L)V*C16	HD60	1.04	1.03	0.94
T*(8,L)V*C16	UC48C	1.00	1.01	0.95
T*(8,L)V*C16	UC60C	1.00	0.98	0.94
T*(8,L)V*C20	FC/MC/PC43C	1.02	1.01	0.98
T*(8,L)V*C20	FC/MC/PC48C	1.02	1.03	0.94
T*(8,L)V*C20	FC/PC60C	1.04	1.02	0.93
T*(8,L)V*C20	FC64D	1.04	1.05	0.96
T*(8,L)V*C20	HD48	1.04	1.02	0.96
T*(8,L)V*C20	HD60	1.04	1.03	0.92
T*(8,L)V*C20	UC48C	1.00	1.02	0.94
T*(8,L)V*C20	UC60C	1.00	0.99	0.92
T*(8,L)X*B12	FC/MC/PC43B	1.00	0.99	0.96
T*(8,L)X*C16	FC/MC/PC43C	1.02	1.05	0.98
T*(8,L)X*C16	FC/MC/PC48C	1.04	1.03	0.98
T*(8,L)X*C16	FC/MC62D	1.04	1.04	0.96
T*(8,L)X*C16	FC/PC60C	1.02	1.03	0.98
T*(8,L)X*C16	FC64D	1.04	1.05	0.96
T*(8,L)X*C16	HD48	1.02	1.02	0.96
T*(8,L)X*C16	UC48C	0.99	0.98	0.94
T*(8,L)X*C20	FC/MC/PC43C	1.02	1.03	0.98
T*(8,L)X*C20	FC/MC/PC48C	1.04	1.05	0.98
T*(8,L)X*C20	FC/MC/PC60D	1.02	1.03	0.98
T*(8,L)X*C20	FC/MC62D	1.04	1.04	0.96
T*(8,L)X*C20	FC64D	1.04	1.07	0.96
T*(8,L)X*C20	UC48C	1.00	1.01	0.95
T*9(C,V)*B12	HD48	0.99	0.93	0.95
T*9(C,V)*C16	FC/MC/PC43C	1.01	1.01	0.97
T*9(C,V)*C16	FC/MC/PC48C	1.04	1.03	0.96
T*9(C,V)*C16	FC/PC60C	1.02	1.02	0.98
T*9(C,V)*C16	FC64D	1.04	1.05	0.98
T*9(C,V)*C16	HD48	1.02	1.01	0.96
T*9(C,V)*C16	HD60	1.04	1.03	0.98
T*9(C,V)*C16	UC48C	0.99	1.01	0.95
T*9(C,V)*C16	UC60C	0.99	0.97	0.97
T*9(C,V)*C20	FC/MC/PC43C	1.02	1.01	0.98
T*9(C,V)*C20	FC/MC/PC48C	1.04	1.03	0.98
T*9(C,V)*C20	FC/PC60C	1.02	1.03	0.95
T*9(C,V)*C20	FC64D	1.04	1.05	0.96
T*9(C,V)*C20	HD48	1.02	1.01	0.98
T*9(C,V)*C20	HD60	1.04	1.03	0.96
T*9(C,V)*C20	UC48C	0.99	1.01	0.96
T*9(C,V)*C20	UC60C	1.00	0.97	0.96
T*9(C,V)*D20	FC/MC/PC48D	1.04	1.03	0.96
T*9(C,V)*D20	FC/MC/PC60D	1.04	1.03	0.95
T*9(C,V)*D20	FC/MC62D	1.04	1.04	0.96
T*9(C,V)*D20	FC64D	1.04	1.00	0.96
T*9(C,V)*D20	HD48	1.02	1.01	0.96
T*9(C,V)*D20	HD60	1.04	1.03	0.95
T*9(C,V)*D20	UC48D	0.99	1.01	0.94
T*9(C,V)*D20	UC60D	1.00	0.98	0.95
T*9X*B12	FC/MC/PC43B	0.99	0.95	0.97
T*9X*C16	FC/MC/PC43C	1.02	1.02	0.98
T*9X*C16	FC/MC/PC48C	1.04	1.05	1.00
T*9X*C16	FC/MC62D	1.04	1.04	0.96

Furnaces	Coils	T.C.	S.C.	KW
T*9X*C16	FC/PC60C	1.02	1.03	0.98
T*9X*C16	FC64D	1.04	1.05	0.96
T*9X*C16	HD48	1.04	1.04	1.00
T*9X*C16	UC48C	0.98	0.97	0.96
T*9X*C20	FC/MC/PC43C	1.02	1.03	0.98
T*9X*C20	FC/MC/PC48C	1.04	1.05	1.00
T*9X*C20	FC/MC62D	1.04	1.04	0.96
T*9X*C20	FC/PC60C	1.02	1.03	0.96
T*9X*C20	FC64D	1.04	1.05	0.96
T*9X*C20	HD48	1.04	1.05	1.00
T*9X*C20	UC48C	0.99	0.97	0.97
T*9X*D20	FC/MC/PC48D	1.04	1.05	1.00
T*9X*D20	FC/MC/PC60D	1.04	1.06	0.98
T*9X*D20	FC/MC62D	1.04	1.04	0.96
T*9X*D20	FC64D	1.04	1.00	0.96
T*9X*D20	HD48	1.17	0.90	1.13
T*9X*D20	UC48D	0.99	0.98	0.97
C*(8,L)C*B12	HD48	1.01	0.98	0.97
C*(8,L)C*C16	FC/MC/PC43C	1.02	1.01	0.98
C*(8,L)C*C16	FC/MC/PC48C	1.01	1.01	0.94
C*(8,L)C*C16	FC/PC60C	1.04	1.04	0.95
C*(8,L)C*C16	FC64D	1.04	1.05	0.96
C*(8,L)C*C16	HD48	1.02	1.01	0.95
C*(8,L)C*C16	HD60	1.04	1.03	0.94
C*(8,L)C*C16	UC48C	1.00	1.01	0.95
C*(8,L)C*C16	UC60C	1.00	0.98	0.94
C*(8,L)C*C20	FC/MC/PC43C	1.02	1.01	0.98
C*(8,L)C*C20	FC/MC/PC48C	1.02	1.03	0.94
C*(8,L)C*C20	FC/PC60C	1.04	1.02	0.93
C*(8,L)C*C20	FC64D	1.04	1.05	0.96
C*(8,L)C*C20	HD48	1.04	1.02	0.96
C*(8,L)C*C20	HD60	1.04	1.03	0.92
C*(8,L)C*C20	UC48C	1.00	1.02	0.94
C*(8,L)C*C20	UC60C	1.00	0.99	0.92
C*9C*B12	HD48	0.99	0.93	0.95
C*9C*C16	FC/MC/PC43C	1.01	1.01	0.97
C*9C*C16	FC/MC/PC48C	1.04	1.03	0.96
C*9C*C16	FC/PC60C	1.02	1.02	0.98
C*9C*C16	FC64D	1.04	1.05	0.98
C*9C*C16	HD48	1.02	1.01	0.96
C*9C*C16	HD60	1.04	1.03	0.98
C*9C*C16	UC48C	0.99	1.01	0.95
C*9C*C16	UC60C	0.99	0.97	0.97
C*9C*C20	FC/MC/PC43C	1.02	1.01	0.98
C*9C*C20	FC/MC/PC48C	1.04	1.03	0.98
C*9C*C20	FC/PC60C	1.02	1.03	0.95
C*9C*C20	FC64D	1.04	1.05	0.96
C*9C*C20	HD48	1.02	1.01	0.98
C*9C*C20	HD60	1.04	1.03	0.96
C*9C*C20	UC48C	0.99	1.01	0.96
C*9C*C20	UC60C	1.00	0.97	0.96
C*9C*D20	FC/MC/PC48D	1.04	1.03	0.96
C*9C*D20	FC/MC/PC60D	1.04	1.03	0.95
C*9C*D20	FC/MC62D	1.04	1.04	0.96
C*9C*D20	FC64D	1.04	1.00	0.96
C*9C*D20	HD48	1.02	1.01	0.96
C*9C*D20	HD60	1.04	1.03	0.95
C*9C*D20	UC48D	0.99	1.01	0.94
C*9C*D20	UC60D	1.00	0.98	0.95

COOLING PERFORMANCE DATA																
AIR CONDITIONER MODEL NO.		**TCGF48S41S4(E)**														
INDOOR COIL MODEL NO.		**FC/MC62**														
CONDENSING ENTERING AIR TEMPERATURE	IDCFM	1400					1600					1800				
	ID DB (°F)	80	80	75	80	80	80	80	75	80	80	80	80	75	80	80
	ID WB (°F)	57	62	62	67	72	57	62	62	67	72	57	62	62	67	72
65	T.C.	43.3	48.6	46.2	50.6	54.3	44.9	49.3	47.7	52.2	55.4	46.5	49.9	49.3	53.9	56.5
	S.C.	43.2	39.3	33.6	33.2	26.2	44.8	42.1	35.6	35.0	27.1	46.4	45.0	37.6	36.7	27.9
	KW	2.60	2.62	2.62	2.63	2.67	2.60	2.62	2.62	2.64	2.68	2.61	2.63	2.62	2.65	2.69
75	T.C.	41.8	46.2	44.3	48.6	52.4	43.2	47.0	45.7	50.2	53.6	44.7	47.7	47.2	51.7	54.7
	S.C.	41.7	38.5	32.7	32.4	25.4	43.1	41.2	34.7	34.2	26.4	44.6	43.8	36.6	36.1	27.4
	KW	3.00	3.02	3.02	3.03	3.06	3.01	3.02	3.02	3.04	3.07	3.01	3.03	3.02	3.04	3.08
85	T.C.	40.3	43.8	42.4	46.7	50.5	41.6	44.7	43.7	48.1	51.7	42.9	45.5	45.1	49.5	52.9
	S.C.	40.2	37.8	31.9	31.6	24.7	41.5	40.2	33.7	33.5	25.8	42.8	42.6	35.6	35.4	26.9
	KW	3.40	3.42	3.42	3.43	3.45	3.41	3.42	3.43	3.44	3.46	3.42	3.43	3.43	3.44	3.46
95	T.C.	38.8	41.4	40.5	44.7	48.6	40.0	42.4	41.7	46.0	49.9	41.1	43.3	42.9	47.3	51.1
	S.C.	38.7	37.0	31.0	30.8	24.0	39.8	39.2	32.8	32.8	25.2	41.0	41.5	34.6	34.8	26.3
	KW	3.80	3.82	3.83	3.84	3.84	3.81	3.82	3.83	3.83	3.84	3.82	3.82	3.83	3.83	3.85
105	T.C.	36.6	38.8	38.2	42.2	45.9	37.8	39.9	39.3	43.4	47.0	38.9	40.9	40.5	44.6	48.1
	S.C.	36.6	35.8	29.8	29.8	22.9	37.7	37.7	31.7	31.9	24.1	38.8	39.6	33.6	33.9	25.3
	KW	4.48	4.54	4.53	4.48	4.44	4.47	4.51	4.52	4.46	4.44	4.45	4.48	4.50	4.45	4.45
115	T.C.	34.6	36.3	36.0	39.7	43.2	35.7	37.4	37.0	40.8	44.2	36.8	38.5	38.0	41.9	45.2
	S.C.	34.5	34.5	28.6	28.9	21.8	35.6	36.2	30.6	30.9	23.1	36.7	37.8	32.6	33.0	24.3
	KW	5.14	5.23	5.22	5.10	5.03	5.10	5.17	5.19	5.08	5.03	5.06	5.11	5.16	5.06	5.03
125	T.C.	32.5	33.8	33.7	37.3	40.6	33.6	34.9	34.7	38.3	41.4	34.7	36.1	35.6	39.3	42.3
	S.C.	32.4	33.3	27.4	27.9	20.8	33.5	34.7	29.5	30.0	22.1	34.6	36.0	31.6	32.2	23.3
	KW	5.80	5.92	5.91	5.72	5.61	5.74	5.83	5.86	5.69	5.61	5.67	5.74	5.81	5.66	5.61
NOTE: ALL CAPACITIES INCLUDE INDOOR FAN HEAT. KW VALUES ARE FOR THE SYSTEM (OUTDOOR + INDOOR).																

Multipliers for determining the performance with other indoor sections.

NOTE: For dry bulb temperatures different than those listed (between 73-87 °F), sensible capacity increases by 1060 BTUH per 1000 CFM per degree above the listed temperature and decreases by 1060 BTUH per 1000 CFM per degree below the listed temperature.

Air Handlers	Coils	T.C.	S.C.	KW
–	FC/MC/PC48	0.97	1.00	0.99
–	FC/MC/PC60	0.99	0.97	1.01
–	FC/MC62	1.00	1.00	1.00
–	FC64	1.01	1.03	0.99
–	HD60	1.01	0.99	1.01
–	UC48	0.97	1.00	0.99
–	UC60	0.98	0.97	1.00
AHE48D	–	1.00	0.99	0.96
AHE60D	–	1.01	1.01	0.93
AHR48D	–	0.99	0.98	1.01
AHR60D	–	1.01	1.01	0.99
AHV48D	–	0.99	0.97	0.97
AHV60D	–	1.00	0.99	0.96
AV*48	–	1.00	0.99	0.96
AV*60	–	1.00	0.99	0.96
MV16C	FC/MC48C	0.98	1.01	0.96
MV16C	FC60C	1.00	0.98	0.96
MV20D	FC/MC48D	0.99	1.02	0.95
MV20D	FC/MC60D	1.00	0.98	0.98
MV20D	FC/MC62D	1.02	1.03	0.96
MV20D	FC64D	1.03	1.04	0.95
MX16C	FC/MC48C	0.99	1.04	0.97
MX16C	FC60C	0.99	0.95	0.91
MX20D	FC/MC48D	0.99	1.02	0.93
MX20D	FC/MC60D	0.99	0.95	0.91
MX20D	FC/MC62D	1.02	1.04	0.93
MX20D	FC64D	1.03	1.05	0.92

Furnaces	Coils	T.C.	S.C.	KW
T*(8,L)C*C16	FC/MC/PC48C	0.97	1.00	0.99
T*(8,L)C*C16	FC/MC/PC48D	0.97	1.00	0.99
T*(8,L)C*C16	FC/MC/PC60D	0.99	0.98	0.99
T*(8,L)C*C16	FC/MC62D	1.01	1.02	0.99
T*(8,L)C*C16	FC/PC60C	0.99	0.98	0.99
T*(8,L)C*C16	FC64D	1.02	1.04	0.98
T*(8,L)C*C16	HD60	1.02	0.99	0.98
T*(8,L)C*C16	UC48C	0.97	1.01	0.97
T*(8,L)C*C16	UC60C	0.99	0.98	0.99
T*(8,L)C*C20	FC/MC/PC48C	0.98	1.01	0.98
T*(8,L)C*C20	FC/MC/PC48D	0.98	1.01	0.98
T*(8,L)C*C20	FC/MC/PC60D	0.99	0.98	0.99
T*(8,L)C*C20	FC/MC62D	1.01	1.02	0.97
T*(8,L)C*C20	FC/PC60C	0.99	0.98	0.99
T*(8,L)C*C20	FC64D	1.00	0.98	0.92
T*(8,L)C*C20	HD60	1.02	1.00	0.96
T*(8,L)C*C20	UC48C	0.97	1.01	0.99
T*(8,L)C*C20	UC60C	0.99	0.98	0.97
T*(8,L)V*C16	FC/MC/PC48C	0.97	1.00	0.99
T*(8,L)V*C16	FC/MC/PC48D	0.97	1.00	0.99
T*(8,L)V*C16	FC/MC/PC60D	0.99	0.98	0.99
T*(8,L)V*C16	FC/MC62D	1.01	1.02	0.99
T*(8,L)V*C16	FC/PC60C	0.99	0.98	0.99
T*(8,L)V*C16	FC64D	1.02	1.04	0.98
T*(8,L)V*C16	HD60	1.02	0.99	0.98
T*(8,L)V*C16	UC48C	0.97	1.01	0.97

Continued on next page.

Furnaces	Coils	T.C.	S.C.	KW
T*(8,L)V*C16	UC60C	0.99	0.98	0.99
T*(8,L)V*C20	FC/MC/PC48C	0.98	1.01	0.98
T*(8,L)V*C20	FC/MC/PC48D	0.98	1.01	0.98
T*(8,L)V*C20	FC/MC/PC60D	0.99	0.98	0.99
T*(8,L)V*C20	FC/MC62D	1.01	1.02	0.97
T*(8,L)V*C20	FC/PC60C	0.99	0.98	0.99
T*(8,L)V*C20	FC64D	1.00	0.98	0.92
T*(8,L)V*C20	HD60	1.02	1.00	0.96
T*(8,L)V*C20	UC48C	0.97	1.01	0.99
T*(8,L)V*C20	UC60C	0.99	0.98	0.97
T*(8,L)X*C16	FC/MC/PC48C	0.98	1.01	0.96
T*(8,L)X*C16	FC/MC/PC48D	0.98	1.01	0.96
T*(8,L)X*C16	FC/MC/PC60D	1.00	0.98	0.98
T*(8,L)X*C16	FC/MC62D	1.00	0.95	0.92
T*(8,L)X*C16	FC/PC60C	1.00	0.98	0.98
T*(8,L)X*C16	FC64D	1.01	0.98	0.92
T*(8,L)X*C16	HD60	1.02	1.00	0.96
T*(8,L)X*C16	UC48C	0.98	1.01	0.96
T*(8,L)X*C16	UC60C	0.99	0.98	0.97
T*(8,L)X*C20	FC/MC/PC48C	0.98	1.01	0.94
T*(8,L)X*C20	FC/MC/PC48D	0.98	1.01	0.94
T*(8,L)X*C20	FC/MC/PC60D	1.00	0.98	0.96
T*(8,L)X*C20	FC/MC62D	1.02	1.03	0.96
T*(8,L)X*C20	FC/PC60C	1.00	0.98	0.96
T*(8,L)X*C20	FC64D	1.03	1.04	0.95
T*(8,L)X*C20	HD60	1.03	1.00	0.97
T*(8,L)X*C20	UC48C	0.98	1.01	0.90
T*(8,L)X*C20	UC60C	1.00	0.99	0.92
T*9(C,V)*C16	FC/MC/PC48C	0.97	1.01	0.99
T*9(C,V)*C16	FC/MC/PC48D	0.97	1.01	0.99
T*9(C,V)*C16	FC/MC/PC60D	0.99	0.98	0.99
T*9(C,V)*C16	FC/MC62D	1.01	1.02	0.99
T*9(C,V)*C16	FC/PC60C	0.99	0.98	0.99
T*9(C,V)*C16	FC64D	1.02	1.04	0.98
T*9(C,V)*C16	HD60	1.02	0.99	1.00
T*9(C,V)*C16	UC48C	0.97	1.01	0.99
T*9(C,V)*C16	UC60C	0.99	0.98	1.01
T*9(C,V)*C20	FC/MC/PC48C	0.97	1.01	0.99
T*9(C,V)*C20	FC/MC/PC48D	0.97	1.01	0.99
T*9(C,V)*C20	FC/MC/PC60D	0.99	0.98	0.99
T*9(C,V)*C20	FC/MC62D	1.00	1.02	1.00
T*9(C,V)*C20	FC/PC60C	0.99	0.98	0.99
T*9(C,V)*C20	FC64D	1.01	1.03	0.99
T*9(C,V)*C20	HD60	1.02	0.99	1.00
T*9(C,V)*C20	UC48C	0.97	1.01	0.99
T*9(C,V)*C20	UC60C	0.99	0.98	1.01
T*9(C,V)*D20	FC/MC/PC48D	0.97	1.01	0.99
T*9(C,V)*D20	FC/MC/PC60D	0.99	0.98	0.99
T*9(C,V)*D20	FC/MC62D	1.01	1.02	0.99
T*9(C,V)*D20	FC64D	1.02	1.04	0.98
T*9(C,V)*D20	HD60	1.02	0.99	1.00
T*9(C,V)*D20	UC48D	0.97	1.01	0.99
T*9(C,V)*D20	UC60D	0.99	0.98	0.99
T*9X*C16	FC/MC/PC48C	0.98	1.01	0.96
T*9X*C16	FC/MC/PC48D	0.98	1.01	0.96
T*9X*C16	FC/MC/PC60D	1.00	0.98	0.98
T*9X*C16	FC/MC62D	1.01	1.02	0.97
T*9X*C16	FC/PC60C	1.00	0.98	0.98
T*9X*C16	FC64D	1.02	1.04	0.96
T*9X*C16	HD60	1.02	1.00	0.96
T*9X*C16	UC48C	0.98	1.01	0.96

Furnaces	Coils	T.C.	S.C.	KW
T*9X*C16	UC60C	0.99	0.98	0.97
T*9X*C20	FC/MC/PC48C	0.98	1.01	0.94
T*9X*C20	FC/MC/PC48D	0.98	1.01	0.94
T*9X*C20	FC/MC/PC60D	1.00	0.98	0.96
T*9X*C20	FC/MC62D	1.01	1.02	0.95
T*9X*C20	FC/PC60C	1.00	0.98	0.96
T*9X*C20	FC64D	1.02	1.04	0.94
T*9X*C20	HD60	1.03	1.00	0.97
T*9X*C20	UC48C	0.98	1.01	0.94
T*9X*C20	UC60C	0.99	0.98	0.95
T*9X*D20	FC/MC/PC48D	0.98	1.01	0.96
T*9X*D20	FC/MC/PC60D	1.00	0.97	0.92
T*9X*D20	FC/MC62D	0.99	0.95	0.91
T*9X*D20	FC64D	1.01	0.98	0.92
T*9X*D20	HD60	1.02	1.00	0.96
T*9X*D20	UC48D	0.98	1.01	0.96
T*9X*D20	UC60D	0.99	0.97	0.91
C*(8,L)C*C16	FC/MC/PC48C	0.97	1.00	0.99
C*(8,L)C*C16	FC/MC/PC48D	0.97	1.00	0.99
C*(8,L)C*C16	FC/MC/PC60D	0.99	0.98	0.99
C*(8,L)C*C16	FC/MC62D	1.01	1.02	0.99
C*(8,L)C*C16	FC/PC60C	0.99	0.98	0.99
C*(8,L)C*C16	FC64D	1.02	1.04	0.98
C*(8,L)C*C16	HD60	1.02	0.99	0.98
C*(8,L)C*C16	UC48C	0.97	1.01	0.97
C*(8,L)C*C16	UC60C	0.99	0.98	0.99
C*(8,L)C*C20	FC/MC/PC48C	0.98	1.01	0.98
C*(8,L)C*C20	FC/MC/PC48D	0.98	1.01	0.98
C*(8,L)C*C20	FC/MC/PC60D	0.99	0.98	0.99
C*(8,L)C*C20	FC/MC62D	1.01	1.02	0.97
C*(8,L)C*C20	FC/PC60C	0.99	0.98	0.99
C*(8,L)C*C20	FC64D	1.00	0.98	0.92
C*(8,L)C*C20	HD60	1.02	1.00	0.96
C*(8,L)C*C20	UC48C	0.97	1.01	0.99
C*(8,L)C*C20	UC60C	0.99	0.98	0.97
C*9C*C16	FC/MC/PC48C	0.97	1.01	0.99
C*9C*C16	FC/MC/PC48D	0.97	1.01	0.99
C*9C*C16	FC/MC/PC60D	0.99	0.98	0.99
C*9C*C16	FC/MC62D	1.01	1.02	0.99
C*9C*C16	FC/PC60C	0.99	0.98	0.99
C*9C*C16	FC64D	1.02	1.04	0.98
C*9C*C16	HD60	1.02	0.99	1.00
C*9C*C16	UC48C	0.97	1.01	0.99
C*9C*C16	UC60C	0.99	0.98	1.01
C*9C*C20	FC/MC/PC48C	0.97	1.01	0.99
C*9C*C20	FC/MC/PC48D	0.97	1.01	0.99
C*9C*C20	FC/MC/PC60D	0.99	0.98	0.99
C*9C*C20	FC/MC62D	1.00	1.02	1.00
C*9C*C20	FC/PC60C	0.99	0.98	0.99
C*9C*C20	FC64D	1.01	1.03	0.99
C*9C*C20	HD60	1.02	0.99	1.00
C*9C*C20	UC48C	0.97	1.01	0.99
C*9C*C20	UC60C	0.99	0.98	1.01
C*9C*D20	FC/MC/PC48D	0.97	1.01	0.99
C*9C*D20	FC/MC/PC60D	0.99	0.98	0.99
C*9C*D20	FC/MC62D	1.01	1.02	0.99
C*9C*D20	FC64D	1.02	1.04	0.98
C*9C*D20	HD60	1.02	0.99	1.00
C*9C*D20	UC48D	0.97	1.01	0.99
C*9C*D20	UC60D	0.99	0.98	0.99

COOLING PERFORMANCE DATA																
AIR CONDITIONER MODEL NO.		**TCGF60S41S4(E)**														
INDOOR COIL MODEL NO.		**FC/MC62**														
CONDENSING ENTERING AIR TEMPERATURE	IDCFM	1600					1800					2000				
	ID DB (°F)	80	80	75	80	80	80	80	75	80	80	80	80	75	80	80
	ID WB (°F)	57	62	62	67	72	57	62	62	67	72	57	62	62	67	72
65	T.C.	52.3	60.4	57.1	61.8	66.7	54.1	61.4	58.6	63.6	67.7	55.9	62.5	60.2	65.3	68.7
	S.C.	51.1	46.8	40.1	39.0	31.5	52.9	49.5	42.1	41.0	32.6	54.7	52.1	44.2	43.0	33.7
	KW	3.12	3.16	3.15	3.19	3.23	3.14	3.17	3.17	3.20	3.25	3.15	3.18	3.18	3.21	3.26
75	T.C.	50.2	57.2	54.7	59.5	64.2	51.9	58.4	56.3	61.0	65.4	53.6	59.5	57.8	62.6	66.6
	S.C.	49.1	45.8	39.1	38.2	30.5	50.8	48.5	41.1	40.2	31.6	52.4	51.1	43.2	42.3	32.8
	KW	3.62	3.66	3.65	3.68	3.72	3.63	3.66	3.66	3.69	3.73	3.65	3.67	3.67	3.70	3.73
85	T.C.	48.1	54.1	52.4	57.1	61.6	49.7	55.3	53.9	58.5	63.1	51.3	56.6	55.4	60.0	64.5
	S.C.	47.0	44.8	38.0	37.3	29.5	48.6	47.4	40.1	39.4	30.7	50.2	50.1	42.2	41.5	31.9
	KW	4.12	4.15	4.15	4.17	4.20	4.13	4.16	4.16	4.18	4.20	4.14	4.16	4.16	4.18	4.21
95	T.C.	46.0	50.9	50.1	54.7	59.1	47.5	52.3	51.6	56.0	60.7	49.0	53.6	53.0	57.3	62.4
	S.C.	45.0	43.7	37.0	36.4	28.5	46.5	46.4	39.1	38.6	29.8	47.9	49.0	41.2	40.8	31.1
	KW	4.61	4.65	4.65	4.66	4.68	4.62	4.65	4.65	4.67	4.68	4.63	4.65	4.65	4.67	4.68
105	T.C.	43.4	47.6	47.3	51.8	56.5	44.7	49.0	48.6	52.9	58.0	46.1	50.5	49.9	54.1	59.4
	S.C.	42.4	42.5	35.8	35.3	27.4	43.8	44.8	37.9	37.5	28.7	45.1	47.2	40.0	39.6	30.0
	KW	5.40	5.43	5.45	5.43	5.43	5.40	5.42	5.44	5.43	5.42	5.39	5.41	5.44	5.43	5.42
115	T.C.	40.8	44.3	44.6	48.9	54.1	42.0	45.9	45.7	50.0	55.3	43.3	47.5	46.9	51.0	56.6
	S.C.	39.9	41.3	34.6	34.3	26.3	41.1	43.3	36.7	36.4	27.6	42.3	45.3	38.8	38.5	28.9
	KW	6.17	6.20	6.22	6.18	6.15	6.15	6.17	6.21	6.17	6.14	6.13	6.15	6.20	6.16	6.14
125	T.C.	38.2	41.1	41.8	46.0	51.6	39.3	42.8	42.9	47.0	52.7	40.5	44.5	43.9	47.9	53.7
	S.C.	37.4	40.1	33.4	33.3	25.2	38.5	41.8	35.5	35.3	26.5	39.6	43.5	37.5	37.4	27.8
	KW	6.93	6.96	6.99	6.92	6.86	6.90	6.92	6.98	6.91	6.86	6.87	6.89	6.96	6.90	6.86
NOTE: ALL CAPACITIES INCLUDE INDOOR FAN HEAT. KW VALUES ARE FOR THE SYSTEM (OUTDOOR + INDOOR).																

Multipliers for determining the performance with other indoor sections.

NOTE: For dry bulb temperatures different than those listed (between 73-87 °F), sensible capacity increases by 1060 BTUH per 1000 CFM per degree above the listed temperature and decreases by 1060 BTUH per 1000 CFM per degree below the listed temperature.

Air Handlers	Coils	T.C.	S.C.	KW
–	FC/MC/PC60	0.97	0.95	0.99
–	FC/MC62	1.00	1.00	1.00
–	FC64	1.02	1.05	1.00
–	HD60	1.01	0.99	1.01
–	UC60	0.98	0.97	1.00
AHE60D	–	1.01	1.03	0.97
AHR60D	–	1.00	1.01	1.02
AHV60D	–	0.99	0.97	0.99

Air Handlers	Coils	T.C.	S.C.	KW
AV*60	–	0.99	0.97	0.99
MV20D	FC/MC60D	1.00	0.99	0.98
MV20D	FC/MC62D	1.01	1.03	0.99
MV20D	FC64D	1.03	1.05	0.99
MX20D	FC/MC60D	0.99	0.97	0.95
MX20D	FC/MC62D	1.02	1.03	0.96
MX20D	FC64D	1.03	1.06	0.95

Furnaces	Coils	T.C.	S.C.	KW
T*(8,L)C*C16	FC/PC60C	0.97	0.93	0.97
T*(8,L)C*C20	FC/MC/PC60D	0.97	0.93	0.95
T*(8,L)C*C20	FC/MC62D	0.99	0.97	0.95
T*(8,L)C*C20	FC/PC60C	0.97	0.93	0.95
T*(8,L)C*C20	FC64D	1.01	1.02	0.95
T*(8,L)C*C20	HD60	1.00	0.96	0.96
T*(8,L)C*C20	UC60C	0.97	0.93	0.95
T*(8,L)V*C16	FC/PC60C	0.97	0.93	0.97
T*(8,L)V*C20	FC/MC/PC60D	0.97	0.93	0.95
T*(8,L)V*C20	FC/MC62D	0.99	0.97	0.95
T*(8,L)V*C20	FC/PC60C	0.97	0.93	0.95
T*(8,L)V*C20	FC64D	1.01	1.02	0.95
T*(8,L)V*C20	HD60	1.00	0.96	0.96
T*(8,L)V*C20	UC60C	0.97	0.93	0.95
T*(8,L)X*C16	FC/PC60C	0.97	0.94	0.95
T*(8,L)X*C16	UC60C	0.97	0.93	0.95
T*(8,L)X*C20	FC/MC/PC60D	0.99	0.97	0.95
T*(8,L)X*C20	FC/MC62D	1.00	0.99	0.94
T*(8,L)X*C20	FC/PC60C	0.97	0.93	0.95
T*(8,L)X*C20	FC64D	1.02	1.04	0.94
T*(8,L)X*C20	HD60	1.01	0.97	0.95
T*(8,L)X*C20	UC60C	0.97	0.93	0.95
T*(8,L)X*C20	UC60D	0.98	0.96	0.94
T*9(C,V)*C20	FC/MC/PC60D	0.98	0.96	0.98
T*9(C,V)*C20	FC/MC62D	0.99	0.97	0.99
T*9(C,V)*C20	FC/PC60C	0.98	0.96	0.98
T*9(C,V)*C20	FC64D	1.01	1.01	0.99
T*9(C,V)*C20	HD60	1.00	0.96	0.98
T*9(C,V)*C20	UC60C	0.97	0.94	0.97
T*9(C,V)*D20	FC/MC/PC60D	0.97	0.93	0.97
T*9(C,V)*D20	FC/MC62D	0.99	0.96	0.97
T*9(C,V)*D20	FC64D	1.01	1.01	0.97
T*9(C,V)*D20	HD60	0.99	0.95	0.97

Furnaces	Coils	T.C.	S.C.	KW
T*9(C,V)*D20	UC60D	0.97	0.93	0.97
T*9X*C16	FC/PC60C	0.97	0.93	0.95
T*9X*C16	UC60C	0.97	0.93	0.95
T*9X*C20	FC/MC/PC60D	0.99	0.97	0.95
T*9X*C20	FC/MC62D	0.99	0.96	0.95
T*9X*C20	FC/PC60C	0.98	0.94	0.94
T*9X*C20	FC64D	1.01	1.01	0.95
T*9X*C20	HD60	1.00	0.96	0.94
T*9X*C20	UC60C	0.97	0.94	0.95
T*9X*C20	UC60D	0.98	0.95	0.94
T*9X*D20	FC/MC/PC60D	0.99	0.97	0.95
T*9X*D20	FC/MC62D	0.99	0.97	0.95
T*9X*D20	FC64D	1.01	1.02	0.95
T*9X*D20	HD60	1.00	0.97	0.96
T*9X*D20	UC60D	0.99	0.99	0.93
C*(8,L)C*C16	FC/PC60C	0.97	0.93	0.97
C*(8,L)C*C20	FC/MC/PC60D	0.97	0.93	0.95
C*(8,L)C*C20	FC/MC62D	0.99	0.97	0.95
C*(8,L)C*C20	FC/PC60C	0.97	0.93	0.95
C*(8,L)C*C20	FC64D	1.01	1.02	0.95
C*(8,L)C*C20	HD60	1.00	0.96	0.96
C*(8,L)C*C20	UC60C	0.97	0.93	0.95
C*9C*C20	FC/MC/PC60D	0.98	0.96	0.98
C*9C*C20	FC/MC62D	0.99	0.97	0.99
C*9C*C20	FC/PC60C	0.98	0.96	0.98
C*9C*C20	FC64D	1.01	1.01	0.99
C*9C*C20	HD60	1.00	0.96	0.98
C*9C*C20	UC60C	0.97	0.94	0.97
C*9C*D20	FC/MC/PC60D	0.97	0.93	0.97
C*9C*D20	FC/MC62D	0.99	0.96	0.97
C*9C*D20	FC64D	1.01	1.01	0.97
C*9C*D20	HD60	0.99	0.95	0.97
C*9C*D20	UC60D	0.97	0.93	0.97

Subject to change without notice. Published in U.S.A.
Copyright © 2012 by Johnson Controls, Inc. All rights reserved.

700700-CTG-B-0812
Supersedes: 700700-CTG-A-0312

York International Corp.
5005 York Drive
Norman, OK 73069