YORK®
Heating and Air Conditioning

TECHNICAL GUIDE
R-410A
AFFINITY™ SERIES
DEZ MODELS
2 - 5 TON
60 Hertz

Description

These York® Affinity™ packaged air conditioners are designed for outdoor installation. Only utility and duct connections are required at the point of installation.

Field-installed electric heater accessories are available to provide electric heat, if required.

Tested in accordance with:

DESIGN CERTIFIED

C US

EFFICIENCY RATING CERTIFIED ama

AHRI CERTIFIED™ www.ahridirectory.org
Unitary Small AC
AHRI Standard 210/240
Certification applies only when the complete system is listed with AHRI.

CERTIFIED

ISO 9000 REGISGRATION
ISO 9001
Certified Quality
Management System

FOR DISTRIBUTION USE ONLY - NOT TO BE USED AT POINT OF RETAIL SALE

Table of Contents

Description 1
Table of Contents 2
Component Location 2
Nomenclature 3
Features and Benefits 3
Guide Specifications 5
Physical Data 6
Capacity Performance 8
Airflow Performance 20
Sound Performance 22
Electrical Data 23
Typical Wiring Diagrams 24
Weights and Dimensions 27

Component Location

Cooling Only

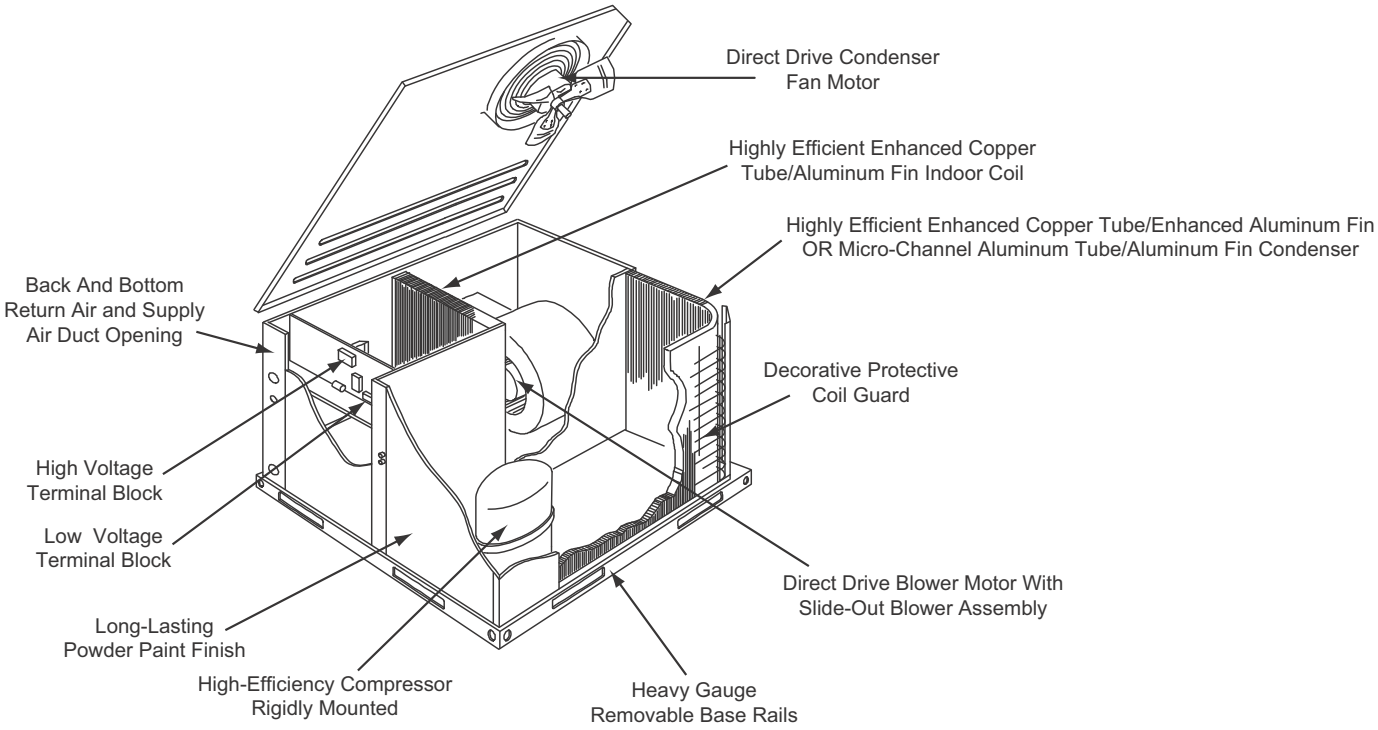

Nomenclature

Cooling Only

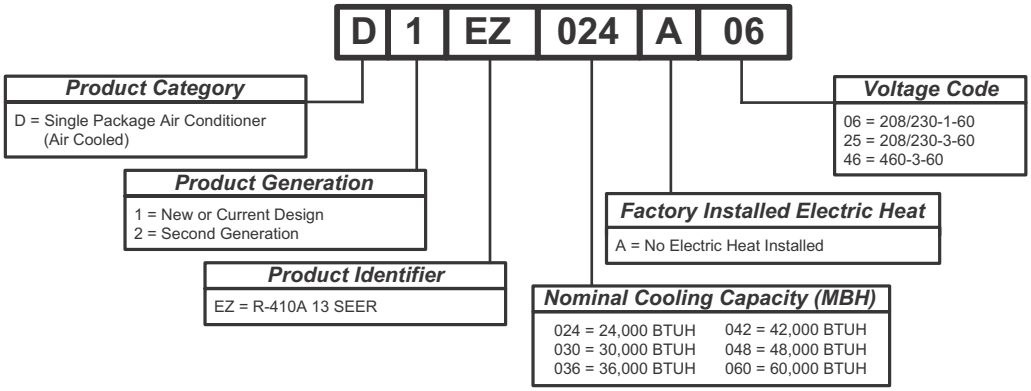

Features and Benefits

Standard Features

- **Operating Efficiency** - All air conditioners provide operating efficiencies of 13 SEER. All efficiencies exceed legislated minimum levels.
- **On Site Flexibility** - All model sizes share a common, compact design cabinet in a single footprint. The installer has the flexibility of setting one curb and placing the proper tonnage unit on that curb after the internal load has been determined. Field convertible duct connections from side shot to down shot allows the installer to have greater flexibility with less inventory.
- **Lower Installation Cost** - Installation time and costs are reduced by easy power and control wiring connections. The small base dimension means less space is required on the ground or roof, plus, the installer can fit this unit between the wheel wells of full size pick-up truck.

  All units are completely wired, charged with R-410A and tested prior to shipment. Unique test stations using a new state of the art computerized process system are used to insure product quality. Refrigerant charge and component part numbers are verified via computers at assembly. Vital run test statistics such as system pressure, motor currents, air velocity and temperature, unit vibration, and gas system safeties are monitored and recorded by the system to insure unit performance.

  Equal size, side supply and return duct connections allows easy hook-up of ducts to match low crawl spaces without transition pieces.
- **Utility Connections Made Easy** - Electric utility knockouts are provided through the bottom as well as the side of the unit. Utility connections can be made quickly and with a minimum amount of field labor. A field supplied and field installed electrical disconnect switch must be installed.
- **Convertible Airflow Design** - The bottom duct openings are covered when they leave the factory ready to be used for a side supply/side return application. If a bottom supply/bottom return application is desired, you simply remove the two panels from the bottom of the unit and place them in the side supply/side return duct openings. No panel cutting is required and no accessory panel is necessary. Convertible airflow design allows maximum field flexibility and minimum inventory.
- **Condensate Pan** - A non-corrosive, long-lasting, water-tight pan is positioned below the evaporator coil to collect and drain all condensate. Less collection of stagnate condensate will build-up. The condensate pan conforms to ASHRAE 62-89 standards (Ventilation for Acceptable Indoor Air Quality).
- **Condensate Drain** - The heavy duty, 3/4 inch NPTI copper connection is more durable over time. The connection is rigidly mounted to assure proper fit and leak tight seal.
- **Durable Finish** - The cabinet is made of pre-painted steel. The pre-treated galvanized steel provides a better paint to steel bond, which resists corrosion and rust creep. Special primer formulas and matted-textured finish insure less fading when exposed to sunlight.
- **Full Perimeter Base Rails** - The easily removable base rails provide a solid foundation for the entire unit and protects the unit during shipment. The rails provide fork lift access from all sides, and rigging holes are also provided so that an overhead crane can be used to place the units on a roof. On applications where the unit is placed on a pad, the base will keep the unit off the pad to deter corrosion. On applications where height is limited, the inch high base rails may be removed on location.
- **More Attractive Appearance** - A single piece Water Shed top cover containing a top discharge condenser fan arrangement requires less square footage on installation and provides a wider variety of installations. The one piece design adds greater water integrity. Rounded corners with water drip edges add to the attractive appearance. The cabinet panels have a non-fibrous insulation that will not release insulation fibers into conditioned area.
- **Top Discharge** - The top discharge condenser fan does not disrupt neighboring areas or dry-out vegetation surrounding the unit. The warm air from the top mounted fan is blown up away from the structure and any landscaping. This allows compact location on multi-unit applications.
- **Condenser Coil Grille** - All DEZ models utilize a decorative “Wire-Form” coil guard to provide impact protection against large objects.
- **Low Operating Sound Level** - The upward air flow carries the normal operating noise up and away from the living area. The rigid top panel effectively isolates any motor sound. Isolator mounted compressor and the rippled fins of the condenser coil muffle the normal fan

motor and compressor operating sounds. The unique formed base pan also aids in sound alterations with it's Super-Structure design. This design strategically places embossments in the pan for optimum strength and rigidity.

- **Fan System** - All models operate over a wide range of design conditions with an electrically commutated fan motor. These units easily match all types of applications and provide greater on site flexibility to match comfort requirement. The cooling speed is factory set and can be field adjusted to a second speed. The heating speed is factory set but can be field adjusted. This allows maximum comfort conditions.
- **Simple Control Circuit** - A low voltage printed circuit board contains a diagnostic indicator light and a low voltage terminal strip. An additional set of pin connectors is also provided to simplify the field interface of external controls. Mate-n-lock plug connectors are used. The electrical control box is not located in the compressor compartment. The controls are mounted on a Control-Tilt control panel to allow the access cover to be removed for trouble shooting and maintenance without affecting the normal system operating pressures. All wiring internal to the unit is color/number coded.
- **Protected Compressor** - The compressor is internally protected against high pressure and temperature. This is accomplished by the simultaneous operation of high pressure relief valve and a temperature sensor which protect the compressor if undesirable operating conditions occur.
- **Pressure Switches** - High pressure and low pressure/ loss of charge switches standard in all units. When abnormal conditions are sensed through the pressure switches, the unit will lock out preventing any further operation until reset or problem is corrected.
- **Exclusive Coil Design** - Grooved copper tubes and enhanced aluminum fin construction improves heat transfer for maximum efficiency and durability.
- **Self Diagnostic Fan Control Module** - Due to this self diagnostic control, less on site time is required to trouble shoot these units.
- **Low Maintenance** - Long life, permanently lubricated condenser and evaporator fan motor bearings need no annual maintenance adding greater reliability to the unit. Blower assembly can be easily cleaned by the unique Slip- Track slide-out blower assembly.
- **Secured Service Access Ports** - Protected, externally mounted, re-usable service access ports are provided on both the high and low lines for ease of evacuating and charging the system. No final field mounting required.
- **Easy Service Access** - A large, single panel covers the electrical controls to make servicing easy. The blower compartment has an additional large panel with a built-in handle tab. Removing this panel will allow the blower assembly to slide-out for easy removal for maintenance and ease of trouble shooting.
- **Replacement Parts** - The installer requires no special training to replace any of the components of these units and does not need to maintain an inventory of unique parts.
- **System Integration** - Each unit has the internal ability to integrate an electronic air cleaner or humidifier to work in conjunction with the base unit.

Field Installed Accessories

- **Economizer Down Discharge/Supply Kit** - Modulating integrated economizer provides simultaneous operation between the mechanical cooling and economizer operation. Independent blade design insures proper control and less than 1% leak rate. Includes hood and mesh bird screen filter integrated into the hood, dry bulb sensor and relief damper. Separate field accessories of single enthalpy and dual enthalpy are also available. A built-in barometric relief of 25% is provided.
- **Single Enthalpy Sensor** - Sensor replaces dry bulb sensor standard in economizer kit. Provides improved economizer operation by sensing the dry bulb temperature from outdoors plus the enthalpy content of the outdoor air.
- **Dual Enthalpy Sensor** - Additional sensor to single enthalpy sensor. Sensor senses both the return air temperature dry bulb and humidity in conjunction with the single enthalpy to determine the most economical mix. Single Enthalpy sensor also required.
- **Hail Guard Kit** - Kit contains protective grilles made of expanded aluminum with full perimeter frame. Sloped hoods are also included to assure maximum protection.
- **Filter/Frame Kit (Single Phase Only)** - Kit contains the necessary hardware to field install return air filters into the base unit. Pre-cut filter racks and appropriate cleanable standard size filters are shipped in one kit. The filter rack is suitable for either 1" or 2" filters. (1" filter is supplied) This kit is available for single phase horizontal or vertical duct application only. Standard in all 3 Phase models.
- **Motorized Fresh Air Damper** - Designed for duct mounted side supply/return and unit mounted down supply/return applications. Damper capable of providing 0% through 50% of outdoor air (field supplied). Closes on power loss, includes hood and screen assembly.
- **Rectangle To Round Adapters** - Kit includes one supply and one return air rectangle to round duct adapter. Adapters are preformed and designed to fit over current duct openings on the base unit. Transition is from side square duct opening to 14" round duct opening.
- **Roof Curbs** - NRCA approved curbs provide proper fit to base unit for rooftop installations. Curbs are designed to be assembled through hinge pins in each corner. Kit also provides seal strip to assure a water tight seal. 8 and 14 inch high roof curbs are available.
- **Manual Outdoor Damper** - Provides 0% through 50% outdoor air capability (field adjustable). Designed for duct mounted side supply/return applications. Includes hood and screen assembly.
- **Wall Thermostat** - The units are designed to operate with 24-volt electronic and electro-mechanical thermostats. All units can operate with single stage heat/single stage cool thermostats - with or without the economizer.
- **Low Ambient Kit** - Kit provides necessary hardware to convert unit to operate in cooling cycle down to 0º F. Standard unit operation 45º F.
- **Transformer Kit** - Kit provides necessary hardware to provide single phase models from factory furnished 40 VA transformer capability to 75 VA transformer capability. (Required on installations with economizer or motorized damper.)

Guide Specifications

General

Units shall be manufactured by Johnson Controls Unitary Products in an ISO 9001 certified facility. YORK's Affinity™ package units give you the flexibility and choices you need in today's market. These packaged air conditioners are designed for outdoor installation. Only utility and duct connections are required at the point of installation.

Description

Units shall be factory-assembled, single packaged, Electric Cooling units, designed for outdoor mounted installation. For SEER ratings, refer to technical literature. They shall have built in, equal size, field convertible duct connections for down discharge supply/return or horizontal discharge supply/return. The units shall be factory wired, piped, charged with R-410A Refrigerant and factory tested prior to shipment. All unit wiring shall be both numbered and color coded. All units shall be manufactured in a facility certified to ISO 9001 standards, and the cooling performance shall be rated in accordance with DOE and AHRI test procedures. Units shall be CSA listed and classified to ANSI Z21.47/CAN/CSA 2.3 standards and UL 1995/CAN/CSA No. 236-M90 conditions.

Unit Cabinet

Unit cabinet shall be constructed of G-90, pre-paint textured steel, certified at 500 hours salt spray test per ASTM-B117 standards. The unit top shall be a single piece "Water Shed" design, with drip edges and no-seam corners to provide optimum water integrity. Unit shall have a rigidly mounted condenser coil guard to provide protection from objects and personnel after installation. Indoor blower section shall be insulated with up to 3/4" thick, aluminum, foil faced insulation, fastened to prevent insulation from entering the air stream. Cabinet panels shall be "large" size, easily removable for servicing and maintenance, with built-in lift handles. Unit shall be built on a formed, "Super-Structure" design base pan, with embossments at critical points to add strength, rigidity and aid in minimizing sound. Full perimeter base rails shall be provided to assure reliable transit of equipment, overhead rigging, for truck access and proper sealing on roof curb applications. Base rails shall be removable, when required, to lower unit height. Filters shall be furnished and be accessible through a removable access door, sealed airtight. Units vertical discharge and return duct configuration shall be designed to fit between standard 24" O.C. beams without modification to building structure, duct work and base unit. Condensate pan shall be internally sloped and conform to ASHRAE 62-89 self-draining standards, with 3/4" NPTI copper, ridged mount connection.

Indoor (Evaporator) Fan Assembly

Fan shall be direct drive design. Fan wheel shall be double-inlet type with forward-curved blades, dynamically balanced to operate smoothly throughout the entire range of operation. Airflow design shall be constant air volume. Bearings shall be sealed and permanently lubricated for longer life and no maintenance. Fan assembly shall be "Slip Track" (slide-out) design for easy removal and cleaning.

Outdoor (Condenser) Fan Assembly

The outdoor fan shall be of the direct-driven propeller type, discharge air vertically, have aluminum blades riveted to corrosion resistant steel spider bracket and shall be statically balanced for smooth operation. The outdoor fan motor shall be totally enclosed with permanently lubricated bearings and internally protected against overload conditions.

Refrigerant Components

Compressors:

a. Shall be fully hermetic type, direct drive, internally protected with internal high-pressure relief and over temperature protection. The hermetic motor shall be suction gas cooled and have a voltage range of +/- 10% of the unit nameplate voltage.
b. Shall have internal isolation and sound muffling to minimize vibration and noise, and be externally isolated on a dedicated, independent mounting.

Coils:

a. Evaporator coils shall have aluminum plate fins mechanically bonded to seamless internally enhanced copper tubes with all joints brazed.
b. Evaporator coil shall be of the direct expansion, draw through design.
c. Condenser coils shall have aluminum plate fins mechanically bonded to seamless internally enhanced copper tubes with all joints brazed or Mircro-Channel aluminum tube, aluminum fins.
d. Condenser coil shall be draw through design.

Refrigerant Circuit and Refrigerant Safety Components shall include:

a. Independent fixed orifice expansion devices.
b. Filter/strainer to eliminate any foreign matter.

Electric Heating Section (Field Install Accessory)

An electric heating section, with nickel chromium elements, shall be provided in a range of 5 thru 25 KW. The heating section shall have a primary limit control(s) (automatic reset) to prevent the heating element system from operating at an excessive temperature. The Heating Section assembly shall slide out of the unit for easy maintenance and service. Units with Electric Heating Sections shall be wired for a single point power supply with branch circuit fusing (where required).

Physical Data

DEZ024-060 Physical Data

Component	Models					
	DEZ024	DEZ030	DEZ036	DEZ042	DEZ048	DEZ060
Nominal Tonnage	**2.0**	**2.5**	**3.0**	**3.5**	**4.0**	**5.0**
AHRI COOLING PERFORMANCE						
Gross Capacity @ AHRI A point (MBH)	24.4	30.7	35.3	42.8	49.5	59.2
AHRI net capacity (MBH)	24.0	30.0	34.5	41.5	48.0	57.5
EER	12.6	11.55	11.35	11.80	11.90	11.05
SEER	13.0	13.0	13.0	13.0	13.0	13.0
Nominal CFM	780	1050	1200	1450	1500	1550
System power (KW)	1.90	2.60	3.04	3.52	4.03	5.21
Refrigerant type	R-410A	R-410A	R-410A	R-410A	R-410A	R-410A
Refrigerant charge (lb-oz)	3-2	3-7	3-6	4-4	4-0	4-8
DIMENSIONS (inches)						
Length	49 1/8	49 1/8	49 1/8	49 1/8	49 1/8	49 1/8
Width	47 1/4	47 1/4	47 1/4	47 1/4	47 1/4	47 1/4
Height	33 1/2	33 1/2	33 1/2	33 1/2	41 1/2	41 1/2
OPERATING WT. (lbs.)	374	375	379	400	401	405
COMPRESSORS						
Type	Recip	Recip	Recip	Recip	Recip	Scroll
Quantity	1	1	1	1	1	1
CONDENSER COIL DATA						
Face area (Sq. Ft.)	11.9	11.9	11.9	11.9	15	15
Rows	1	1	1	1	1	1
Fins per inch	23	23	23	23	23	23
Tube diameter (in.)	0.71/18	0.71/18	0.71/18	0.71/18	0.71/18	0.71/18
Circuitry Type	2-pass Microchannel	2-pass Microchannel	2-pass Microchannel	2-pass Microchannel	2-pass Microchannel	2-pass Microchannel
EVAPORATOR COIL DATA						
Face area (Sq. Ft.)	4.38	4.38	4.38	5.63	5.63	5.63
Rows	2	2	2	3	2	3
Fins per inch	15	15	15	15	16	16
Tube diameter	3/8	3/8	3/8	3/8	3/8	3/8
Circuitry Type	Interlaced	Interlaced	Interlaced	Interlaced	Interlaced	Interlaced
Refrigerant control	Orifice	Orifice	Orifice	Orifice	Orifice	Orifice
CONDENSER FAN DATA						
Fan diameter (Inch)	22	22	22	22	22	22
Type	Prop	Prop	Prop	Prop	Prop	Prop
Drive type	Direct	Direct	Direct	Direct	Direct	Direct
No. speeds	1	1	1	1	1	1
Number of motors	1	1	1	1	1	1
Motor HP each	1/4	1/4	1/4	1/3	1/3	1/3
RPM	850	850	850	1120	1120	1100
Nominal total CFM	1800	1800	2400	3000	3000	3000
DIRECT DRIVE EVAP FAN DATA						
Quantity	1	1	1	1	1	1
Fan Size (Inch)	10 x 8	10 x 8	11 x 10	11 x 10	11 x 10	11 x 10
Type	Centrifugal	Centrifugal	Centrifugal	Centrifugal	Centrifugal	Centrifugal
No. speeds	5	5	5	5	5	5
Motor HP each	1/2	1/2	1/2	3/4	3/4	1
RPM	Variable	Variable	Variable	Variable	Variable	Variable
Frame size	48	48	48	48	48	48
FILTERS						
Quantity - Size	2 - 22 x 14 x 1	2 - 22 x 14 x 1	2 - 22 x 14 x 1	2 - 22 x 14 x 1	2 - 22 x 14 x 1	2 - 22 x 14 x 1

Unit Limitations

Size (Tons)	Model	Unit Voltage	Unit Limitations		
			Applied Voltage		Outdoor DB Temp
			Min	Max	Max (°F)
024 (2.0)	DEZ	208/230-1-60	187	252	125
030 (2.5)	DEZ	208/230-1-60	187	252	125
036 (3.0)	DEZ	208/230-1-60	187	252	125
		208/230-3-60	187	252	125
		460-3-60	432	504	125
042 (3.5)	DEZ	208/230-1-60	187	252	125
048 (4.0)	DEZ	208/230-1-60	187	252	115
		208/230-3-60	187	252	115
		460-3-60	432	504	115
060 (5.0)	DEZ	208/230-1-60	187	252	115
		208/230-3-60	187	252	115
		460-3-60	432	504	115

Capacity Performance

DEZ024-060 Cooling Capacities

DEZ024 (2.0 Ton)

Air on Evaporator Coil		Temperature of Air on Condenser Coil															
		Net Capacity[1] (MBh)	Total Input (kW)[2]	Sensible Capacity (MBh) Return Dry Bulb (°F)						Net Capacity[1] (MBh)	Total Input (kW)[2]	Sensible Capacity (MBh) Return Dry Bulb (°F)					
CFM	WB (°F)			90	85	80	75	70	65			90	85	80	75	70	65
		75°F								**85°F**							
600	77	30.3	1.2	8.6	6.3	4.0	-	-	-	28.6	1.6	10.7	8.3	6.0	-	-	-
	72	28.5	1.4	15.0	12.7	10.4	8.1	-	-	26.4	1.7	15.6	13.2	10.9	8.5	-	-
	67	26.6	1.6	21.4	19.1	16.8	14.5	12.2	-	24.2	1.8	20.5	18.1	15.8	13.5	11.1	-
	62	24.1	1.4	23.8	19.1	16.2	13.9	11.6	9.3	21.8	1.6	21.7	19.3	17.0	14.6	12.3	9.9
	57	23.5	1.4	23.5	20.1	17.6	15.3	13.0	10.7	21.8	1.6	21.8	20.1	17.8	15.4	13.1	10.7
700	77	31.8	1.3	10.5	7.7	5.2	-	-	-	30.0	1.6	12.4	9.6	7.0	-	-	-
	72	29.8	1.5	17.9	15.4	12.9	10.4	-	-	27.7	1.7	18.0	15.4	12.7	10.1	-	-
	67	27.9	1.7	25.4	23.1	20.6	18.1	15.6	-	25.4	1.8	23.6	21.1	18.5	15.9	13.2	-
	62	25.3	1.5	25.1	22.8	20.1	17.6	15.1	12.6	22.9	1.7	22.9	21.7	19.9	17.2	14.6	12.0
	57	24.7	1.5	24.7	23.0	21.7	19.2	16.7	14.2	22.9	1.7	22.9	22.1	20.8	18.2	15.5	12.9
800	77	33.2	1.4	12.4	9.1	6.3	-	-	-	31.5	1.7	14.1	10.9	8.0	-	-	-
	72	31.2	1.6	20.8	18.1	15.4	12.7	-	-	29.1	1.8	20.4	17.5	14.6	11.7	-	-
	67	29.2	1.8	29.2	27.1	24.4	21.7	19.0	-	26.7	1.9	26.7	24.1	21.2	18.3	15.4	-
	62	26.4	1.6	26.4	26.4	24.0	21.3	18.6	15.9	24.0	1.7	24.0	24.0	22.7	19.8	17.0	14.1
	57	25.8	1.6	25.8	25.8	25.8	23.1	20.4	17.7	24.1	1.7	24.1	24.1	23.8	20.9	18.0	15.1
900	72	31.8	1.8	21.0	17.8	14.6	11.4	-	-	29.4	1.9	21.1	17.8	14.6	11.3	-	-
	67	29.7	2.0	29.7	26.6	23.4	20.3	17.1	-	27.0	2.0	27.0	24.4	21.2	17.9	14.7	-
	62	26.9	1.7	26.9	26.9	23.9	20.7	17.5	14.3	24.3	1.8	24.3	24.3	22.7	19.5	16.2	13.0
	57	26.3	1.7	26.3	26.3	25.5	22.3	19.1	16.0	24.3	1.8	24.3	24.3	23.8	20.5	17.3	14.0
1000	72	32.4	1.9	21.2	17.5	13.9	10.2	-	-	29.7	2.0	21.8	18.2	14.6	11.0	-	-
	67	30.3	2.1	30.3	26.1	22.5	18.8	15.2	-	27.2	2.1	27.2	24.8	21.2	17.6	13.9	-
	62	27.4	1.9	27.4	27.4	23.7	20.1	16.4	12.8	24.6	1.9	24.6	24.6	22.7	19.1	15.5	11.9
	57	26.8	1.9	26.8	26.8	25.2	21.5	17.9	14.2	24.6	1.9	24.6	24.6	23.8	20.2	16.6	12.9
		95°F								**105°F**							
600	77	26.8	2.0	12.8	10.4	8.0	-	-	-	24.6	2.1	12.5	9.6	7.2	-	-	-
	72	24.3	1.9	16.2	13.8	11.4	9.0	-	-	21.9	2.1	15.3	12.9	10.5	8.0	-	-
	67	21.8	1.9	19.6	17.2	14.8	12.4	10.0	-	19.2	2.0	18.1	16.2	13.8	11.3	8.9	-
	62	19.5	1.9	19.5	19.5	17.7	15.3	12.9	10.5	18.3	2.0	18.3	18.3	16.3	13.8	11.4	9.0
	57	20.1	1.9	20.1	20.1	17.9	15.6	13.2	10.8	18.6	2.0	18.6	18.5	16.2	13.7	11.3	8.9
700	77	28.3	1.9	14.3	11.6	8.8	-	-	-	25.5	2.1	14.7	10.9	7.9	-	-	-
	72	25.6	1.9	18.1	15.3	12.6	9.9	-	-	22.7	2.1	17.0	14.3	11.5	8.7	-	-
	67	22.9	1.9	21.8	19.1	16.3	13.6	10.9	-	19.9	2.0	19.3	17.6	15.1	12.4	9.6	-
	62	20.6	1.9	20.6	20.6	19.6	16.9	14.1	11.4	18.9	2.0	18.9	18.9	17.9	15.1	12.4	9.6
	57	21.2	1.9	21.2	21.2	19.9	17.1	14.4	11.7	19.3	2.0	19.3	19.2	17.8	15.0	12.3	9.5
800	77	29.7	1.9	15.8	12.8	9.7	-	-	-	26.4	2.1	16.9	12.3	8.6	-	-	-
	72	26.9	1.9	20.0	16.9	13.8	10.7	-	-	23.5	2.1	18.8	15.7	12.5	9.4	-	-
	67	24.1	1.9	24.1	21.0	17.9	14.8	11.8	-	20.6	2.0	20.6	19.1	16.5	13.4	10.3	-
	62	21.6	1.9	21.6	21.6	21.5	18.4	15.3	12.3	19.6	2.0	19.6	19.6	19.5	16.4	13.3	10.2
	57	22.3	1.9	22.3	22.3	21.8	18.7	15.6	12.6	19.9	2.0	19.9	19.9	19.4	16.3	13.2	10.1
900	72	27.0	2.0	21.2	17.9	14.6	11.2	-	-	23.9	2.1	20.1	16.7	13.3	10.0	-	-
	67	24.2	2.0	24.1	22.2	18.9	15.6	12.2	-	20.9	2.1	20.9	19.9	17.6	14.2	10.8	-
	62	21.7	1.9	21.7	21.7	21.6	18.3	15.0	11.7	19.9	2.1	19.9	19.9	19.9	16.5	13.1	9.7
	57	22.3	1.9	22.3	22.3	22.1	18.8	15.4	12.1	20.3	2.1	20.3	20.3	20.0	16.6	13.2	9.8
1000	72	27.0	2.1	22.5	18.9	15.3	11.7	-	-	24.2	2.2	21.4	17.8	14.1	10.5	-	-
	67	24.2	2.1	24.2	23.4	19.9	16.3	12.7	-	21.2	2.2	21.2	20.8	18.6	14.9	11.3	-
	62	21.8	2.0	21.8	21.8	21.8	18.2	14.6	11.0	20.2	2.2	20.2	20.2	20.2	16.6	12.9	9.3
	57	22.4	2.0	22.4	22.4	22.4	18.8	15.2	11.7	20.6	2.2	20.6	20.6	20.6	16.9	13.3	9.6

DEZ024 (2.0 Ton) (Continued)

Air on Evaporator Coil		Temperature of Air on Condenser Coil															
		Net Capacity[1] (MBh)	Total Input (kW)[2]	Sensible Capacity (MBh) Return Dry Bulb (°F)						Net Capacity[1] (MBh)	Total Input (kW)[2]	Sensible Capacity (MBh) Return Dry Bulb (°F)					
CFM	WB (°F)			90	85	80	75	70	65			90	85	80	75	70	65
		115°F								**125°F**							
600	77	22.4	2.3	12.3	8.8	6.3	-	-	-	20.1	2.4	13.1	8.2	5.5	-	-	-
	72	19.5	2.2	14.4	12.0	9.5	7.1	-	-	17.0	2.4	13.5	11.1	8.6	6.1	-	-
	67	16.6	2.2	16.6	15.2	12.7	10.3	7.9	-	13.9	2.3	13.9	13.9	11.7	9.3	6.8	-
	62	17.0	2.2	17.0	17.0	14.8	12.4	9.9	7.5	15.7	2.3	15.7	15.7	13.4	10.9	8.4	6.0
	57	17.0	2.2	17.0	16.8	14.4	11.9	9.5	7.0	15.5	2.3	15.5	15.2	12.6	10.1	7.7	5.2
700	77	22.8	2.3	15.2	10.3	6.9	-	-	-	20.0	2.4	16.1	10.5	6.0	-	-	-
	72	19.8	2.2	16.0	13.2	10.4	7.6	-	-	16.9	2.4	15.0	12.1	9.3	6.5	-	-
	67	16.8	2.2	16.8	16.2	13.9	11.1	8.3	-	13.8	2.3	13.8	13.8	12.7	9.9	7.1	-
	62	17.2	2.1	17.2	17.2	16.2	13.4	10.6	7.8	15.6	2.3	15.6	15.6	14.5	11.6	8.8	6.0
	57	17.3	2.1	17.3	17.2	15.7	12.9	10.1	7.3	15.4	2.3	15.4	15.2	13.6	10.8	8.0	5.2
800	77	23.1	2.3	18.0	11.7	7.5	-	-	-	19.9	2.4	19.1	12.8	6.4	-	-	-
	72	20.1	2.2	17.6	14.4	11.3	8.2	-	-	16.7	2.3	16.4	13.2	10.0	6.9	-	-
	67	17.1	2.2	17.1	17.1	15.1	12.0	8.8	-	13.6	2.3	13.6	13.6	13.6	10.5	7.3	-
	62	17.5	2.1	17.5	17.5	17.5	14.4	11.3	8.1	15.5	2.3	15.5	15.5	15.5	12.4	9.2	6.0
	57	17.6	2.1	17.6	17.6	17.0	13.9	10.7	7.6	15.3	2.3	15.3	15.3	14.7	11.5	8.3	5.1
900	72	20.8	2.3	19.0	15.6	12.1	8.7	-	-	17.7	2.4	17.7	14.4	10.9	7.4	-	-
	67	17.7	2.2	17.7	17.7	16.2	12.8	9.3	-	14.4	2.4	14.4	14.4	14.4	11.4	7.9	-
	62	18.1	2.2	18.1	18.1	18.1	14.7	11.2	7.8	16.3	2.4	16.3	16.3	16.3	12.9	9.4	5.9
	57	18.2	2.2	18.2	18.2	17.9	14.5	11.0	7.6	16.1	2.4	16.1	16.1	15.8	12.3	8.8	5.3
1000	72	21.4	2.4	20.4	16.7	13.0	9.2	-	-	18.6	2.5	18.6	15.6	11.8	8.0	-	-
	67	18.2	2.3	18.2	18.2	17.3	13.6	9.9	-	15.2	2.5	15.2	15.2	15.2	12.3	8.4	-
	62	18.7	2.3	18.7	18.7	18.7	14.9	11.2	7.5	17.1	2.5	17.1	17.1	17.1	13.3	9.5	5.7
	57	18.8	2.3	18.8	18.8	18.8	15.0	11.3	7.6	17.0	2.4	17.0	17.0	17.0	13.2	9.3	5.5

1. These capacities are Net Capacities.
2. These ratings include the compressor, condenser fan and supply air blower motors.

DEZ030 (2.5 Ton)

Air on Evaporator Coil		Temperature of Air on Condenser Coil															
		Net Capacity[1] (MBh)	Total Input (kW)[2]	Sensible Capacity (MBh) Return Dry Bulb (°F)						Net Capacity[1] (MBh)	Total Input (kW)[2]	Sensible Capacity (MBh) Return Dry Bulb (°F)					
CFM	WB (°F)			90	85	80	75	70	65			90	85	80	75	70	65
		75°F								**85°F**							
750	77	35.0	2.5	16.1	13.5	11.0	-	-	-	33.8	2.7	15.7	13.0	10.4	-	-	-
	72	33.6	2.4	20.8	18.2	15.6	13.1	-	-	31.9	2.6	20.2	17.5	14.9	12.2	-	-
	67	32.2	2.4	25.5	22.9	20.3	17.8	15.2	-	30.0	2.6	24.6	22.0	19.4	16.7	14.1	-
	62	29.9	2.4	29.9	26.9	24.3	21.7	19.2	16.6	27.5	2.5	27.5	25.9	23.3	20.6	18.0	15.3
	57	29.9	2.4	29.9	29.9	28.1	25.6	23.0	20.4	27.8	2.5	27.8	27.8	25.9	23.3	20.6	18.0
875	77	35.9	2.5	17.4	14.5	11.6	-	-	-	34.8	2.7	17.1	14.1	11.1	-	-	-
	72	34.5	2.4	22.4	19.5	16.6	13.7	-	-	32.9	2.6	21.9	18.9	15.9	12.9	-	-
	67	33.1	2.4	27.4	24.5	21.6	18.7	15.8	-	30.9	2.6	26.7	23.7	20.7	17.7	14.8	-
	62	30.7	2.4	30.7	29.2	25.8	22.9	20.0	17.2	28.4	2.5	28.4	27.6	24.9	21.9	18.9	15.9
	57	30.7	2.3	30.7	30.7	29.9	27.0	24.1	21.2	28.6	2.5	28.6	28.6	27.7	24.7	21.8	18.8
1000	77	36.8	2.4	18.7	15.5	12.3	-	-	-	35.9	2.7	18.4	15.1	11.8	-	-	-
	72	35.4	2.4	24.0	20.8	17.6	14.4	-	-	33.9	2.6	23.6	20.2	16.9	13.6	-	-
	67	34.0	2.4	29.3	26.1	22.9	19.7	16.5	-	31.9	2.6	28.7	25.4	22.0	18.7	15.4	-
	62	31.5	2.3	31.5	31.5	27.3	24.1	20.9	17.7	29.2	2.5	29.2	29.2	26.5	23.2	19.9	16.6
	57	31.5	2.3	31.5	31.5	31.5	28.5	25.3	22.0	29.5	2.5	29.5	29.5	29.5	26.2	22.9	19.6
1125	72	35.9	2.5	25.0	21.7	18.3	15.0	-	-	34.2	2.7	24.6	21.1	17.6	14.2	-	-
	67	34.4	2.4	30.8	27.2	23.8	20.5	17.2	-	32.2	2.6	29.9	26.4	23.0	19.5	16.0	-
	62	31.9	2.4	31.9	31.9	28.7	25.4	22.0	18.7	29.5	2.6	29.5	29.5	27.6	24.1	20.6	17.2
	57	32.0	2.4	32.0	32.0	32.0	28.7	25.3	22.0	29.8	2.6	29.8	29.8	29.8	26.3	22.9	19.4
1250	72	36.4	2.5	26.0	22.6	19.1	15.6	-	-	34.6	2.7	25.6	22.0	18.4	14.7	-	-
	67	34.9	2.5	32.2	28.3	24.8	21.3	17.8	-	32.5	2.7	31.2	27.5	23.9	20.2	16.6	-
	62	32.4	2.4	32.4	32.4	30.1	26.6	23.2	19.7	29.8	2.6	29.8	29.8	28.7	25.1	21.4	17.8
	57	32.4	2.4	32.4	32.4	32.4	28.9	25.4	22.0	30.1	2.6	30.1	30.1	30.1	26.5	22.8	19.2
		95°F								**105°F**							
750	77	32.5	2.9	15.2	12.5	9.8	-	-	-	30.8	3.1	14.8	12.0	9.2	-	-	-
	72	30.1	2.8	19.5	16.8	14.1	11.4	-	-	27.9	3.0	18.9	16.1	13.3	10.5	-	-
	67	27.7	2.8	23.8	21.1	18.4	15.7	12.9	-	25.1	2.9	23.1	20.3	17.5	14.7	11.9	-
	62	25.1	2.7	25.1	24.9	22.2	19.5	16.8	14.1	22.7	2.9	22.7	22.6	20.3	17.5	14.7	11.9
	57	25.6	2.7	25.6	25.6	23.7	21.0	18.3	15.5	23.8	2.9	23.8	23.8	21.8	19.0	16.2	13.4
875	77	33.7	2.9	16.7	13.6	10.6	-	-	-	31.5	3.1	16.7	12.9	9.8	-	-	-
	72	31.2	2.8	21.3	18.3	15.2	12.1	-	-	28.6	3.0	20.5	17.4	14.2	11.1	-	-
	67	28.8	2.8	25.9	22.9	19.8	16.7	13.7	-	25.8	2.9	24.3	21.8	18.7	15.6	12.4	-
	62	26.0	2.7	26.0	25.9	23.9	20.9	17.8	14.7	23.3	2.9	23.3	23.2	21.8	18.6	15.5	12.3
	57	26.6	2.7	26.6	26.6	25.5	22.5	19.4	16.3	24.4	2.9	24.4	24.4	23.3	20.2	17.1	13.9
1000	77	34.9	2.9	18.1	14.7	11.3	-	-	-	32.3	3.1	18.7	13.9	10.4	-	-	-
	72	32.4	2.8	23.1	19.7	16.3	12.9	-	-	29.3	3.0	22.1	18.7	15.2	11.7	-	-
	67	29.8	2.7	28.0	24.6	21.2	17.8	14.4	-	26.4	2.9	25.5	23.4	19.9	16.4	13.0	-
	62	27.0	2.7	27.0	27.0	25.6	22.2	18.8	15.4	23.8	2.9	23.8	23.8	23.2	19.7	16.2	12.8
	57	27.5	2.7	27.5	27.5	27.4	24.0	20.5	17.1	25.0	2.9	25.0	25.0	24.9	21.4	17.9	14.5
1125	72	32.5	2.9	24.2	20.6	16.9	13.3	-	-	29.8	3.0	23.4	19.7	16.0	12.3	-	-
	67	29.9	2.8	29.1	25.7	22.1	18.5	14.9	-	26.8	3.0	26.4	24.5	21.0	17.2	13.5	-
	62	27.1	2.7	27.1	27.1	26.5	22.9	19.2	15.6	24.2	2.9	24.2	24.2	23.9	20.2	16.5	12.8
	57	27.7	2.7	27.7	27.7	27.6	24.0	20.4	16.8	25.4	2.9	25.4	25.4	25.3	21.6	17.9	14.2
1250	72	32.7	2.9	25.3	21.4	17.6	13.8	-	-	30.3	3.1	24.7	20.7	16.8	12.8	-	-
	67	30.1	2.8	30.1	26.8	23.0	19.2	15.3	-	27.2	3.0	27.2	25.6	22.0	18.1	14.1	-
	62	27.3	2.8	27.3	27.3	27.3	23.5	19.6	15.8	24.6	3.0	24.6	24.6	24.6	20.7	16.7	12.7
	57	27.8	2.8	27.8	27.8	27.8	24.0	20.2	16.4	25.8	3.0	25.8	25.8	25.8	21.9	17.9	13.9

DEZ030 (2.5 Ton) (Continued)

Air on Evaporator Coil		Temperature of Air on Condenser Coil															
		Net Capacity[1] (MBh)	Total Input (kW)[2]	Sensible Capacity (MBh) Return Dry Bulb (°F)						Net Capacity[1] (MBh)	Total Input (kW)[2]	Sensible Capacity (MBh) Return Dry Bulb (°F)					
CFM	WB (°F)			90	85	80	75	70	65			90	85	80	75	70	65
		115°F								**125°F**							
750	77	29.0	3.3	14.3	11.4	8.5	-	-	-	27.2	3.5	15.5	10.8	7.9	-	-	-
	72	25.7	3.2	18.3	15.4	12.5	9.6	-	-	23.5	3.4	17.7	14.7	11.7	8.8	-	-
	67	22.5	3.1	22.3	19.4	16.5	13.7	10.8	-	19.9	3.3	19.9	18.6	15.6	12.7	9.7	-
	62	20.3	3.1	20.3	20.3	18.4	15.6	12.7	9.8	17.9	3.3	17.9	17.9	16.6	13.6	10.6	7.6
	57	22.0	3.1	22.0	22.0	19.9	17.0	14.1	11.3	20.2	3.3	20.2	20.2	18.0	15.1	12.1	9.1
875	77	29.3	3.3	16.8	12.3	9.0	-	-	-	27.1	3.5	18.1	12.2	8.3	-	-	-
	72	26.0	3.2	19.7	16.5	13.3	10.1	-	-	23.4	3.4	18.9	15.7	12.4	9.1	-	-
	67	22.8	3.1	22.7	20.8	17.6	14.4	11.1	-	19.8	3.3	19.8	19.7	16.5	13.2	9.9	-
	62	20.5	3.1	20.5	20.5	19.6	16.4	13.2	10.0	17.7	3.2	17.7	17.7	17.4	14.1	10.8	7.6
	57	22.2	3.1	22.2	22.2	21.2	17.9	14.7	11.5	20.1	3.3	20.1	20.1	19.0	15.7	12.4	9.1
1000	77	29.6	3.3	19.3	13.1	9.6	-	-	-	27.0	3.5	20.7	13.5	8.7	-	-	-
	72	26.3	3.2	21.2	17.6	14.1	10.5	-	-	23.3	3.4	20.2	16.6	13.0	9.4	-	-
	67	23.0	3.1	23.0	22.1	18.6	15.1	11.5	-	19.6	3.3	19.6	19.6	17.3	13.7	10.1	-
	62	20.7	3.0	20.7	20.7	20.7	17.2	13.7	10.1	17.6	3.2	17.6	17.6	17.6	14.7	11.1	7.5
	57	22.5	3.1	22.5	22.5	22.4	18.9	15.3	11.8	20.0	3.2	20.0	20.0	19.9	16.3	12.7	9.1
1125	72	27.1	3.2	22.6	18.8	15.0	11.2	-	-	24.4	3.4	21.9	17.9	14.0	10.1	-	-
	67	23.7	3.1	23.7	23.2	19.8	16.0	12.2	-	20.6	3.3	20.6	20.6	18.7	14.8	10.9	-
	62	21.3	3.1	21.3	21.3	21.3	17.5	13.7	9.9	18.4	3.3	18.4	18.4	18.4	14.9	10.9	7.0
	57	23.1	3.1	23.1	23.1	23.1	19.3	15.5	11.7	20.9	3.3	20.9	20.9	20.8	16.9	13.0	9.1
1250	72	27.8	3.3	24.1	20.0	15.9	11.8	-	-	25.4	3.5	23.5	19.3	15.1	10.9	-	-
	67	24.4	3.2	24.4	24.4	21.0	17.0	12.9	-	21.5	3.4	21.5	21.5	20.1	15.8	11.6	-
	62	21.9	3.1	21.9	21.9	21.9	17.8	13.8	9.7	19.3	3.3	19.3	19.3	19.3	15.0	10.8	6.6
	57	23.8	3.2	23.8	23.8	23.8	19.7	15.6	11.5	21.8	3.4	21.8	21.8	21.8	17.5	13.3	9.1

1. These capacities are Net Capacities.
2. These ratings include the compressor, condenser fan and supply air blower motors.

DEZ036 (3.0 Ton)

Air on Evaporator Coil		Temperature of Air on Condenser Coil															
		Net Capacity[1] (MBh)	Total Input (kW)[2]	Sensible Capacity (MBh) Return Dry Bulb (°F)						Net Capacity[1] (MBh)	Total Input (kW)[2]	Sensible Capacity (MBh) Return Dry Bulb (°F)					
CFM	WB (°F)			90	85	80	75	70	65			90	85	80	75	70	65
		75°F								**85°F**							
900	77	43.2	2.5	19.7	16.7	13.7	-	-	-	41.2	2.7	19.1	16.1	13.0	-	-	-
	72	40.7	2.5	25.6	22.6	19.7	16.7	-	-	38.4	2.7	24.8	21.7	18.7	15.6	-	-
	67	38.2	2.4	31.5	28.5	25.6	22.6	19.6	-	35.6	2.6	30.4	27.4	24.3	21.3	18.2	-
	62	35.5	2.4	35.5	35.2	31.4	28.5	25.5	22.5	33.3	2.6	33.3	33.2	30.1	27.1	24.0	21.0
	57	35.6	2.4	35.6	35.6	33.7	30.7	27.7	24.7	33.3	2.6	33.3	33.3	31.4	28.3	25.3	22.2
1050	77	44.2	2.6	21.1	17.8	14.5	-	-	-	42.2	2.8	20.6	17.2	13.8	-	-	-
	72	41.7	2.6	27.3	24.0	20.7	17.4	-	-	39.3	2.8	26.5	23.1	19.7	16.4	-	-
	67	39.1	2.5	33.6	30.3	27.0	23.7	20.4	-	36.4	2.7	32.5	29.1	25.7	22.3	18.9	-
	62	36.4	2.5	36.4	36.2	33.1	29.8	26.5	23.3	34.1	2.7	34.1	34.0	31.8	28.5	25.1	21.7
	57	36.5	2.5	36.5	36.5	35.5	32.2	28.9	25.6	34.1	2.7	34.1	34.1	33.2	29.8	26.4	23.0
1200	77	45.3	2.7	22.5	18.9	15.2	-	-	-	43.2	2.9	22.0	18.2	14.5	-	-	-
	72	42.7	2.6	29.0	25.4	21.8	18.2	-	-	40.3	2.9	28.3	24.5	20.8	17.1	-	-
	67	40.0	2.6	35.6	32.0	28.4	24.7	21.1	-	37.3	2.8	34.6	30.8	27.1	23.4	19.6	-
	62	37.2	2.6	37.2	37.2	34.9	31.2	27.6	24.0	34.9	2.8	34.9	34.9	33.6	29.8	26.1	22.4
	57	37.3	2.6	37.3	37.3	37.3	33.7	30.1	26.5	34.9	2.8	34.9	34.9	34.9	31.2	27.5	23.8
1300	72	42.7	2.7	29.5	25.8	22.0	18.2	-	-	40.3	2.9	29.0	25.1	21.1	17.2	-	-
	67	40.1	2.7	36.7	32.4	28.6	24.8	21.0	-	37.3	2.9	35.4	31.5	27.5	23.6	19.6	-
	62	37.2	2.6	37.2	37.2	35.6	31.8	28.0	24.2	35.0	2.8	35.0	35.0	34.1	30.1	26.2	22.3
	57	37.4	2.6	37.4	37.4	37.4	33.6	29.8	26.0	35.0	2.9	35.0	35.0	35.0	31.1	27.1	23.2
1400	72	42.7	2.8	30.1	26.1	22.1	18.2	-	-	40.4	3.0	29.7	25.6	21.4	17.3	-	-
	67	40.1	2.8	37.8	32.8	28.8	24.8	20.9	-	37.4	3.0	36.2	32.1	27.9	23.8	19.6	-
	62	37.3	2.7	37.3	37.3	36.4	32.4	28.5	24.5	35.0	2.9	35.0	35.0	34.6	30.4	26.3	22.1
	57	37.4	2.7	37.4	37.4	37.4	33.4	29.5	25.5	35.0	2.9	35.0	35.0	35.0	30.9	26.8	22.6
		95°F								**105°F**							
900	77	39.3	3.0	18.6	15.5	12.3	-	-	-	36.3	3.2	17.5	14.3	11.1	-	-	-
	72	36.1	2.9	24.0	20.8	17.7	14.6	-	-	33.0	3.1	22.7	19.5	16.3	13.2	-	-
	67	32.9	2.8	29.3	26.2	23.1	20.0	16.8	-	29.7	3.0	27.9	24.7	21.6	18.4	15.2	-
	62	31.1	2.8	31.1	31.1	28.8	25.7	22.6	19.4	28.2	3.0	28.2	28.2	25.8	22.7	19.5	16.3
	57	31.1	2.8	31.1	31.1	29.1	25.9	22.8	19.7	28.1	3.0	28.1	28.1	25.9	22.8	19.6	16.4
1050	77	40.2	3.1	20.0	16.6	13.1	-	-	-	37.2	3.3	19.9	15.4	11.9	-	-	-
	72	37.0	3.0	25.7	22.3	18.8	15.3	-	-	33.8	3.2	24.6	21.0	17.5	13.9	-	-
	67	33.7	2.9	31.4	28.0	24.5	21.0	17.5	-	30.4	3.1	29.3	26.6	23.0	19.5	15.9	-
	62	31.9	2.9	31.9	31.9	30.5	27.1	23.6	20.1	28.9	3.1	28.9	28.9	27.6	24.1	20.5	16.9
	57	31.8	2.9	31.8	31.8	30.8	27.3	23.9	20.4	28.8	3.1	28.8	28.8	27.7	24.2	20.6	17.0
1200	77	41.2	3.2	21.5	17.6	13.8	-	-	-	38.1	3.4	22.3	16.6	12.7	-	-	-
	72	37.8	3.1	27.5	23.7	19.8	16.0	-	-	34.6	3.3	26.5	22.5	18.6	14.7	-	-
	67	34.5	3.0	33.5	29.7	25.9	22.0	18.2	-	31.1	3.2	30.6	28.5	24.5	20.6	16.7	-
	62	32.6	3.0	32.6	32.6	32.3	28.4	24.6	20.8	29.6	3.2	29.6	29.6	29.4	25.5	21.5	17.6
	57	32.5	3.0	32.5	32.5	32.5	28.7	24.9	21.0	29.5	3.2	29.5	29.5	29.5	25.6	21.6	17.7
1300	72	37.9	3.2	28.5	24.4	20.3	16.2	-	-	34.7	3.4	27.4	23.3	19.1	14.9	-	-
	67	34.6	3.1	34.1	30.5	26.5	22.4	18.3	-	31.2	3.3	30.9	29.0	25.1	21.0	16.8	-
	62	32.7	3.1	32.7	32.7	32.5	28.4	24.4	20.3	29.6	3.3	29.6	29.6	29.5	25.3	21.1	16.9
	57	32.6	3.1	32.6	32.6	32.6	28.5	24.5	20.4	29.5	3.3	29.5	29.5	29.5	25.3	21.1	17.0
1400	72	38.0	3.3	29.4	25.1	20.8	16.4	-	-	34.7	3.5	28.4	24.0	19.5	15.1	-	-
	67	34.7	3.2	34.7	31.4	27.1	22.7	18.4	-	31.2	3.4	31.2	29.6	25.7	21.3	16.8	-
	62	32.8	3.1	32.8	32.8	32.8	28.5	24.1	19.8	29.6	3.3	29.6	29.6	29.6	25.2	20.8	16.3
	57	32.7	3.1	32.7	32.7	32.7	28.4	24.0	19.7	29.6	3.3	29.6	29.6	29.6	25.1	20.7	16.2

DEZ036 (3.0 Ton) (Continued)

Air on Evaporator Coil		Temperature of Air on Condenser Coil															
		Net Capacity[1] (MBh)	Total Input (kW)[2]	Sensible Capacity (MBh) Return Dry Bulb (°F)						Net Capacity[1] (MBh)	Total Input (kW)[2]	Sensible Capacity (MBh) Return Dry Bulb (°F)					
CFM	WB (°F)			90	85	80	75	70	65			90	85	80	75	70	65
		115°F								**125°F**							
900	77	33.4	3.4	16.4	13.1	9.9	-	-	-	30.4	3.6	17.0	12.0	8.7	-	-	-
	72	29.9	3.3	21.4	18.2	15.0	11.7	-	-	26.8	3.5	20.1	16.8	13.6	10.3	-	-
	67	26.4	3.2	26.4	23.2	20.0	16.8	13.6	-	23.2	3.4	23.2	21.7	18.5	15.2	11.9	-
	62	25.3	3.2	25.3	25.3	22.9	19.6	16.4	13.2	22.3	3.4	22.3	22.3	19.9	16.6	13.3	10.1
	57	25.2	3.2	25.2	25.2	22.8	19.6	16.3	13.1	22.3	3.4	22.3	22.3	19.6	16.4	13.1	9.8
1050	77	34.2	3.5	19.8	14.3	10.7	-	-	-	31.2	3.7	20.8	14.1	9.5	-	-	-
	72	30.7	3.4	23.4	19.8	16.2	12.5	-	-	27.5	3.6	22.3	18.6	14.9	11.1	-	-
	67	27.1	3.3	27.1	25.3	21.6	18.0	14.4	-	23.8	3.5	23.8	23.8	20.2	16.5	12.8	-
	62	25.9	3.3	25.9	25.9	24.7	21.1	17.4	13.8	22.9	3.5	22.9	22.9	21.8	18.1	14.3	10.6
	57	25.8	3.3	25.8	25.8	24.6	21.0	17.4	13.7	22.8	3.5	22.8	22.8	21.5	17.8	14.1	10.4
1200	77	35.1	3.6	23.2	15.6	11.5	-	-	-	32.0	3.9	24.6	16.2	10.4	-	-	-
	72	31.4	3.5	25.5	21.4	17.4	13.3	-	-	28.2	3.7	24.5	20.3	16.1	12.0	-	-
	67	27.8	3.4	27.8	27.3	23.2	19.2	15.1	-	24.4	3.6	24.4	24.4	21.9	17.8	13.6	-
	62	26.5	3.4	26.5	26.5	26.5	22.5	18.4	14.4	23.5	3.6	23.5	23.5	23.5	19.5	15.4	11.2
	57	26.5	3.4	26.5	26.5	26.5	22.4	18.4	14.3	23.4	3.6	23.4	23.4	23.4	19.3	15.1	10.9
1300	72	31.4	3.6	26.4	22.1	17.8	13.5	-	-	28.1	3.8	25.4	21.0	16.6	12.2	-	-
	67	27.7	3.5	27.7	27.5	23.8	19.5	15.2	-	24.3	3.7	24.3	24.3	22.5	18.1	13.7	-
	62	26.5	3.5	26.5	26.5	26.5	22.2	17.9	13.6	23.4	3.7	23.4	23.4	23.4	19.1	14.7	10.3
	57	26.4	3.5	26.4	26.4	26.4	22.1	17.8	13.5	23.4	3.7	23.4	23.4	23.4	18.9	14.5	10.1
1400	72	31.4	3.7	27.4	22.8	18.3	13.7	-	-	28.0	3.9	26.4	21.7	17.0	12.3	-	-
	67	27.7	3.6	27.7	27.7	24.4	19.9	15.3	-	24.2	3.8	24.2	24.2	23.1	18.4	13.8	-
	62	26.5	3.6	26.5	26.5	26.5	21.9	17.4	12.8	23.4	3.8	23.4	23.4	23.4	18.7	14.0	9.3
	57	26.4	3.6	26.4	26.4	26.4	21.9	17.3	12.7	23.3	3.8	23.3	23.3	23.3	18.6	13.9	9.2

1. These capacities are Net Capacities.
2. These ratings include the compressor, condenser fan and supply air blower motors.

DEZ042 (3.5 Ton)

Air on Evaporator Coil		Temperature of Air on Condenser Coil															
		Net Capacity[1] (MBh)	Total Input (kW)[2]	Sensible Capacity (MBh) Return Dry Bulb (°F)						Net Capacity[1] (MBh)	Total Input (kW)[2]	Sensible Capacity (MBh) Return Dry Bulb (°F)					
CFM	WB (°F)			90	85	80	75	70	65			90	85	80	75	70	65
		75°F								**85°F**							
1050	77	52.2	3.2	23.4	19.2	15.0	-	-	-	48.8	3.4	22.6	18.3	14.1	-	-	-
	72	48.2	3.1	29.9	25.7	21.5	17.2	-	-	44.8	3.3	28.9	24.6	20.3	16.0	-	-
	67	44.2	3.0	36.4	32.2	27.9	23.7	19.5	-	40.7	3.3	35.1	30.8	26.5	22.3	18.0	-
	62	40.5	3.0	40.5	39.1	33.6	29.3	25.1	20.9	37.0	3.2	37.0	36.3	32.0	27.7	23.4	19.2
	57	37.5	3.0	37.5	37.5	34.2	29.9	25.7	21.5	35.2	3.2	35.2	35.2	32.0	27.7	23.5	19.2
1225	77	54.7	3.2	25.7	21.3	16.5	-	-	-	51.3	3.4	25.3	20.4	15.5	-	-	-
	72	50.5	3.1	33.2	28.4	23.6	18.8	-	-	47.1	3.4	32.2	27.3	22.4	17.5	-	-
	67	46.3	3.0	40.7	35.6	30.8	26.0	21.2	-	42.8	3.3	39.1	34.2	29.3	24.4	19.5	-
	62	42.5	3.0	42.5	41.8	37.0	32.2	27.4	22.6	38.9	3.3	38.9	38.5	35.4	30.5	25.6	20.7
	57	39.3	3.0	39.3	39.3	37.7	32.9	28.1	23.3	36.9	3.2	36.9	36.9	35.4	30.5	25.6	20.7
1400	77	57.3	3.2	28.1	23.4	18.0	-	-	-	53.8	3.4	28.1	22.5	17.0	-	-	-
	72	52.9	3.1	36.5	31.2	25.8	20.5	-	-	49.4	3.4	35.6	30.1	24.6	19.1	-	-
	67	48.5	3.0	45.0	39.0	33.6	28.3	22.9	-	44.9	3.3	43.2	37.6	32.1	26.6	21.1	-
	62	44.5	3.0	44.5	44.5	40.4	35.0	29.7	24.3	40.8	3.3	40.8	40.8	38.7	33.2	27.7	22.2
	57	41.1	3.0	41.1	41.1	41.1	35.8	30.4	25.1	38.7	3.3	38.7	38.7	38.7	33.2	27.7	22.2
1550	72	53.1	3.2	38.3	32.6	26.8	21.0	-	-	49.5	3.5	37.5	31.6	25.6	19.7	-	-
	67	48.7	3.1	47.0	40.7	34.9	29.1	23.3	-	45.0	3.4	44.1	39.5	33.5	27.6	21.6	-
	62	44.7	3.1	44.7	44.7	42.7	36.9	31.1	25.3	40.9	3.4	40.9	40.9	39.9	33.9	28.0	22.0
	57	41.3	3.1	41.3	41.3	41.3	35.6	29.8	24.0	38.9	3.3	38.9	38.9	38.9	32.9	27.0	21.0
1700	72	53.4	3.3	40.1	33.9	27.7	21.6	-	-	49.6	3.6	39.5	33.1	26.7	20.3	-	-
	67	48.9	3.2	48.9	42.3	36.1	29.9	23.7	-	45.1	3.5	45.1	41.3	34.9	28.5	22.1	-
	62	44.9	3.2	44.9	44.9	44.9	38.7	32.5	26.3	41.0	3.5	41.0	41.0	41.0	34.6	28.2	21.8
	57	41.5	3.2	41.5	41.5	41.5	35.4	29.2	23.0	39.0	3.4	39.0	39.0	39.0	32.6	26.2	19.8
		95°F								**105°F**							
1050	77	45.5	3.6	21.8	17.5	13.2	-	-	-	41.7	3.9	21.6	16.3	12.0	-	-	-
	72	41.4	3.6	27.8	23.5	19.2	14.8	-	-	37.3	3.8	26.3	22.0	17.7	13.4	-	-
	67	37.3	3.5	33.8	29.5	25.2	20.8	16.5	-	32.8	3.7	31.1	27.7	23.4	19.1	14.8	-
	62	33.4	3.5	33.4	33.4	30.4	26.1	21.8	17.5	30.1	3.7	30.1	30.1	27.3	23.0	18.7	14.4
	57	32.8	3.5	32.8	32.8	29.8	25.5	21.2	16.9	29.7	3.7	29.7	29.7	26.9	22.6	18.3	13.9
1225	77	48.0	3.7	24.9	19.6	14.6	-	-	-	44.1	3.9	25.7	18.6	13.4	-	-	-
	72	43.6	3.6	31.2	26.2	21.3	16.3	-	-	39.4	3.8	29.8	24.8	19.8	14.8	-	-
	67	39.3	3.6	37.5	32.9	27.9	22.9	17.9	-	34.7	3.8	33.9	30.9	26.2	21.2	16.2	-
	62	35.2	3.5	35.2	35.2	33.7	28.7	23.7	18.7	31.8	3.7	31.8	31.8	30.4	25.4	20.4	15.5
	57	34.6	3.5	34.6	34.6	33.1	28.1	23.1	18.1	31.4	3.7	31.4	31.4	30.0	25.0	20.0	15.0
1400	77	50.4	3.7	28.1	21.7	16.0	-	-	-	46.4	4.0	29.8	20.9	14.8	-	-	-
	72	45.9	3.6	34.7	29.0	23.3	17.7	-	-	41.5	3.9	33.2	27.5	21.8	16.2	-	-
	67	41.3	3.6	41.3	36.3	30.6	25.0	19.3	-	36.6	3.8	36.6	34.1	28.9	23.2	17.5	-
	62	37.0	3.5	37.0	37.0	37.0	31.4	25.7	20.0	33.6	3.7	33.6	33.6	33.6	27.9	22.2	16.6
	57	36.3	3.5	36.3	36.3	36.3	30.7	25.0	19.3	33.1	3.7	33.1	33.1	33.1	27.4	21.7	16.1
1550	72	45.9	3.7	36.7	30.6	24.5	18.4	-	-	41.5	4.0	35.3	29.2	23.0	16.8	-	-
	67	41.3	3.7	41.3	38.3	32.1	26.0	19.9	-	36.6	3.9	36.6	35.1	30.4	24.2	18.1	-
	62	37.1	3.6	37.1	37.1	37.1	30.9	24.8	18.7	33.6	3.8	33.6	33.6	33.6	27.4	21.2	15.1
	57	36.4	3.6	36.4	36.4	36.4	30.2	24.1	18.0	33.1	3.8	33.1	33.1	33.1	26.9	20.8	14.6
1700	72	45.9	3.8	38.8	32.2	25.6	19.0	-	-	41.6	4.1	37.5	30.8	24.2	17.5	-	-
	67	41.3	3.7	41.3	40.2	33.6	27.1	20.5	-	36.6	4.0	36.6	36.1	31.9	25.3	18.6	-
	62	37.1	3.7	37.1	37.1	37.1	30.5	23.9	17.3	33.6	3.9	33.6	33.6	33.6	26.9	20.3	13.6
	57	36.4	3.7	36.4	36.4	36.4	29.8	23.2	16.6	33.1	3.9	33.1	33.1	33.1	26.4	19.8	13.1

DEZ042 (3.5 Ton) (Continued)

Air on Evaporator Coil		Temperature of Air on Condenser Coil															
		Net Capacity[1] (MBh)	Total Input (kW)[2]	Sensible Capacity (MBh) Return Dry Bulb (°F)						Net Capacity[1] (MBh)	Total Input (kW)[2]	Sensible Capacity (MBh) Return Dry Bulb (°F)					
CFM	WB (°F)			90	85	80	75	70	65			90	85	80	75	70	65
		115°F								**125°F**							
1050	77	37.8	4.2	21.3	15.2	10.9	-	-	-	34.0	4.4	22.8	14.3	9.8	-	-	-
	72	33.1	4.0	24.9	20.6	16.3	12.0	-	-	29.0	4.3	23.4	19.1	14.9	10.6	-	-
	67	28.4	3.9	28.4	26.0	21.7	17.4	13.1	-	24.0	4.1	24.0	24.0	20.0	15.7	11.5	-
	62	26.8	3.9	26.8	26.8	24.1	19.8	15.5	11.2	23.5	4.1	23.5	23.5	21.0	16.7	12.4	8.1
	57	26.5	3.9	26.5	26.5	23.9	19.6	15.3	11.0	23.4	4.1	23.4	23.4	20.9	16.6	12.4	8.1
1225	77	40.2	4.2	26.4	17.7	12.2	-	-	-	36.3	4.5	28.0	18.1	11.1	-	-	-
	72	35.2	4.1	28.3	23.3	18.3	13.3	-	-	30.9	4.3	26.8	21.8	16.9	11.9	-	-
	67	30.2	4.0	30.2	29.0	24.4	19.4	14.4	-	25.6	4.2	25.6	25.6	22.7	17.7	12.7	-
	62	28.4	3.9	28.4	28.4	27.1	22.1	17.1	12.2	25.0	4.1	25.0	25.0	23.8	18.8	13.8	8.9
	57	28.2	3.9	28.2	28.2	26.8	21.9	16.9	11.9	25.0	4.2	25.0	25.0	23.7	18.7	13.8	8.8
1400	77	42.5	4.2	31.5	20.1	13.6	-	-	-	38.5	4.5	33.2	21.8	12.4	-	-	-
	72	37.2	4.1	31.7	26.0	20.3	14.7	-	-	32.9	4.4	30.2	24.5	18.9	13.2	-	-
	67	31.9	4.0	31.9	31.9	27.1	21.4	15.7	-	27.2	4.2	27.2	27.2	25.3	19.6	14.0	-
	62	30.1	4.0	30.1	30.1	30.1	24.4	18.7	13.1	26.6	4.2	26.6	26.6	26.6	20.9	15.2	9.6
	57	29.8	4.0	29.8	29.8	29.8	24.1	18.4	12.8	26.5	4.2	26.5	26.5	26.5	20.8	15.2	9.5
1550	72	37.2	4.2	33.9	27.7	21.5	15.3	-	-	32.9	4.5	32.5	26.3	20.1	13.8	-	-
	67	31.9	4.1	31.9	31.9	28.7	22.5	16.3	-	27.2	4.3	27.2	27.2	26.9	20.7	14.4	-
	62	30.1	4.1	30.1	30.1	30.1	23.9	17.7	11.5	26.6	4.3	26.6	26.6	26.6	20.4	14.1	7.9
	57	29.8	4.1	29.8	29.8	29.8	23.6	17.4	11.2	26.5	4.3	26.5	26.5	26.5	20.3	14.0	7.8
1700	72	37.2	4.3	36.2	29.4	22.7	16.0	-	-	32.9	4.6	32.9	28.1	21.3	14.4	-	-
	67	31.9	4.2	31.9	31.9	30.2	23.5	16.8	-	27.2	4.5	27.2	27.2	27.2	21.7	14.9	-
	62	30.1	4.2	30.1	30.1	30.1	23.4	16.6	9.9	26.6	4.4	26.6	26.6	26.6	19.8	13.0	6.2
	57	29.8	4.2	29.8	29.8	29.8	23.1	16.3	9.6	26.5	4.4	26.5	26.5	26.5	19.7	12.9	6.1

1. These capacities are Net Capacities.
2. These ratings include the compressor, condenser fan and supply air blower motors.

DEZ048 (4.0 Ton)

Air on Evaporator Coil		Temperature of Air on Condenser Coil															
		Net Capacity[1] (MBh)	Total Input (kW)[2]	Sensible Capacity (MBh) Return Dry Bulb (°F)						Net Capacity[1] (MBh)	Total Input (kW)[2]	Sensible Capacity (MBh) Return Dry Bulb (°F)					
CFM	WB (°F)			90	85	80	75	70	65			90	85	80	75	70	65
		75°F								**85°F**							
1200	77	59.7	3.6	26.9	22.8	18.7	-	-	-	57.6	3.9	25.7	21.5	17.2	-	-	-
	72	57.1	3.5	34.5	30.4	26.3	22.2	-	-	54.2	3.9	33.3	29.1	24.9	20.6	-	-
	67	54.5	3.5	42.1	38.0	33.9	29.8	25.7	-	50.9	3.8	41.0	36.7	32.5	28.3	24.0	-
	62	49.7	3.5	49.7	43.2	39.1	35.0	30.9	26.8	47.0	3.8	47.0	43.1	38.9	34.7	30.4	26.2
	57	51.4	3.5	51.4	50.3	46.2	42.1	37.9	33.8	48.4	3.8	48.4	47.3	43.1	38.8	34.6	30.3
1400	77	61.0	3.6	29.0	24.5	19.9	-	-	-	58.7	3.9	27.8	23.1	18.4	-	-	-
	72	58.3	3.6	37.1	32.6	28.1	23.5	-	-	55.2	3.9	35.9	31.2	26.5	21.8	-	-
	67	55.7	3.5	45.3	40.7	36.2	31.7	27.1	-	51.8	3.8	44.0	39.4	34.7	30.0	25.3	-
	62	50.7	3.5	50.7	47.5	41.8	37.2	32.7	28.2	47.9	3.8	47.9	45.9	41.5	36.8	32.1	27.5
	57	52.5	3.5	52.5	52.0	49.3	44.8	40.2	35.7	49.3	3.8	49.3	48.8	45.9	41.3	36.6	31.9
1600	77	62.3	3.6	31.1	26.1	21.2	-	-	-	59.8	3.9	29.8	24.7	19.5	-	-	-
	72	59.6	3.6	39.7	34.8	29.8	24.9	-	-	56.3	3.9	38.5	33.3	28.2	23.1	-	-
	67	56.9	3.5	48.4	43.4	38.5	33.6	28.6	-	52.8	3.8	47.1	42.0	36.8	31.7	26.6	-
	62	51.8	3.5	51.8	51.8	44.4	39.5	34.6	29.6	48.7	3.8	48.7	48.7	44.1	39.0	33.9	28.7
	57	53.6	3.5	53.6	53.6	52.4	47.5	42.6	37.6	50.2	3.8	50.2	50.2	48.8	43.7	38.6	33.4
1700	72	59.4	3.7	40.3	35.2	30.1	25.0	-	-	56.4	4.0	39.2	33.9	28.6	23.3	-	-
	67	56.7	3.6	49.0	43.9	38.9	33.8	28.7	-	52.9	3.9	48.0	42.7	37.4	32.0	26.7	-
	62	51.7	3.6	51.7	51.7	44.8	39.8	34.7	29.6	48.8	3.9	48.8	48.8	44.7	39.4	34.1	28.8
	57	53.5	3.6	53.5	53.5	52.9	47.9	42.8	37.7	50.3	3.9	50.3	50.3	49.5	44.2	38.9	33.6
1800	72	59.2	3.7	40.9	35.6	30.4	25.2	-	-	56.4	4.1	39.9	34.5	29.0	23.5	-	-
	67	56.6	3.7	49.7	44.5	39.2	34.0	28.8	-	52.9	4.0	48.8	43.3	37.9	32.4	26.9	-
	62	51.5	3.7	51.5	51.5	45.2	40.0	34.8	29.5	48.9	4.0	48.9	48.9	45.3	39.8	34.3	28.9
	57	53.3	3.7	53.3	53.3	53.3	48.2	43.0	37.8	50.4	4.0	50.4	50.4	50.2	44.7	39.2	33.7
		95°F								**105°F**							
1200	77	55.5	4.2	24.5	20.1	15.8	-	-	-	54.4	4.6	24.3	19.9	15.4	-	-	-
	72	51.3	4.2	32.2	27.8	23.4	19.1	-	-	48.5	4.5	31.2	26.8	22.3	17.8	-	-
	67	47.2	4.1	39.8	35.4	31.1	26.7	22.4	-	42.6	4.4	38.1	33.6	29.2	24.7	20.3	-
	62	44.3	4.0	44.3	43.0	38.7	34.3	30.0	25.6	41.3	4.3	41.3	40.6	36.1	31.7	27.2	22.7
	57	45.4	4.1	45.4	44.3	39.9	35.6	31.2	26.9	41.7	4.3	41.7	41.1	36.6	32.2	27.7	23.3
1400	77	56.4	4.3	26.5	21.7	16.8	-	-	-	54.5	4.6	27.4	21.3	16.4	-	-	-
	72	52.1	4.2	34.7	29.8	25.0	20.1	-	-	48.6	4.5	33.6	28.6	23.7	18.7	-	-
	67	47.9	4.1	42.8	38.0	33.1	28.3	23.5	-	42.7	4.4	39.8	35.9	31.0	26.0	21.1	-
	62	45.0	4.1	45.0	44.4	41.2	36.4	31.6	26.7	41.4	4.4	41.4	41.1	38.4	33.4	28.5	23.5
	57	46.1	4.1	46.1	45.5	42.6	37.7	32.9	28.0	41.9	4.4	41.9	41.5	38.9	34.0	29.0	24.0
1600	77	57.3	4.3	28.5	23.2	17.9	-	-	-	54.7	4.6	30.5	22.8	17.3	-	-	-
	72	53.0	4.2	37.2	31.9	26.5	21.2	-	-	48.8	4.5	36.0	30.5	25.1	19.6	-	-
	67	48.7	4.1	45.8	40.5	35.2	29.9	24.5	-	42.9	4.5	41.5	38.3	32.8	27.4	21.9	-
	62	45.7	4.1	45.7	45.7	43.8	38.5	33.1	27.8	41.6	4.4	41.6	41.6	40.6	35.2	29.7	24.3
	57	46.8	4.1	46.8	46.8	45.2	39.9	34.6	29.2	42.0	4.4	42.0	42.0	41.2	35.8	30.3	24.8
1700	72	53.3	4.3	38.1	32.6	27.0	21.5	-	-	49.7	4.6	37.2	31.5	25.8	20.1	-	-
	67	49.0	4.2	46.9	41.4	35.8	30.3	24.8	-	43.7	4.6	42.7	39.5	33.7	28.0	22.3	-
	62	46.0	4.2	46.0	46.0	44.6	39.1	33.5	28.0	42.4	4.5	42.4	42.4	41.7	36.0	30.3	24.6
	57	47.1	4.2	47.1	47.1	46.0	40.5	35.0	29.4	42.8	4.5	42.8	42.8	42.3	36.6	30.9	25.2
1800	72	53.7	4.4	39.0	33.3	27.5	21.8	-	-	50.7	4.7	38.5	32.5	26.5	20.5	-	-
	67	49.3	4.3	48.0	42.2	36.5	30.7	25.0	-	44.5	4.7	43.9	40.7	34.7	28.7	22.7	-
	62	46.3	4.3	46.3	46.3	45.4	39.7	33.9	28.2	43.2	4.6	43.2	43.2	42.8	36.8	30.8	24.9
	57	47.4	4.3	47.4	47.4	46.9	41.1	35.4	29.6	43.7	4.6	43.7	43.7	43.4	37.4	31.5	25.5

DEZ048 (4.0 Ton) (Continued)

Air on Evaporator Coil		Temperature of Air on Condenser Coil															
		Net Capacity[1] (MBh)	Total Input (kW)[2]	Sensible Capacity (MBh) Return Dry Bulb (°F)						Net Capacity[1] (MBh)	Total Input (kW)[2]	Sensible Capacity (MBh) Return Dry Bulb (°F)					
CFM	WB (°F)			90	85	80	75	70	65			90	85	80	75	70	65
		115°F								**125°F**							
1200	77	53.3	4.9	24.2	19.6	15.1	-	-	-	52.2	5.2	25.3	19.3	14.7	-	-	-
	72	45.6	4.8	30.3	25.7	21.1	16.6	-	-	42.8	5.1	29.3	24.7	20.0	15.3	-	-
	67	37.9	4.7	36.4	31.8	27.2	22.7	18.1	-	33.3	5.0	33.3	30.0	25.3	20.7	16.0	-
	62	38.4	4.6	38.4	38.1	33.5	29.0	24.4	19.9	35.4	4.9	35.4	35.4	31.0	26.3	21.6	17.0
	57	38.1	4.6	38.1	37.9	33.3	28.8	24.2	19.7	34.5	4.9	34.5	34.5	30.0	25.4	20.7	16.0
1400	77	52.7	4.9	28.4	21.0	15.9	-	-	-	50.9	5.3	30.6	21.9	15.5	-	-	-
	72	45.1	4.8	32.5	27.5	22.4	17.3	-	-	41.6	5.1	31.5	26.3	21.1	15.9	-	-
	67	37.5	4.7	36.7	33.9	28.8	23.8	18.7	-	32.3	5.0	32.3	31.9	26.7	21.5	16.3	-
	62	37.9	4.7	37.9	37.8	35.5	30.4	25.3	20.3	34.4	5.0	34.4	34.4	32.6	27.4	22.2	17.0
	57	37.7	4.7	37.7	37.6	35.3	30.2	25.1	20.0	33.5	4.9	33.5	33.5	31.6	26.4	21.2	16.0
1600	77	52.1	5.0	32.6	22.4	16.8	-	-	-	49.5	5.3	36.0	24.5	16.3	-	-	-
	72	44.6	4.9	34.8	29.2	23.6	18.0	-	-	40.4	5.2	33.6	27.9	22.2	16.4	-	-
	67	37.1	4.8	37.1	36.0	30.4	24.8	19.2	-	31.3	5.1	31.3	31.3	28.0	22.3	16.6	-
	62	37.5	4.7	37.5	37.5	37.5	31.9	26.3	20.7	33.4	5.0	33.4	33.4	33.4	28.6	22.8	17.1
	57	37.2	4.7	37.2	37.2	37.2	31.6	26.0	20.4	32.4	5.0	32.4	32.4	32.4	27.5	21.8	16.0
1700	72	46.2	5.0	36.4	30.5	24.6	18.7	-	-	42.6	5.3	35.5	29.4	23.3	17.3	-	-
	67	38.4	4.9	38.4	37.5	31.6	25.8	19.9	-	33.1	5.2	33.1	33.1	29.6	23.5	17.4	-
	62	38.8	4.8	38.8	38.8	38.8	32.9	27.0	21.1	35.2	5.1	35.2	35.2	35.2	29.8	23.8	17.7
	57	38.6	4.8	38.6	38.6	38.6	32.7	26.8	20.9	34.3	5.1	34.3	34.3	34.3	28.8	22.7	16.6
1800	72	47.8	5.1	37.9	31.7	25.5	19.3	-	-	44.9	5.4	37.4	30.9	24.5	18.1	-	-
	67	39.7	5.0	39.7	39.1	32.9	26.7	20.5	-	35.0	5.3	35.0	35.0	31.1	24.6	18.2	-
	62	40.2	4.9	40.2	40.2	40.2	34.0	27.8	21.6	37.1	5.2	37.1	37.1	37.1	31.1	24.7	18.3
	57	39.9	4.9	39.9	39.9	39.9	33.7	27.5	21.3	36.2	5.2	36.2	36.2	36.2	30.0	23.6	17.2

1. These capacities are Net Capacities.
2. These ratings include the compressor, condenser fan and supply air blower motors.

DEZ060 (5.0 Ton)

Air on Evaporator Coil		Temperature of Air on Condenser Coil															
		Net Capacity[1] (MBh)	Total Input (kW)[2]	Sensible Capacity (MBh) Return Dry Bulb (°F)						Net Capacity[1] (MBh)	Total Input (kW)[2]	Sensible Capacity (MBh) Return Dry Bulb (°F)					
CFM	WB (°F)			90	85	80	75	70	65			90	85	80	75	70	65
		75°F								**85°F**							
1500	77	78.1	4.6	35.6	29.7	23.9	-	-	-	73.3	5.1	33.8	27.9	22.1	-	-	-
	72	71.7	4.5	44.2	38.3	32.4	26.5	-	-	67.0	5.0	42.2	36.3	30.5	24.7	-	-
	67	65.2	4.4	52.7	46.8	40.9	35.0	29.1	-	60.6	4.8	50.6	44.7	38.9	33.1	27.3	-
	62	58.7	4.3	58.7	56.0	49.4	43.5	37.6	31.7	54.7	4.7	54.7	53.4	47.5	41.7	35.9	30.1
	57	51.3	4.2	51.3	51.3	50.1	44.2	38.3	32.5	50.3	4.7	50.3	50.3	48.7	42.9	37.1	31.3
1550	77	78.7	4.6	36.6	30.5	24.4	-	-	-	74.0	5.1	34.6	28.7	22.7	-	-	-
	72	72.2	4.5	45.3	39.2	33.1	27.1	-	-	67.6	4.9	43.3	37.3	31.3	25.4	-	-
	67	65.7	4.3	54.0	47.9	41.9	35.8	29.7	-	61.3	4.8	51.9	45.9	40.0	34.0	28.0	-
	62	59.1	4.2	59.1	57.8	50.5	44.5	38.4	32.3	55.2	4.7	55.2	54.6	48.8	42.8	36.9	30.9
	57	51.6	4.2	51.6	51.6	51.3	45.2	39.1	33.1	50.8	4.6	50.8	50.8	50.0	44.1	38.1	32.1
1600	77	79.3	4.6	37.5	31.2	25.0	-	-	-	74.7	5.1	35.5	29.4	23.3	-	-	-
	72	72.7	4.5	46.4	40.2	33.9	27.7	-	-	68.3	4.9	44.4	38.2	32.1	26.0	-	-
	67	66.2	4.3	55.3	49.1	42.8	36.6	30.3	-	61.9	4.8	53.2	47.1	41.0	34.9	28.8	-
	62	59.6	4.2	59.6	59.6	51.7	45.4	39.2	32.9	55.8	4.7	55.8	55.8	50.1	44.0	37.9	31.8
	57	52.0	4.1	52.0	52.0	52.0	46.2	40.0	33.7	51.3	4.6	51.3	51.3	51.3	45.2	39.1	33.0
1800	72	74.1	4.6	49.1	42.4	35.6	28.9	-	-	69.3	5.1	47.0	40.3	33.7	27.0	-	-
	67	67.5	4.5	58.5	51.8	45.0	38.3	31.5	-	62.8	4.9	56.3	49.6	42.9	36.2	29.5	-
	62	60.7	4.4	60.7	60.7	54.3	47.6	40.8	34.1	56.6	4.8	56.6	56.6	52.4	45.7	39.0	32.4
	57	53.0	4.3	53.0	53.0	53.0	46.5	39.8	33.0	52.1	4.8	52.1	52.1	52.1	45.4	38.7	32.0
2000	72	75.6	4.8	51.9	44.6	37.4	30.1	-	-	70.4	5.3	49.7	42.4	35.2	27.9	-	-
	67	68.8	4.6	61.7	54.5	47.2	40.0	32.7	-	63.7	5.1	59.4	52.1	44.8	37.6	30.3	-
	62	61.9	4.5	61.9	61.9	57.0	49.8	42.5	35.3	57.5	5.0	57.5	57.5	54.8	47.5	40.2	32.9
	57	54.1	4.5	54.1	54.1	54.1	46.8	39.6	32.4	52.9	4.9	52.9	52.9	52.9	45.6	38.3	31.1
		95°F								**105°F**							
1500	77	68.5	5.6	31.9	26.1	20.4	-	-	-	63.9	6.2	29.6	24.0	18.4	-	-	-
	72	62.3	5.4	40.2	34.4	28.7	22.9	-	-	57.6	6.0	37.8	32.2	26.5	20.9	-	-
	67	56.1	5.3	48.4	42.7	36.9	31.2	25.5	-	51.3	5.8	45.9	40.3	34.7	29.1	23.5	-
	62	50.7	5.2	50.7	50.7	45.7	40.0	34.2	28.5	45.9	5.7	45.9	45.9	42.8	37.1	31.5	25.9
	57	49.4	5.1	49.4	49.4	47.3	41.6	35.9	30.1	45.9	5.7	45.9	45.9	44.2	38.6	33.0	27.4
1550	77	69.4	5.6	32.7	26.9	21.0	-	-	-	64.7	6.1	30.5	24.7	18.9	-	-	-
	72	63.1	5.4	41.2	35.4	29.5	23.7	-	-	58.3	6.0	38.8	33.1	27.3	21.5	-	-
	67	56.8	5.2	49.7	43.9	38.0	32.2	26.3	-	51.9	5.8	47.2	41.5	35.7	29.9	24.2	-
	62	51.4	5.1	51.4	51.4	47.1	41.2	35.4	29.5	46.5	5.7	46.5	46.5	44.0	38.2	32.5	26.7
	57	50.0	5.1	50.0	50.0	48.8	42.9	37.1	31.2	46.4	5.7	46.4	46.4	45.5	39.7	34.0	28.2
1600	77	70.2	5.5	33.5	27.6	21.6	-	-	-	65.4	6.1	31.3	25.4	19.5	-	-	-
	72	63.9	5.4	42.3	36.3	30.4	24.4	-	-	59.0	5.9	39.9	34.0	28.1	22.2	-	-
	67	57.5	5.2	51.1	45.1	39.1	33.2	27.2	-	52.5	5.8	48.5	42.6	36.7	30.8	24.9	-
	62	52.0	5.1	52.0	52.0	48.4	42.5	36.5	30.6	47.0	5.7	47.0	47.0	45.2	39.3	33.4	27.5
	57	50.6	5.1	50.6	50.6	50.2	44.2	38.3	32.3	47.0	5.7	47.0	47.0	46.7	40.8	34.9	29.0
1800	72	64.5	5.5	44.9	38.3	31.7	25.0	-	-	59.4	6.1	42.4	35.8	29.3	22.8	-	-
	67	58.1	5.4	54.1	47.4	40.8	34.2	27.6	-	52.9	6.0	50.5	44.8	38.3	31.8	25.3	-
	62	52.5	5.3	52.5	52.5	50.5	43.9	37.2	30.6	47.4	5.8	47.4	47.4	46.3	39.8	33.3	26.8
	57	51.1	5.2	51.1	51.1	50.9	44.3	37.7	31.0	47.3	5.8	47.3	47.3	47.2	40.7	34.2	27.7
2000	72	65.2	5.7	47.6	40.3	33.0	25.7	-	-	59.9	6.3	44.8	37.7	30.6	23.4	-	-
	67	58.7	5.6	57.1	49.8	42.5	35.2	27.9	-	53.3	6.1	52.5	47.1	39.9	32.8	25.7	-
	62	53.1	5.4	53.1	53.1	52.6	45.2	37.9	30.6	47.7	6.0	47.7	47.7	47.4	40.3	33.2	26.1
	57	51.7	5.4	51.7	51.7	51.7	44.4	37.1	29.8	47.7	6.0	47.7	47.7	47.7	40.6	33.5	26.3

DEZ060 (5.0 Ton) (Continued)

Air on Evaporator Coil		Temperature of Air on Condenser Coil															
		Net Capacity[1] (MBh)	Total Input (kW)[2]	Sensible Capacity (MBh) Return Dry Bulb (°F)						Net Capacity[1] (MBh)	Total Input (kW)[2]	Sensible Capacity (MBh) Return Dry Bulb (°F)					
CFM	WB (°F)			90	85	80	75	70	65			90	85	80	75	70	65
		115°F								**125°F**							
1500	77	59.3	6.7	27.4	21.9	16.4	-	-	-	54.7	7.3	25.1	19.7	14.4	-	-	-
	72	52.9	6.6	35.4	29.9	24.4	18.9	-	-	48.2	7.1	33.0	27.6	22.3	16.9	-	-
	67	46.5	6.4	43.4	37.9	32.4	27.0	21.5	-	41.7	7.0	40.9	35.5	30.2	24.8	19.5	-
	62	41.1	6.3	41.1	41.1	39.8	34.3	28.9	23.4	36.3	6.8	36.3	36.3	36.3	31.5	26.2	20.8
	57	42.5	6.3	42.5	42.5	41.1	35.6	30.1	24.6	39.0	6.9	39.0	39.0	37.9	32.6	27.2	21.9
1550	77	60.0	6.7	28.2	22.5	16.8	-	-	-	55.3	7.3	26.4	20.4	14.8	-	-	-
	72	53.5	6.5	36.4	30.8	25.1	19.4	-	-	48.7	7.1	34.0	28.5	22.9	17.3	-	-
	67	47.0	6.4	44.7	39.0	33.3	27.7	22.0	-	42.1	7.0	42.1	36.6	31.0	25.4	19.8	-
	62	41.6	6.3	41.6	41.6	40.9	35.2	29.6	23.9	36.7	6.8	36.7	36.7	36.7	32.2	26.7	21.1
	57	42.9	6.3	42.9	42.9	42.2	36.5	30.9	25.2	39.4	6.9	39.4	39.4	38.9	33.3	27.8	22.2
1600	77	60.6	6.7	29.0	23.2	17.3	-	-	-	55.8	7.2	27.7	21.0	15.1	-	-	-
	72	54.1	6.5	37.5	31.6	25.8	19.9	-	-	49.2	7.1	35.1	29.3	23.5	17.6	-	-
	67	47.5	6.4	46.0	40.1	34.2	28.4	22.5	-	42.5	6.9	42.5	37.6	31.8	26.0	20.1	-
	62	42.0	6.2	42.0	42.0	42.0	36.1	30.3	24.4	37.0	6.8	37.0	37.0	37.0	33.0	27.2	21.3
	57	43.4	6.2	43.4	43.4	43.3	37.5	31.6	25.7	39.8	6.8	39.8	39.8	39.8	34.1	28.3	22.5
1800	72	54.3	6.7	39.8	33.4	27.0	20.6	-	-	49.1	7.3	37.2	30.9	24.6	18.3	-	-
	67	47.7	6.5	46.9	42.2	35.8	29.4	23.0	-	42.5	7.1	42.5	39.6	33.3	27.0	20.7	-
	62	42.2	6.4	42.2	42.2	42.2	35.8	29.4	23.0	37.0	7.0	37.0	37.0	37.0	31.7	25.4	19.2
	57	43.5	6.4	43.5	43.5	43.5	37.1	30.7	24.3	39.7	7.0	39.7	39.7	39.7	33.5	27.3	21.0
2000	72	54.5	6.9	42.0	35.1	28.2	21.2	-	-	49.1	7.4	39.3	32.5	25.8	19.0	-	-
	67	47.9	6.7	47.9	44.4	37.4	30.5	23.5	-	42.5	7.3	42.5	41.6	34.9	28.1	21.4	-
	62	42.3	6.6	42.3	42.3	42.3	35.4	28.5	21.5	37.0	7.1	37.0	37.0	37.0	30.5	23.7	17.0
	57	43.7	6.6	43.7	43.7	43.7	36.8	29.8	22.9	39.7	7.2	39.7	39.7	39.7	33.0	26.2	19.5

1. These capacities are Net Capacities.
2. These ratings include the compressor, condenser fan and supply air blower motors.

Airflow Performance

Side Duct Application

DEZ024-060

Size (Tons)	Model	Unit Speed	External Static Pressure (Inch Water Gauge)														
			0.2			0.4			0.6			0.8			1.0		
			SCFM	W	RPM	SCFM	W	RPM	SCFM	W	RPM	SCFM	W	RPM	SCFM	W	RPM
024 (2.0)	DEZ	Low (1)	726	87	632	629	99	739	-	-	-	-	-	-	-	-	-
		Low/Medium (2)	768	97	651	679	110	754	-	-	-	-	-	-	-	-	-
		Medium (3)	883	131	704	812	147	797	736	162	889	651	177	979	-	-	-
		Medium/High (4)	990	170	755	934	187	839	868	202	920	791	216	1000	696	227	1078
		High (5)	-	-	-	-	-	-	985	245	952	913	257	1022	813	261	1090
030 (2.5)	DEZ	Low (1)	828	110	673	759	125	771	-	-	-	-	-	-	-	-	-
		Low/Medium (2)	953	153	735	894	172	823	824	189	909	-	-	-	-	-	-
		Medium (3)	1091	214	807	1041	234	883	983	253	958	910	269	1033	785	273	1106
		Medium/High (4)	1189	269	861	1144	288	927	1091	305	994	1027	318	1061	912	316	1132
		High (5)	-	-	-	1235	347	970	1186	360	1028	1125	368	1086	1007	352	1147
036 (3.0)	DEZ	Low (1)	966	168	771	890	186	860	-	-	-	-	-	-	-	-	-
		Low/Medium (2)	1148	215	763	1062	237	841	975	259	918	-	-	-	-	-	-
		Medium (3)	1258	255	766	1167	278	839	1075	301	911	980	325	983	-	-	-
		Medium/High (4)	1361	301	778	1267	325	845	1170	349	913	1070	372	981	964	393	1048
		High (5)	1458	354	797	1362	379	859	1262	402	923	1156	423	986	1040	436	1048
042 (3.5)	DEZ	Low (1)	1241	221	702	1151	245	778	1058	268	853	-	-	-	-	-	-
		Low/Medium (2)	1406	299	759	1325	324	826	1242	349	893	1158	373	959	1072	396	1025
		Medium (3)	1536	376	808	1461	403	869	1384	427	928	1305	449	988	1223	468	1046
		Medium/High (4)	1656	466	858	1584	492	912	1509	515	966	1430	533	1019	1344	542	1070
		High (5)	-	-	-	1687	590	955	1611	610	1004	1527	620	1051	1428	615	1097
048 (4.0)	DEZ	Low (1)	1287	222	695	-	-	-	-	-	-	-	-	-	-	-	-
		Low/Medium (2)	1596	397	817	1513	422	875	1432	447	934	1354	474	995	1276	501	1058
		Medium (3)	1705	476	858	1624	501	911	1545	526	966	1466	549	1021	1386	571	1077
		Medium/High (4)	1806	561	895	1726	587	945	1646	610	995	1564	628	1046	1476	639	1096
		High (5)	1898	652	929	1819	679	977	1736	698	1023	1646	709	1069	1547	706	1112
060 (5.0)	DEZ	Low (1)	1580	394	859	1504	420	917	-	-	-	-	-	-	-	-	-
		Low/Medium (2)	1650	448	888	1579	476	945	1499	478	1003	1401	494	1049	-	-	-
		Medium (3)	1854	605	972	1783	629	1020	1703	646	1065	1605	648	1104	1528	659	1146
		Medium/High (4)	2120	856	1073	2021	840	1102	1908	815	1127	1769	772	1148	1567	685	1154
		High (5)	2214	968	1104	2089	918	1121	1949	859	1136	1785	787	1148	1576	689	1154

Bottom Duct Application

DEZ024-060

Size (Tons)	Model	Unit Speed	External Static Pressure (Inch Water Gauge)														
			0.2			0.4			0.6			0.8			1.0		
			SCFM	W	RPM	SCFM	W	RPM	SCFM	W	RPM	SCFM	W	RPM	SCFM	W	RPM
024 (2.0)	DEZ	Low (1)	726	87	632	629	99	739	-	-	-	-	-	-	-	-	-
		Low/Medium (2)	768	97	651	679	110	754	-	-	-	-	-	-	-	-	-
		Medium (3)	883	131	704	812	147	797	736	162	889	651	177	979	-	-	-
		Medium/High (4)	990	170	755	934	187	839	868	202	920	791	216	1000	696	227	1078
		High (5)	-	-	-	-	-	-	985	245	952	913	257	1022	813	261	1090
030 (2.5)	DEZ	Low (1)	828	110	673	759	125	771	-	-	-	-	-	-	-	-	-
		Low/Medium (2)	953	153	735	894	172	823	824	189	909	-	-	-	-	-	-
		Medium (3)	1091	214	807	1041	234	883	983	253	958	910	269	1033	785	273	1106
		Medium/High (4)	1189	269	861	1144	288	927	1091	305	994	1027	318	1061	912	316	1132
		High (5)	-	-	-	1235	347	970	1186	360	1028	1125	368	1086	1007	352	1147
036 (3.0)	DEZ	Low (1)	966	168	771	890	186	860	-	-	-	-	-	-	-	-	-
		Low/Medium (2)	1148	215	763	1062	237	841	975	259	918	-	-	-	-	-	-
		Medium (3)	1258	255	766	1167	278	839	1075	301	911	980	325	983	-	-	-
		Medium/High (4)	1361	301	778	1267	325	845	1170	349	913	1070	372	981	964	393	1048
		High (5)	1458	354	797	1362	379	859	1262	402	923	1156	423	986	1040	436	1048
042 (3.5)	DEZ	Low (1)	1241	221	702	1151	245	778	1058	268	853	-	-	-	-	-	-
		Low/Medium (2)	1406	299	759	1325	324	826	1242	349	893	1158	373	959	1072	396	1025
		Medium (3)	1536	376	808	1461	403	869	1384	427	928	1305	449	988	1223	468	1046
		Medium/High (4)	1656	466	858	1584	492	912	1509	515	966	1430	533	1019	1344	542	1070
		High (5)	-	-	-	1687	590	955	1611	610	1004	1527	620	1051	1428	615	1097
048 (4.0)	DEZ	Low (1)	1287	222	695	-	-	-	-	-	-	-	-	-	-	-	-
		Low/Medium (2)	1596	397	817	1513	422	875	1432	447	934	1354	474	995	1276	501	1058
		Medium (3)	1705	476	858	1624	501	911	1545	526	966	1466	549	1021	1386	571	1077
		Medium/High (4)	1806	561	895	1726	587	945	1646	610	995	1564	628	1046	1476	639	1096
		High (5)	1898	652	929	1819	679	977	1736	698	1023	1646	709	1069	1547	706	1112
060 (5.0)	DEZ	Low (1)	1580	394	859	1504	420	917	-	-	-	-	-	-	-	-	-
		Low/Medium (2)	1650	448	888	1579	476	945	1499	478	1003	1401	494	1049	-	-	-
		Medium (3)	1854	605	972	1783	629	1020	1703	646	1065	1605	648	1104	1528	659	1146
		Medium/High (4)	2120	856	1073	2021	840	1102	1908	815	1127	1769	772	1148	1567	685	1154
		High (5)	2214	968	1104	2089	918	1121	1949	859	1136	1785	787	1148	1576	689	1154

Additional Static Resistance

Size (Tons)	Model	CFM	Wet Indoor Coil	Economizer[1]	Filter/Frame Kit	Electric Heat
024 (2.0)	DEZ	500	0.01	0.00	0.01	0.02
		600	0.01	0.00	0.02	0.03
		700	0.01	0.00	0.02	0.03
		800	0.01	0.01	0.02	0.03
		900	0.01	0.01	0.02	0.04
		1000	0.02	0.01	0.02	0.04
		1100	0.03	0.01	0.03	0.05
		1200	0.04	0.02	0.03	0.06
030 (2.5)	DEZ	700	0.01	0.00	0.02	0.03
		800	0.01	0.01	0.02	0.03
		900	0.01	0.01	0.02	0.04
		1000	0.02	0.01	0.02	0.04
		1100	0.03	0.01	0.03	0.05
		1200	0.04	0.02	0.03	0.06
		1300	0.07	0.03	0.17	-
036 (3.0)	DEZ	700	0.01	0.00	0.02	0.03
		800	0.01	0.01	0.02	0.03
		900	0.01	0.01	0.02	0.04
		1000	0.02	0.01	0.02	0.04
		1100	0.03	0.01	0.03	0.05
		1200	0.04	0.02	0.03	0.06
		1300	0.04	0.03	0.03	0.07
		1400	0.04	0.04	0.03	0.08
042 (3.5)	DEZ	1100	0.03	0.01	0.03	0.05
		1200	0.04	0.02	0.03	0.06
		1300	0.04	0.03	0.03	0.07
		1400	0.04	0.04	0.03	0.08
		1500	0.05	0.05	0.04	0.09
		1600	0.06	0.06	0.05	0.10
048 (4.0)	DEZ	1100	0.03	0.01	0.03	0.05
		1200	0.04	0.02	0.03	0.06
		1300	0.04	0.03	0.03	0.07
		1400	0.04	0.04	0.03	0.08
		1500	0.04	0.05	0.04	0.09
		1600	0.04	0.06	0.05	0.10
		1700	0.05	0.07	0.05	0.11
		1800	0.05	0.07	0.06	0.11
		1900	0.06	0.08	0.06	0.11
		2000	0.07	0.08	0.07	0.12
060 (5.0)	DEZ	1100	0.03	0.01	0.03	0.05
		1200	0.04	0.02	0.03	0.06
		1300	0.04	0.03	0.03	0.07
		1400	0.04	0.04	0.03	0.08
		1500	0.04	0.05	0.04	0.09
		1600	0.04	0.06	0.05	0.10
		1700	0.05	0.07	0.05	0.11
		1800	0.05	0.07	0.06	0.11
		1900	0.06	0.08	0.06	0.11
		2000	0.07	0.08	0.07	0.12

1. The pressure drop through the economizer is greater for 100% outdoor air than for 100% return air. If the resistance of the return air duct is less than 0.25 IWG, the unit will deliver less CFM during full economizer operation.

Electric Heat Minimum Supply Air

Size (Tons)	Model	Voltage	Minimum Supply Air (CFM) Heater kW					
			5.0	7.5	10.0	15.0	20.0	25.0
024 (2.0)	DEZ	208/230-1-60	630	630	800	-	-	-
030 (2.5)	DEZ	208/230-1-60	630	630	800	800	-	-
036 (3.0)	DEZ	208/230-1-60	1070	1070	1070	1070	-	-
		208/230-3-60	1070	1070	1070	1070	-	-
		460-3-60	1070	1070	1070	1070	-	-
042 (3.5)	DEZ	208/230-1-60	1225	1225	1225	1225	-	-
048 (4.0)	DEZ	208/230-1-60	-	-	1200	1430	1430	1430
		208/230-3-60	-	-	1200	1430	1430	1430
		460-3-60	-	-	1200	1430	1430	1430
060 (5.0)	DEZ	208/230-1-60	-	-	1615	1615	1955	1955
		208/230-3-60	-	-	1615	1615	1955	1955
		460-3-60	-	-	1615	1615	1955	1955

Indoor Blower Specifications

Size (Tons)	Model	Motor				
		HP	RPM	Eff.	SF	Frame
024 (2.0)	DEZ	1/2	Variable	0.8	1.0	48
030 (2.5)	DEZ	1/2	Variable	0.8	1.0	48
036 (3.0)	DEZ	1/2	Variable	0.8	1.0	48
042 (3.5)	DEZ	3/4	Variable	0.8	1.0	48
048 (4.0)	DEZ	3/4	Variable	0.8	1.0	48
060 (5.0)	DEZ	1	Variable	0.8	1.0	48

Electric Heat Multipliers

Voltage		kW Capacity Multipliers[1]
Nominal	Applied	
240	208	0.75
	230	0.92
480	460	0.92

1. Electric heaters are rated at nominal voltage. Use this table to determine the electric heat capacity for heaters applied at lower voltages.

Sound Performance

Outdoor Sound Power Levels

Size (Tons)	Model	Sound Rating[1] dB (A)	Octave Band Centerline Frequency (Hz)						
			125	250	500	1000	2000	4000	8000
024 (2.0)	DEZ	80	72	70	65	76	66	72	58
030 (2.5)	DEZ	79	66	67	67	76	75	66	57
036 (3.0)	DEZ	74	65	64	67	68	67	65	59
042 (3.5)	DEZ	74	64	65	68	69	63	59	57
048 (4.0)	DEZ	80	71	72	74	73	69	67	62
060 (5.0)	DEZ	80	68	71	74	73	72	72	60

1. Rated in accordance with AHRI 270 standard.

Electrical Data

DEZ024-060 Cooling Only With/Without Electric Heat

Size (Tons)	Volt	Compressors (each)			OD Fan Motors (each)	Supply Blower Motor	Electric Heat Option				MCA[1] (Amps)	Max Fuse[2]/ Breaker[3] Size (Amps)
		RLA	LRA	MCC	FLA	FLA	Model	kW	Stages	Amps		
024 (2.0)	208/230-1-60	8.3	43	13	1.3	4.1	None	-	-	-	15.8	20
							2NH04500506	3.8 / 5	1	18.1 / 20.8	27.7 / 31.2	30 / 35
							2NH04500706	5.6 / 7.5	2	27.1 / 31.3	39 / 44.2	40 / 45
							2NH04501006	7.5 / 10	2	36.1 / 41.7	50.3 / 57.2	60 / 60
030 (2.5)	208/230-1-60	13.1	74	21	1.3	4.1	None	-	-	-	21.8	30
							2NH04500506	3.8 / 5	1	18.1 / 20.8	27.7 / 31.2	30 / 35
							2NH04500706	5.6 / 7.5	2	27.1 / 31.3	39 / 44.2	40 / 45
							2NH04501006	7.5 / 10	2	36.1 / 41.7	50.3 / 57.2	60 / 60
							2NH04501506	11.3 / 15	2	54.2 / 62.5	72.8 / 83.3	80 / 90
036 (3.0)	208/230-1-60	14.7	74	23	1.3	4.1	None	-	-	-	23.8	30
							2NH04500506	3.8 / 5	1	18.1 / 20.8	27.7 / 31.2	35 / 35
							2NH04500706	5.6 / 7.5	2	27.1 / 31.3	39 / 44.2	40 / 45
							2NH04501006	7.5 / 10	2	36.1 / 41.7	50.3 / 57.2	60 / 60
							2NH04501506	11.3 / 15	2	54.2 / 62.5	72.8 / 83.3	80 / 90
	208/230-3-60	9.1	68	14	1.3	4.1	None	-	-	-	16.8	25
							2NH04501025	7.5 / 10	1	20.8 / 24.1	31.2 / 35.2	35 / 40
							2NH04501525	11.3 / 15	1	31.3 / 36.1	44.2 / 50.2	45 / 60
	460-3-60	4.5	34	7	0.8	4.1	None	-	-	-	10.5	15
							2NH04501046	10	1	12	20.2	25
							2NH04501546	15	1	18	27.7	30
042 (3.5)	208/230-1-60	15.7	88	25	1.7	6.0	None	-	-	-	27.3	35
							2NH04500506	3.8 / 5	1	18.1 / 20.8	30.1 / 33.5	40 / 40
							2NH04500706	5.6 / 7.5	2	27.1 / 31.3	41.4 / 46.6	45 / 50
							2NH04501006	7.5 / 10	2	36.1 / 41.7	52.6 / 59.6	60 / 60
							2NH04501506	11.3 / 15	2	54.2 / 62.5	75.2 / 85.6	80 / 90
048 (4.0)	208/230-1-60	16.8	115	25	1.7	6.0	None	-	-	-	28.7	35
							2NH04501006	7.5 / 10	2	36.1 / 41.7	52.6 / 59.6	60 / 60
							2NH04501506	11.3 / 15	2	54.2 / 62.5	75.2 / 85.6	80 / 90
							2NH04502006	15 / 20	2	72.2 / 83.3	97.8 / 111.7	100 / 125
							2NH04502506	18.8 / 25	2	90.3 / 104.2	120.3 / 137.7	125 / 150
	208/230-3-60	11.2	120	18	1.7	6.0	None	-	-	-	21.7	30
							2NH04501025	7.5 / 10	1	20.8 / 24.1	33.6 / 37.6	35 / 40
							2NH04501525	11.3 / 15	1	31.3 / 36.1	46.6 / 52.6	50 / 60
							2NH04502025	15 / 20	2	41.7 / 48.1	59.6 / 67.6	60 / 70
							2NH04502525	18.8 / 25	2	52.1 / 60.1	72.7 / 82.7	80 / 90
	460-3-60	5.1	50	8	1.0	6.0	None	-	-	-	13.6	15
							2NH04501046	10	1	12	22.5	25
							2NH04501546	15	1	18	30.1	35
							2NH04502046	20	2	24.1	37.6	40
							2NH04502546	25	2	30.1	45.1	50
060 (5.0)	208/230-1-60	26.2	150	41	2.2	7.6	None	-	-	-	42.6	50
							2NH04501006	7.5 / 10	2	36.1 / 41.7	54.6 / 61.6	60 / 70
							2NH04501506	11.3 / 15	2	54.2 / 62.5	77.2 / 87.6	80 / 90
							2NH04502006	15 / 20	2	72.2 / 83.3	99.8 / 113.7	100 / 125
							2NH04502506	18.8 / 25	2	90.3 / 104.2	122.3 / 139.7	125 / 150
	208/230-3-60	17.9	120	28	2.2	7.6	None	-	-	-	32.2	40
							2NH04501025	7.5 / 10	1	20.8 / 24.1	35.6 / 39.6	45 / 50
							2NH04501525	11.3 / 15	1	31.3 / 36.1	48.6 / 54.6	50 / 60
							2NH04502025	15 / 20	2	41.7 / 48.1	61.6 / 69.6	70 / 70
							2NH04502525	18.8 / 25	2	52.1 / 60.1	74.7 / 84.7	80 / 90
	460-3-60	9.6	70	15	1.1	7.6	None	-	-	-	20.7	25
							2NH04501046	10	1	12	24.5	30
							2NH04501546	15	1	18	32.1	35
							2NH04502046	20	2	24.1	39.6	40
							2NH04502546	25	2	30.1	47.1	50

1. Minimum Circuit Ampacity.
2. Maximum Over Current Protection per standard UL 1995.
3. Fuse or HACR circuit breaker size installed at factory or field installed.

Typical Wiring Diagrams

Typical DEZ024-042 Cooling Only 208/230-1-60 volt Wiring Diagram

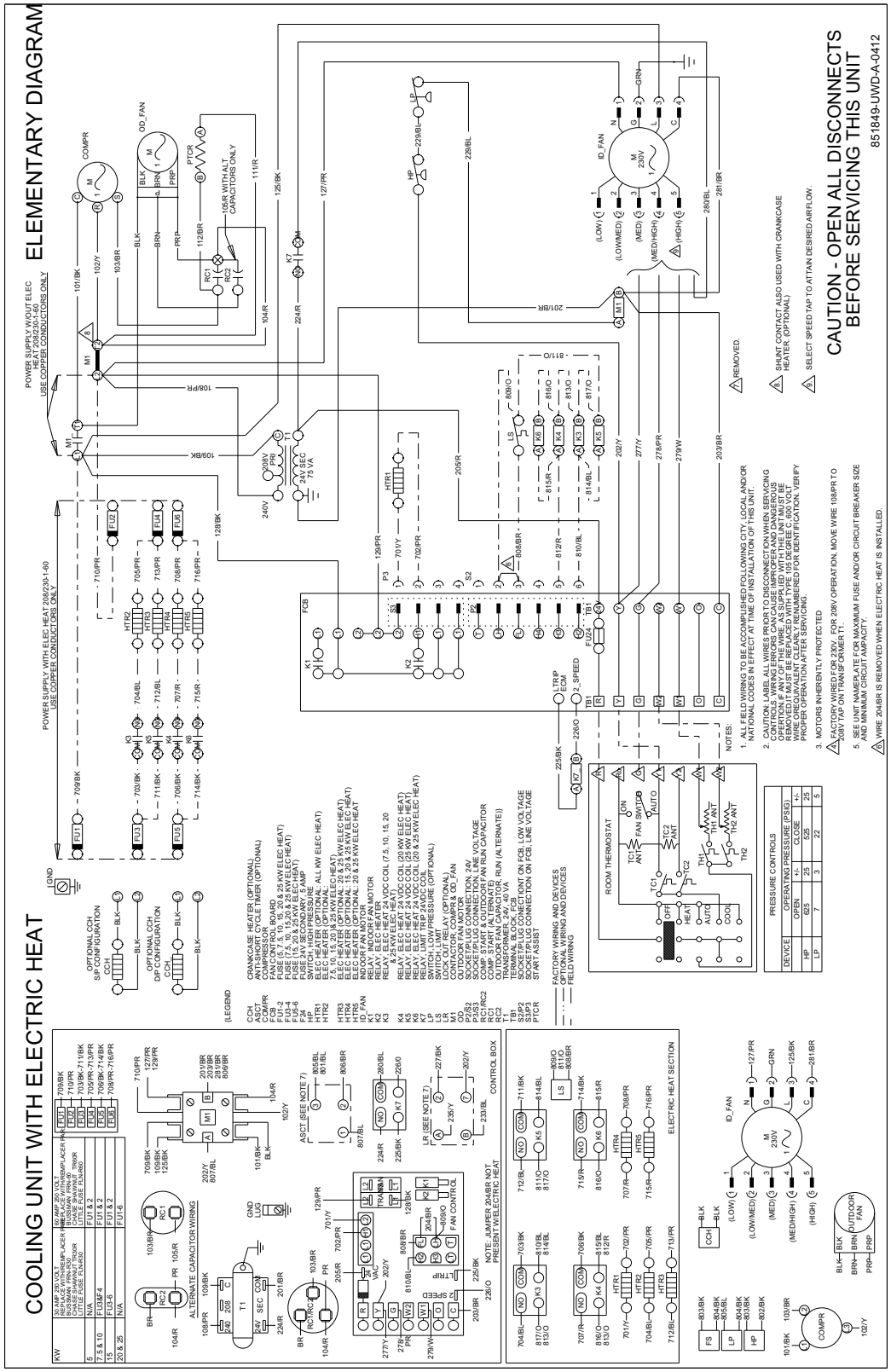

Typical DEZ048 Cooling Only 208/230-1-60 Volt Wiring Diagram

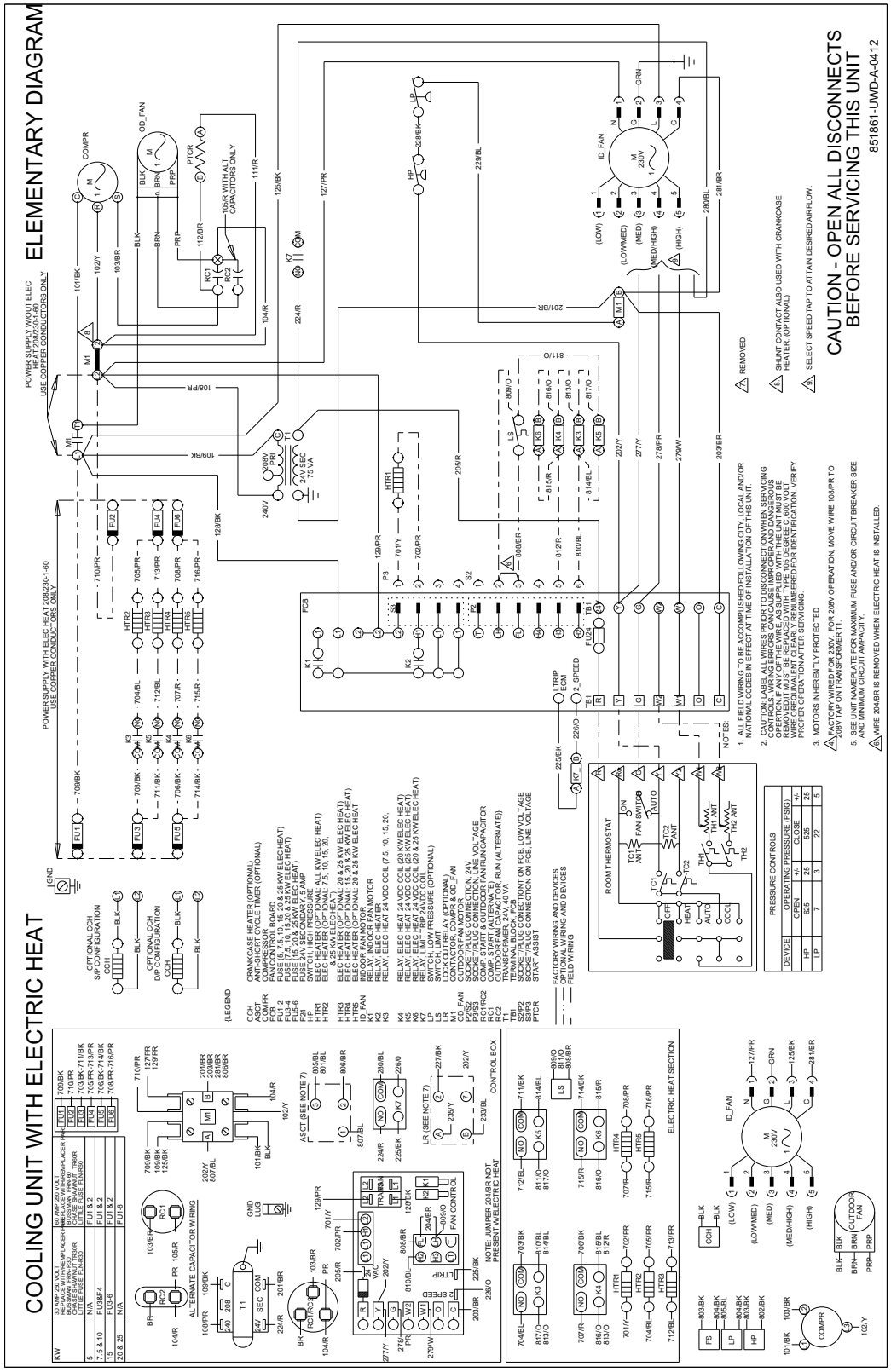

Typical DEZ060 Cooling Only 208/230-1-60 Volt Wiring Diagram

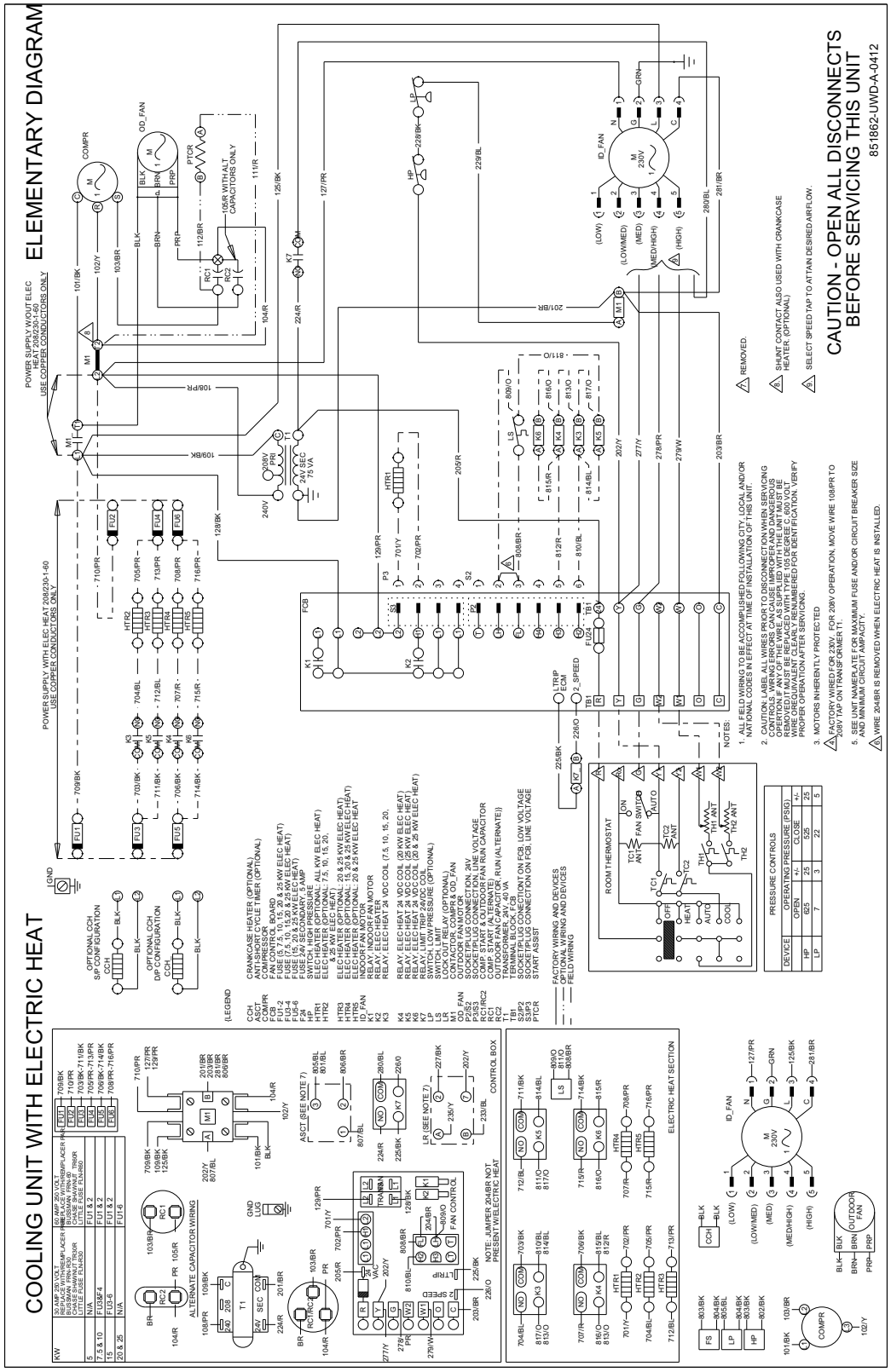

Typical DEZ036, 060 Cooling Only 208/230-3-60 volt Wiring Diagram

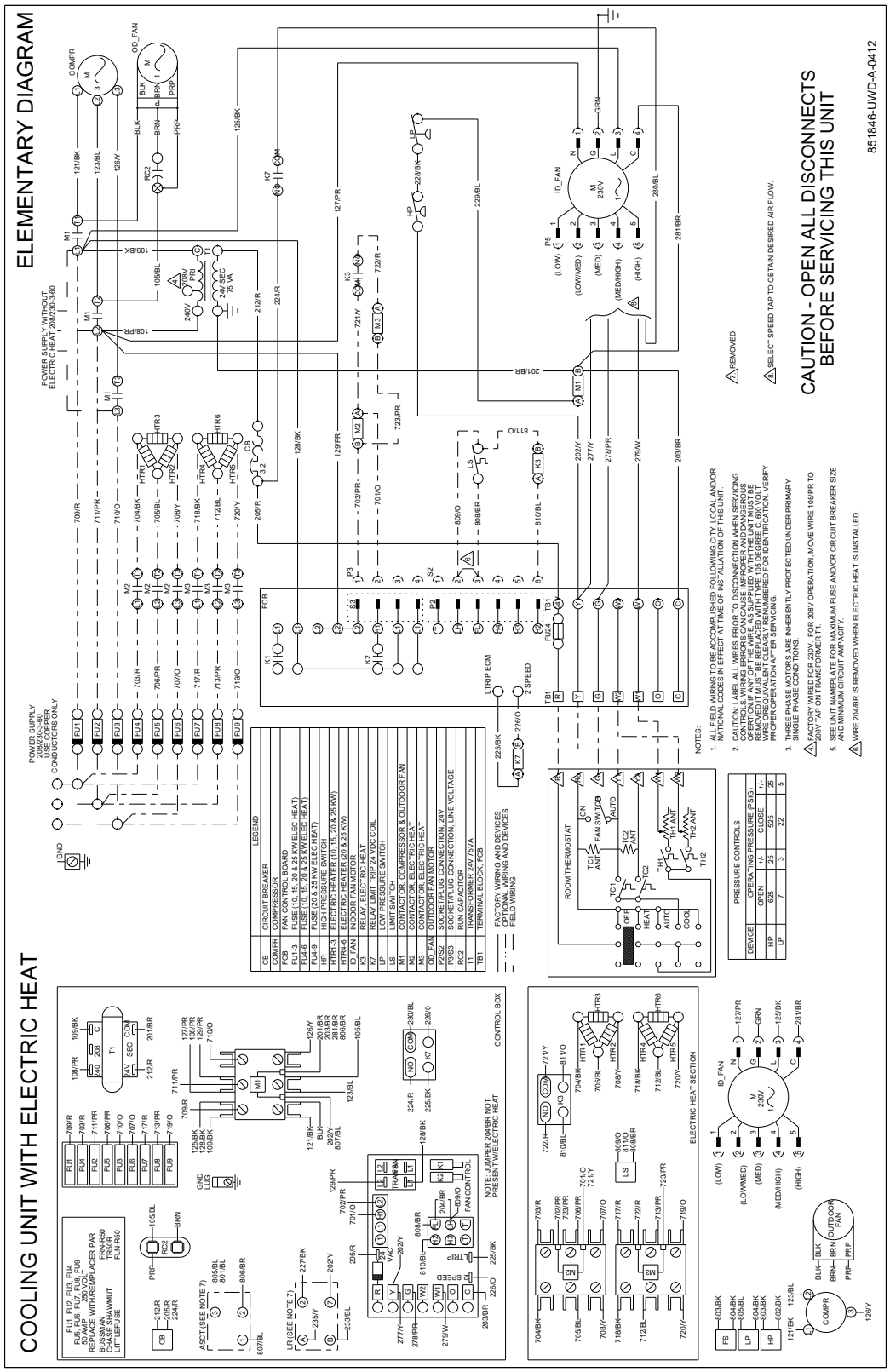

Typical DEZ036, 060 Cooling Only 460-3-60 volt Wiring Diagram

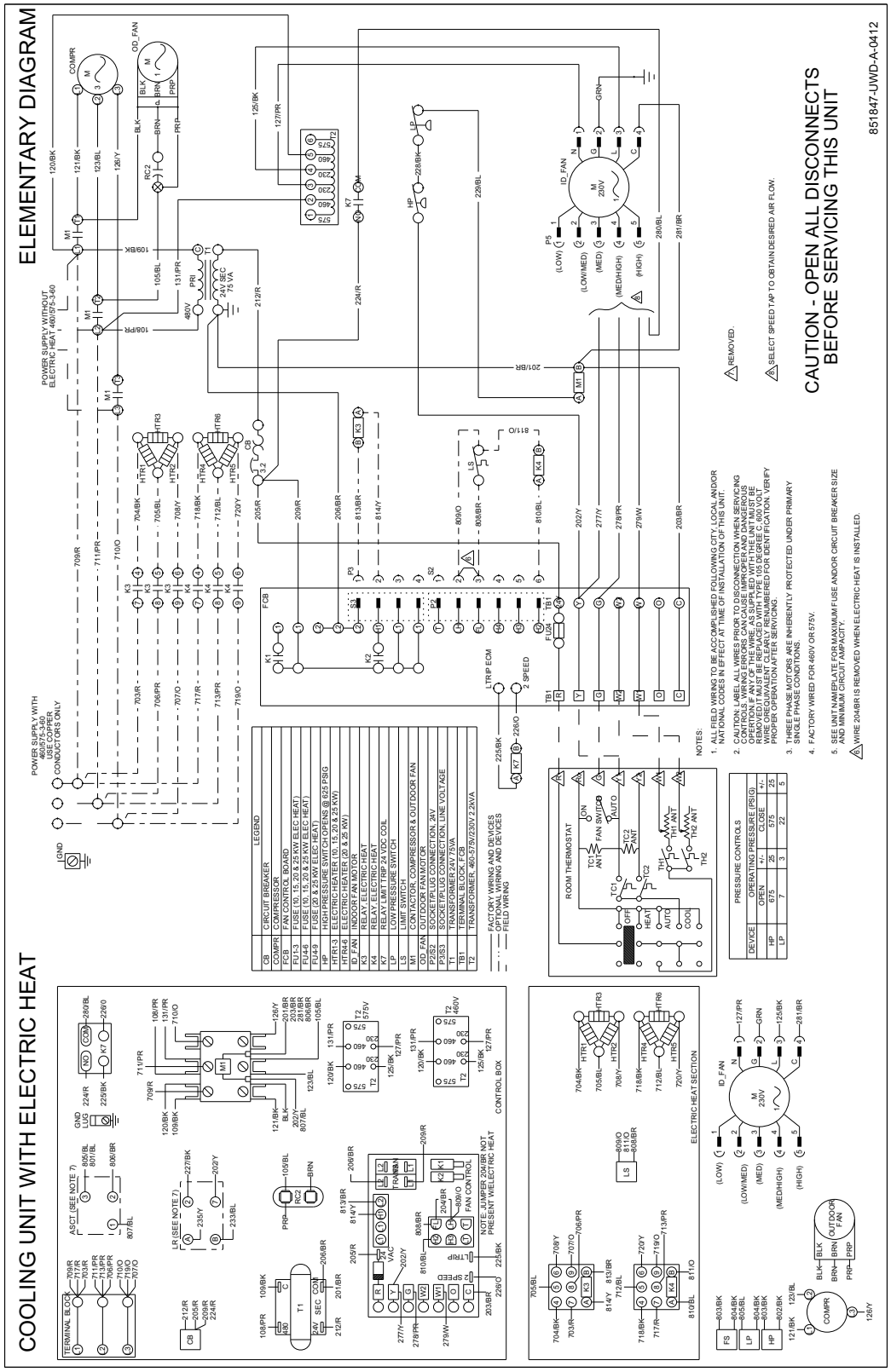

Weights and Dimensions

Unit 4 Point Load Weight

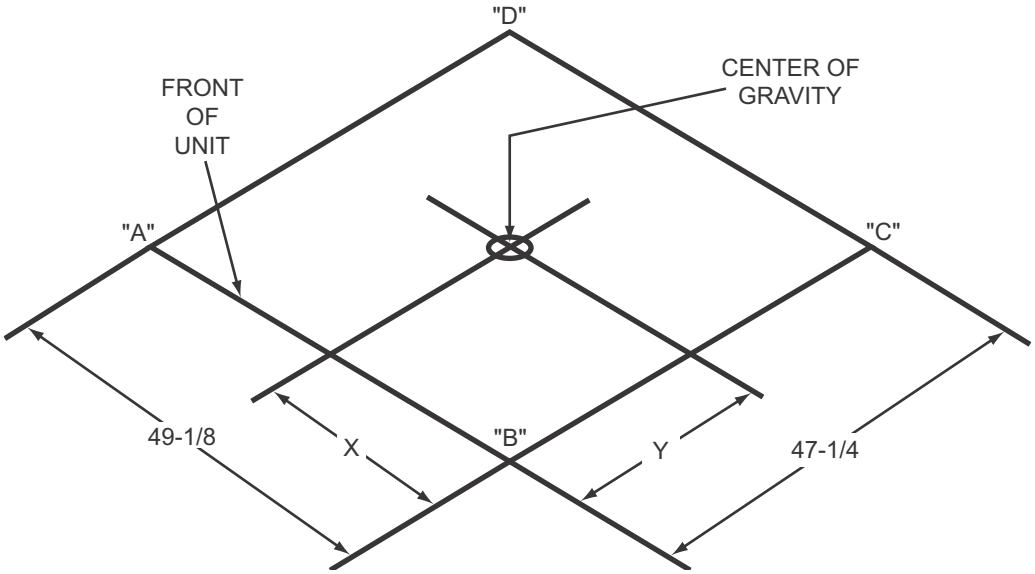

Size (Tons)	Model	Weight (lbs.)		Center of Gravity		4 Point Load Location (lbs.)			
		Shipping	Operating	X	Y	A	B	C	D
024 (2.0)	DEZ	379	374	23	23.25	92	85	95	102
030 (2.5)	DEZ	380	375	23	22.25	88	82	99	106
036 (3.0)	DEZ	384	379	23	22.25	89	83	100	107
042 (3.5)	DEZ	405	400	23	21.25	90	83	109	118
048 (4.0)	DEZ	406	401	21.5	21.75	98	80	101	123
060 (5.0)	DEZ	410	405	23.5	22.75	95	92	107	110

Unit Accessory Weights

Unit Accessory	Model	Weight (lbs.)	
		Shipping	Operating
Add Economizer	All	45	40
Add Electric Heat[1]	All	13	12

1. Weight given is for the maximum heater size available (25 kW).

Cooling Only Unit Dimensions

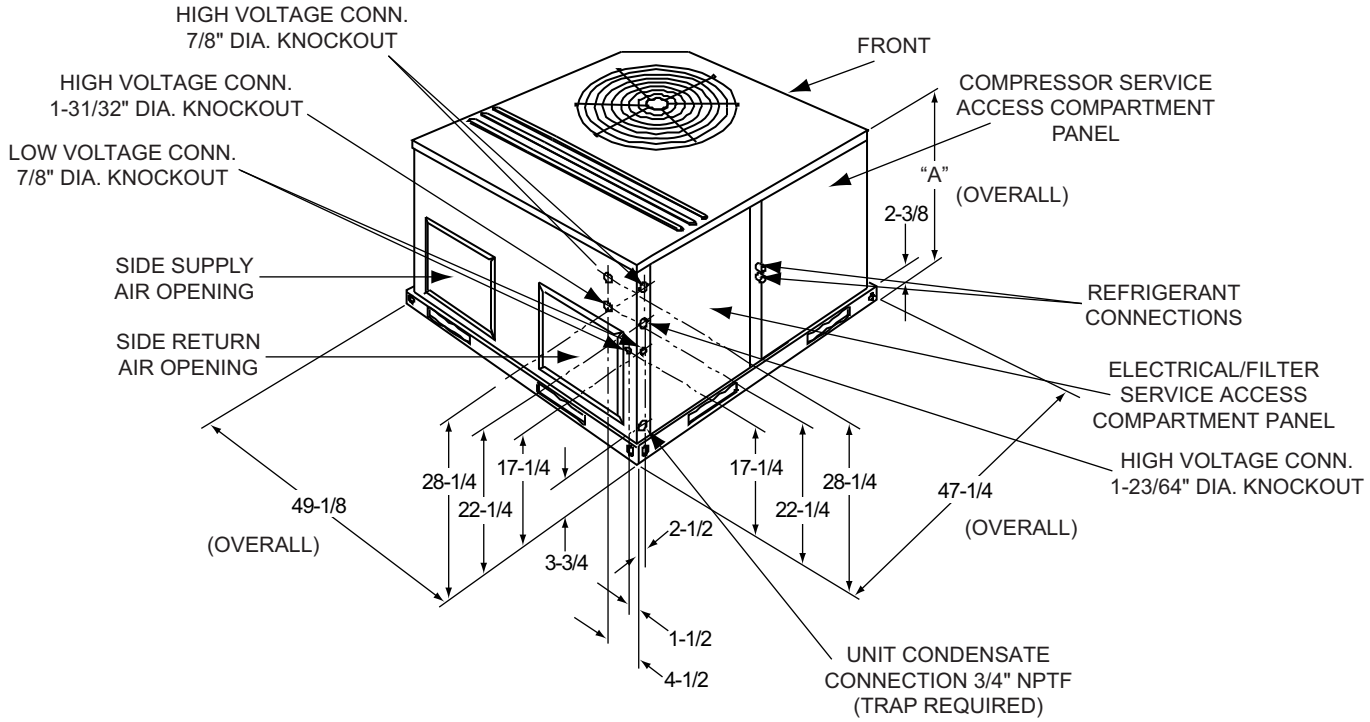

Cooling Only Unit Dimensions

Unit Size	Dimensions
	"A"
024, 030, 036, 042	33-1/2
048, 060	41-1/2

Cooling Only Unit Clearances

Direction	Distance (in.)	Direction	Distance (in.)
Top[1]	36	Right	24
Front	12	Left	24
Rear	0	Bottom[2 3]	0

1. Units must be installed outdoors. Over hanging structure or shrubs should not obscure condenser air discharge outlet.
2. Units may be installed on combustable floors made from wood or class A, B or C roof covering materials.
3. Minimum Clearance of 1inch all sides of supply air duct for the first 3 foot of duct for 20 & 25 kW., zero inches there after. For all other heaters, zero inch clearance all sides for entire length of duct.

Note: For units applied with a roof curb, the minimum clearance may be reduced from 1 inch to 1/2 inch between combustible roof curb material and this supply air duct.

Unit Dimensions Front and Bottom

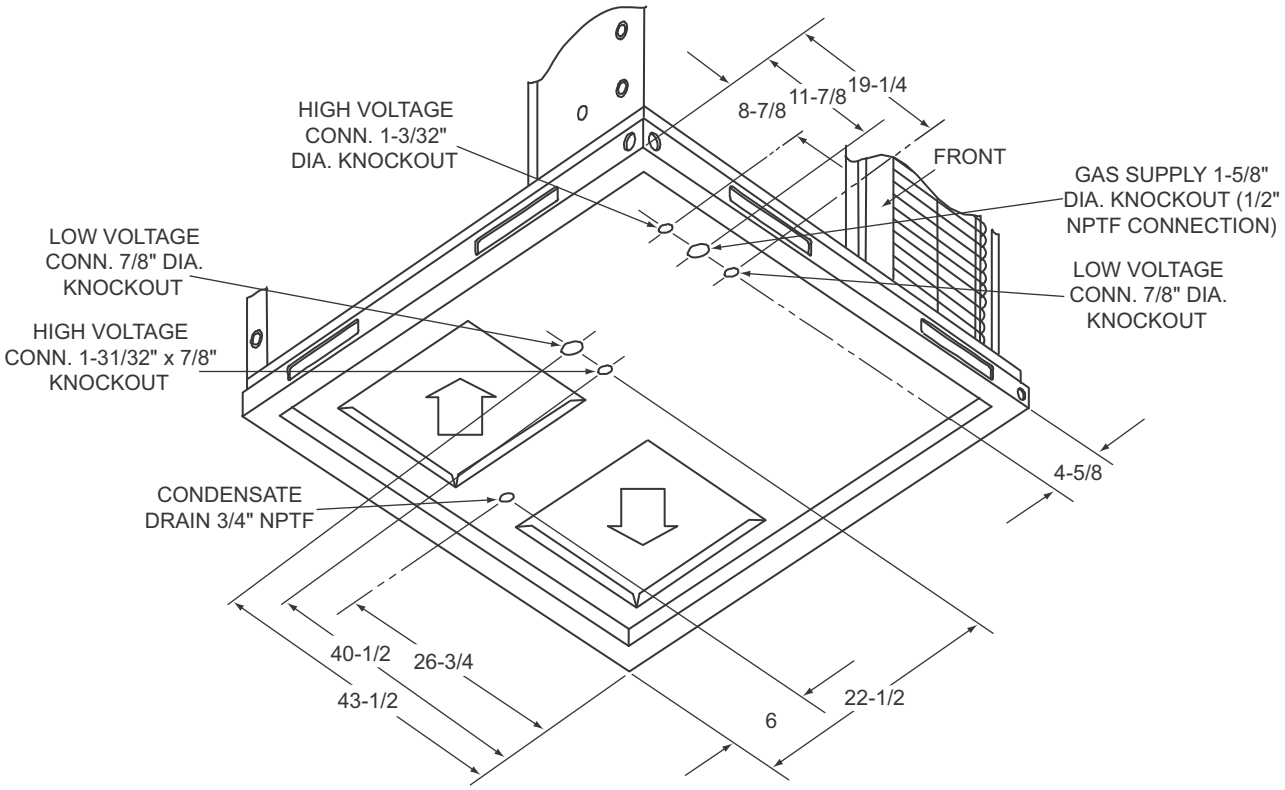

Unit Dimensions Back and Bottom

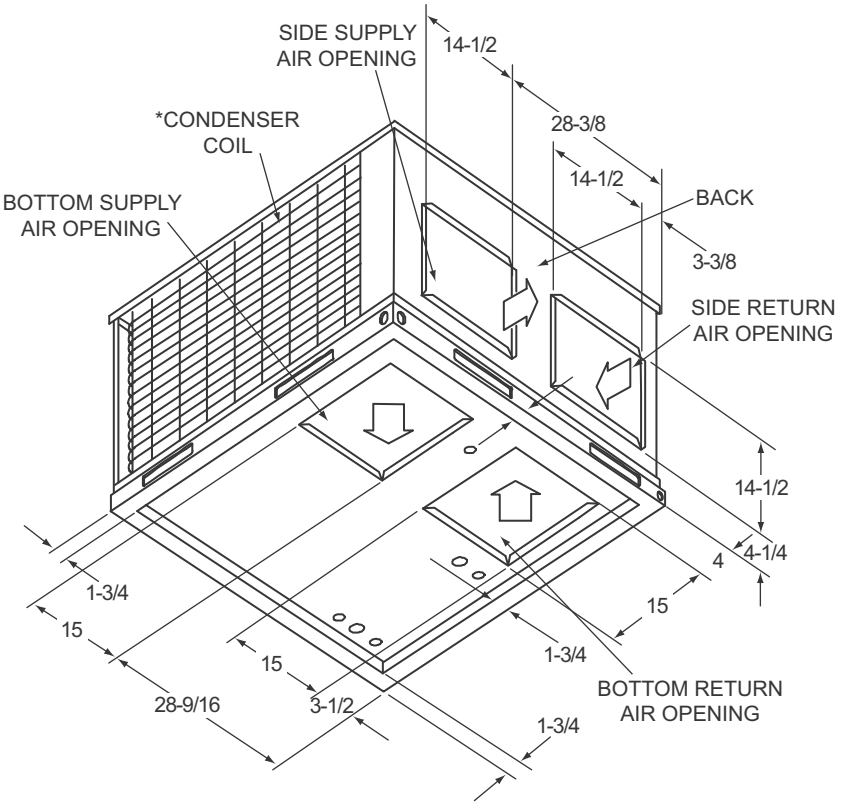

Unit Typical Duct Applications

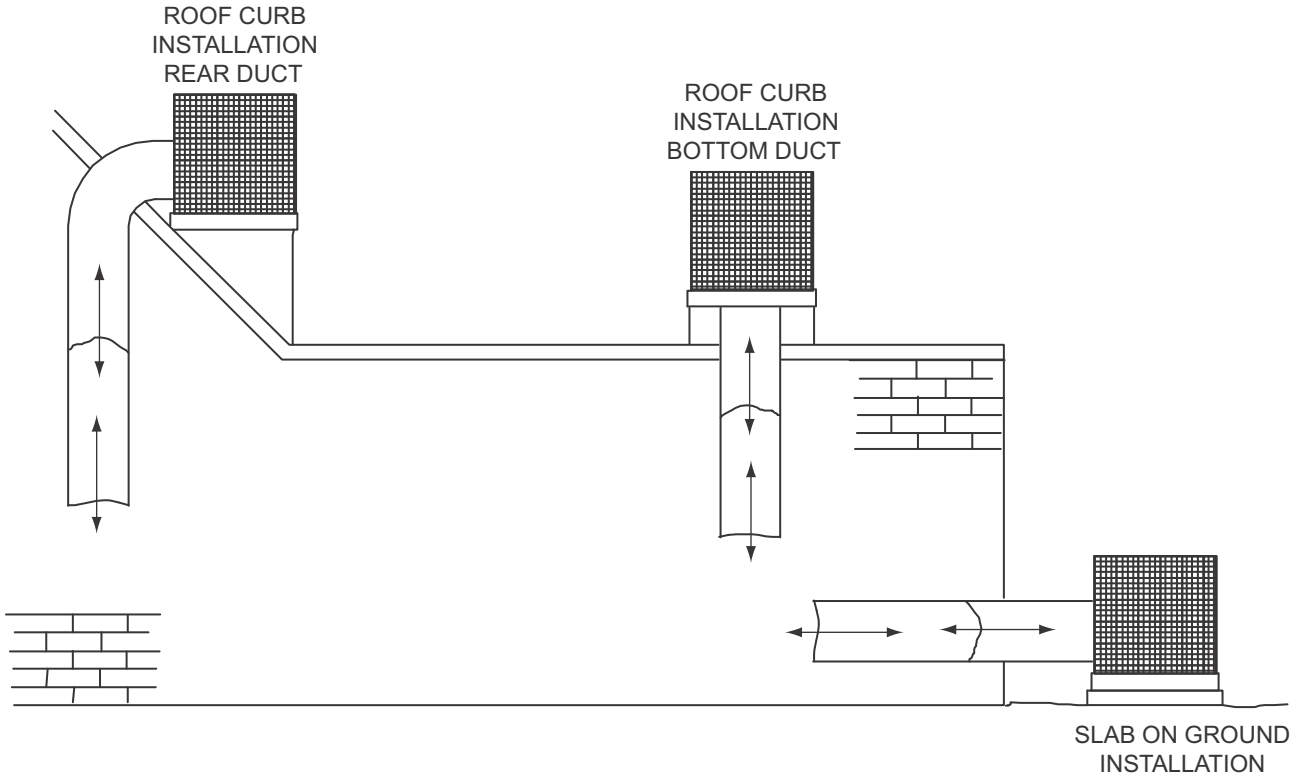

Unit Typical Slab on Ground Installation

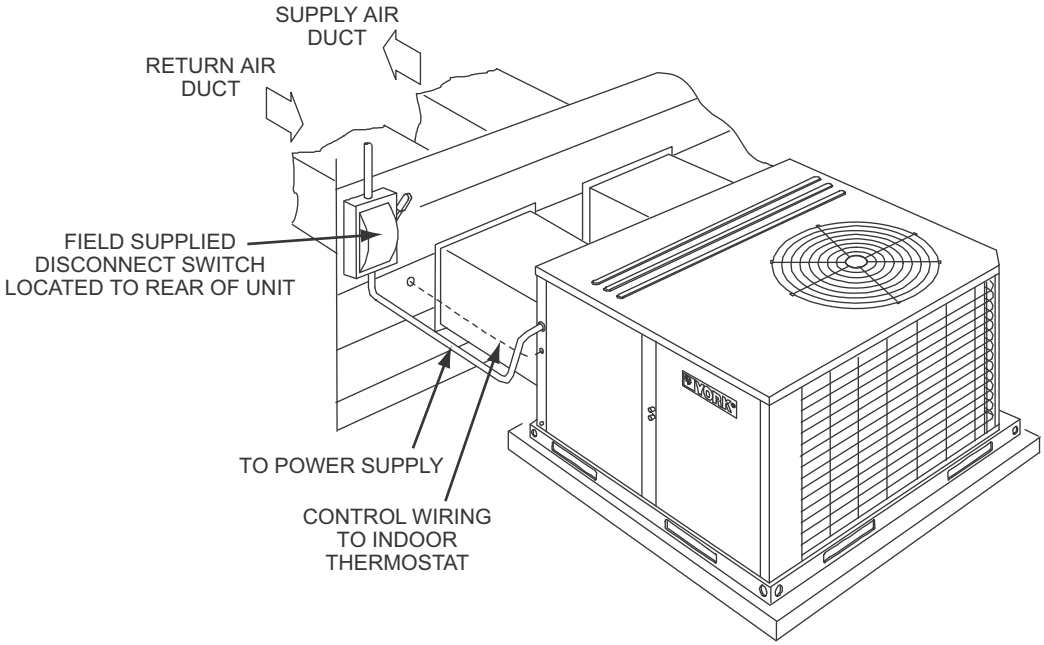

Unit Typical Roof Curb Installation

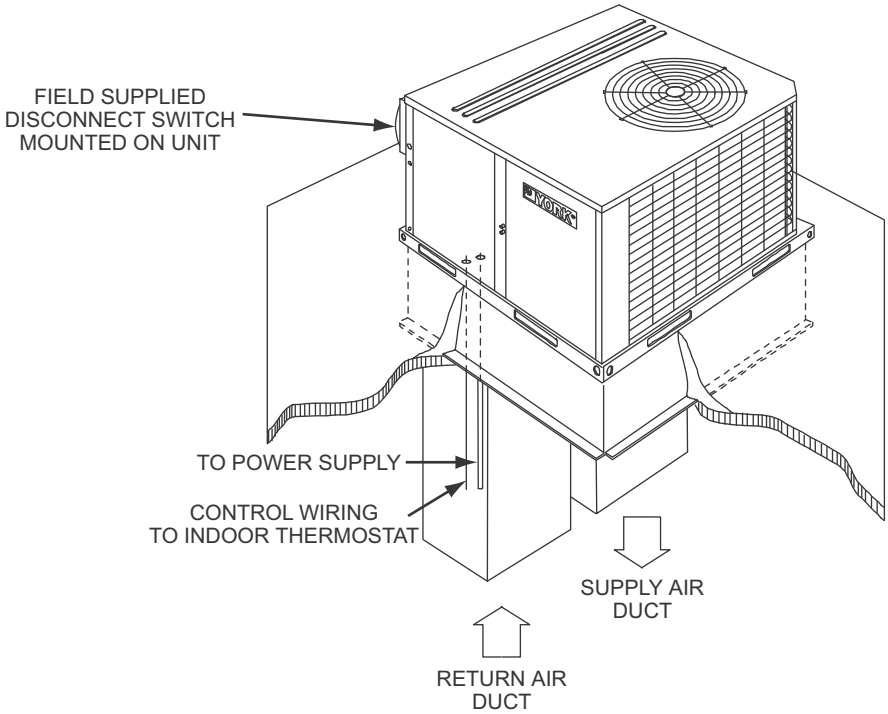

Unit Accessory Dimensions

Roof Curb[1]

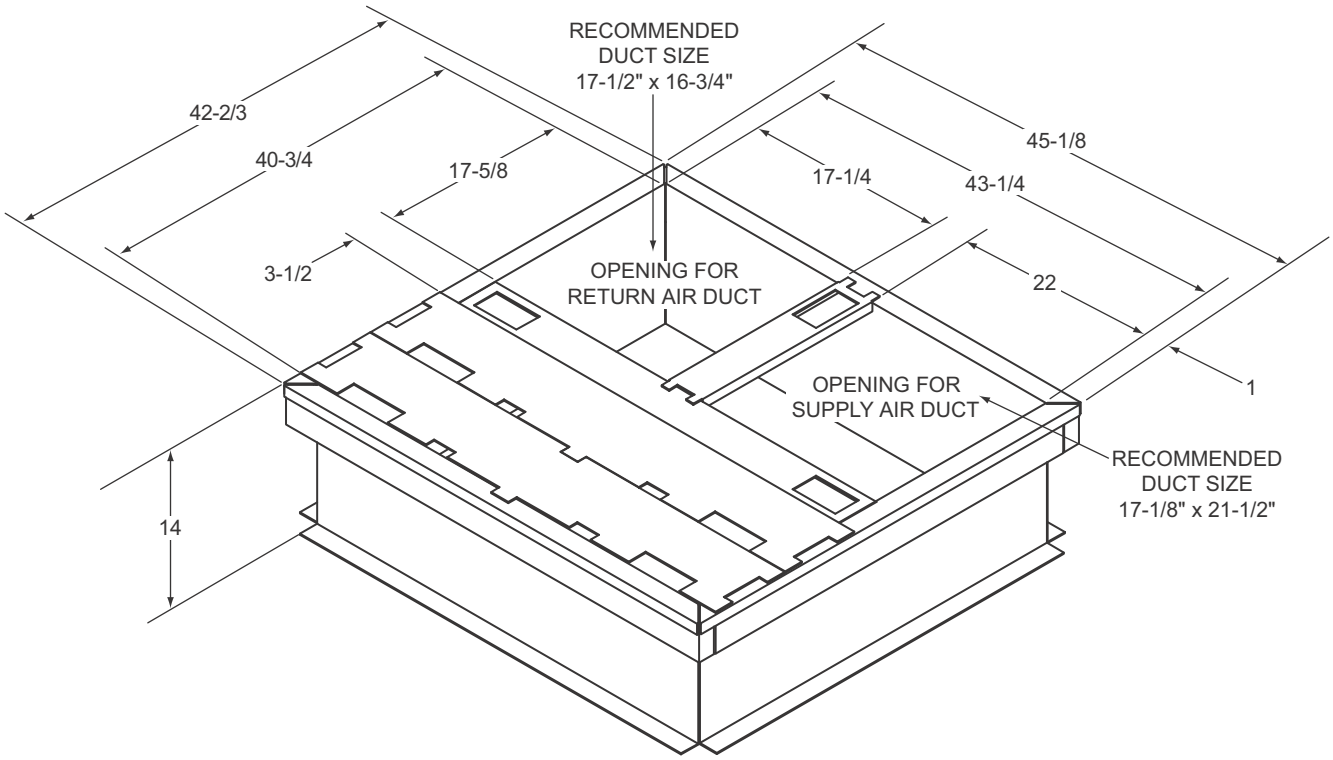

1. 8” Roof Curb also available.

Roof Curb Cross Section

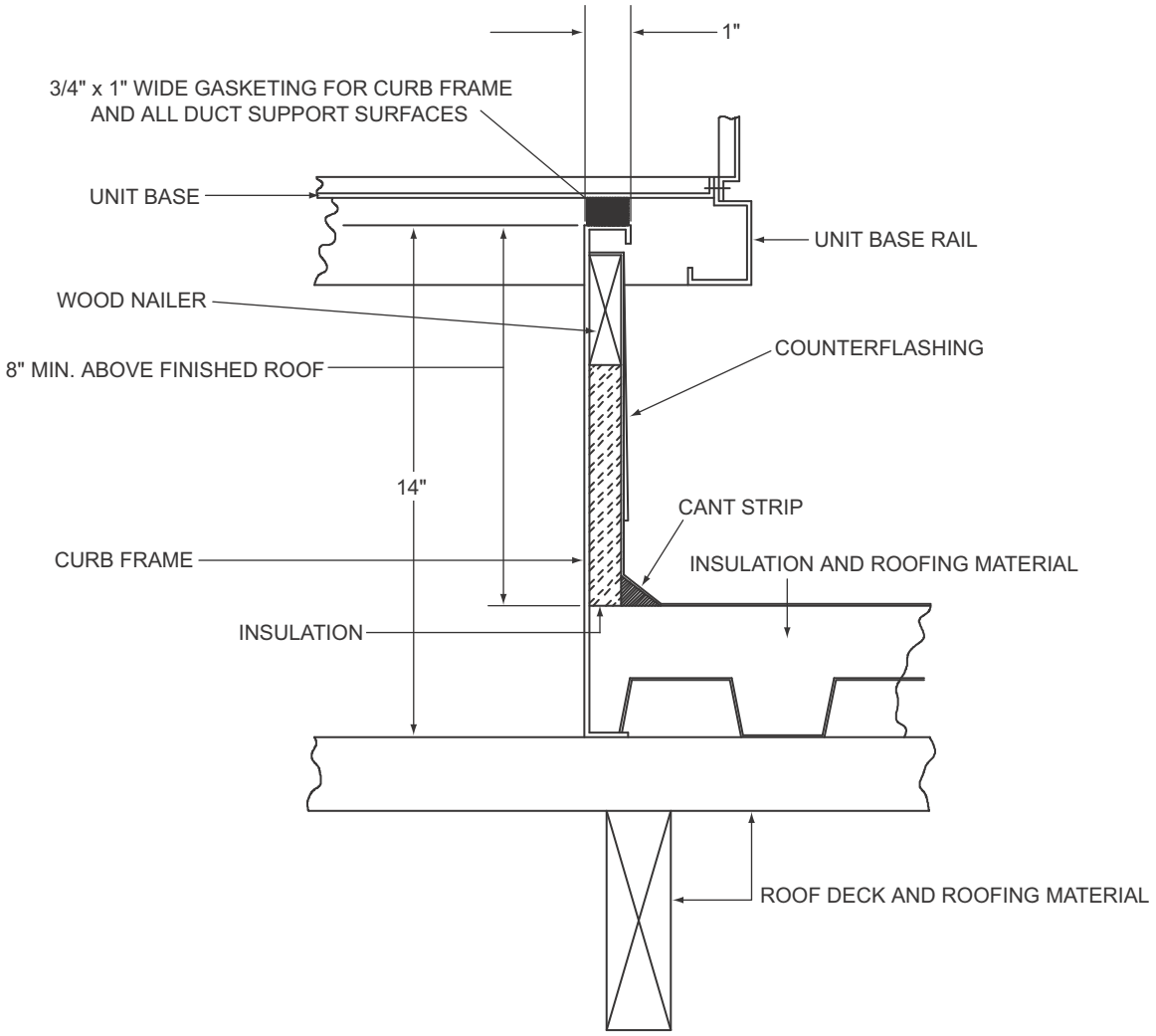

Subject to change without notice. Printed in U.S.A.
Copyright © 2012 by Johnson Controls, Inc. All rights reserved.

718432-YTG-B-0412
Supersedes: 718432-YTG-A-0811

York International Corporation
5005 York Drive
Norman, OK 73069