YORK®

Heating and Air Conditioning

# TECHNICAL GUIDE
# R-410A
# AFFINITY™ SERIES
# DEX MODELS
# 2 - 4 TON
# 60 Hertz

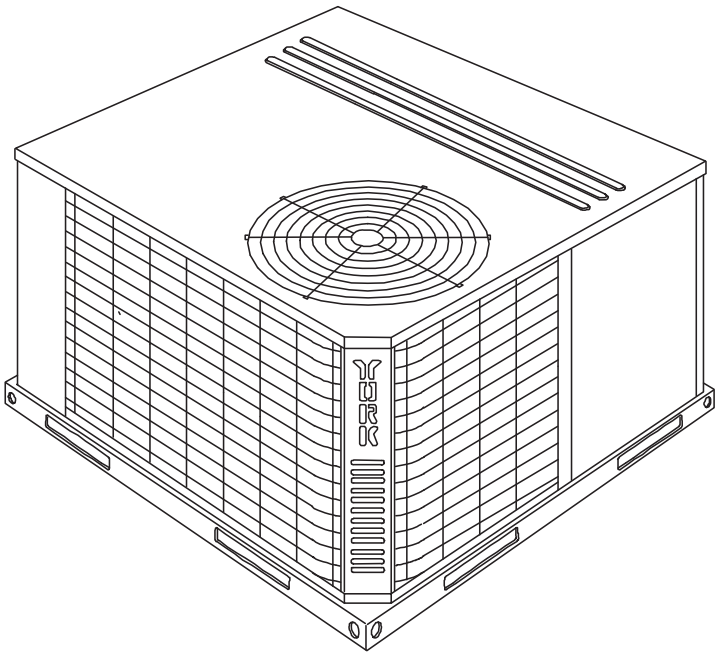


## Description

These York® Affinity™ packaged air conditioners are designed for outdoor installation. Only utility and duct connections are required at the point of installation.

Field-installed electric heater accessories are available to provide electric heat, if required.

Tested in accordance with:

DESIGN CERTIFIED

C US

EFFICIENCY RATING CERTIFIED ama

AHRI CERTIFIED™ www.ahridirectory.org Unitary Small AC AHRI Standard 210/240 Certification applies only when the complete system is listed with AHRI

CERTIFIED

FOR DISTRIBUTION USE ONLY - NOT TO BE USED AT POINT OF RETAIL SALE

## Table of Contents

**Description** . . . . . 1
**Table of Contents** . . . . . 2
**Component Location** . . . . . 2
**Nomenclature** . . . . . 3
**Features and Benefits** . . . . . 3
**Guide Specifications** . . . . . 5
**Physical Data** . . . . . 6
**Capacity Performance** . . . . . 8
**Airflow Performance** . . . . . 13
**Sound Performance** . . . . . 16
**Electrical Data** . . . . . 17
**Typical Wiring Diagrams** . . . . . 18
**Weights and Dimensions** . . . . . 21

## Component Location

### Cooling Only

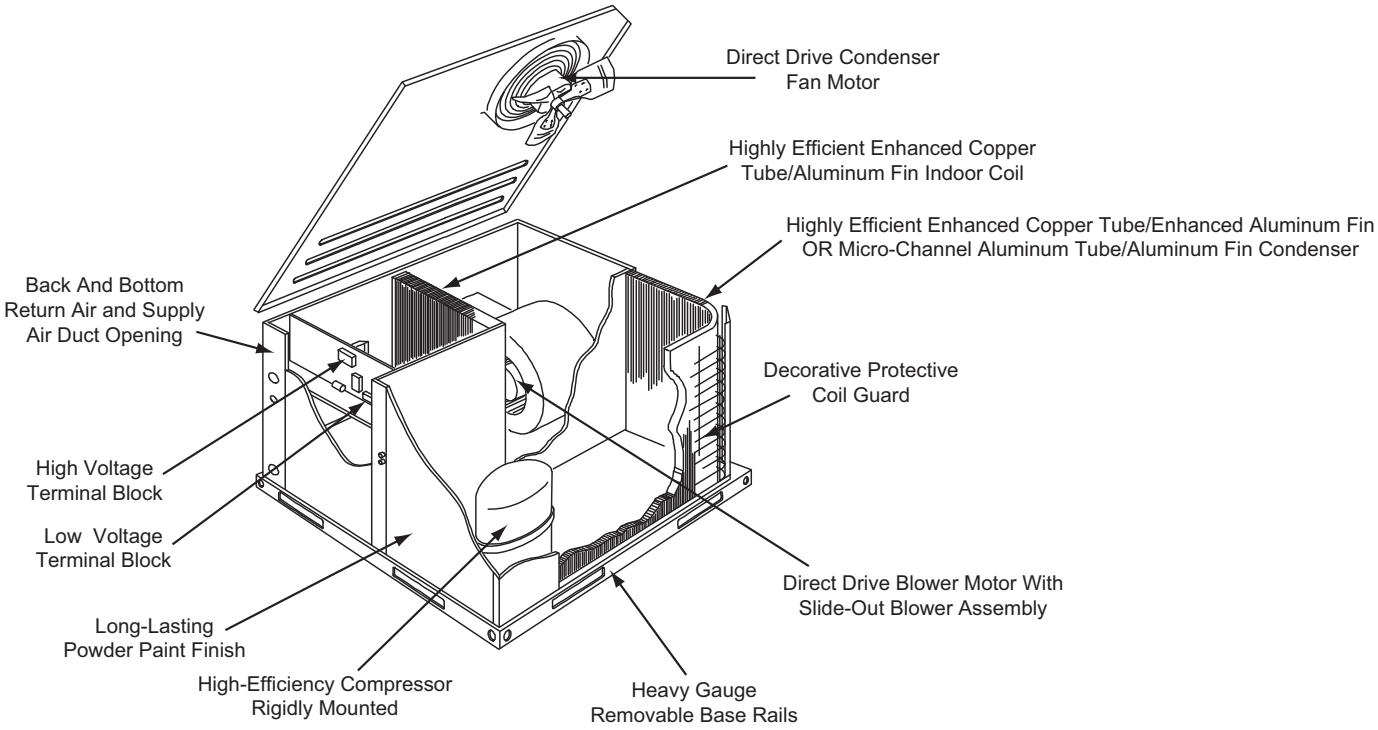

## Nomenclature

### Cooling Only

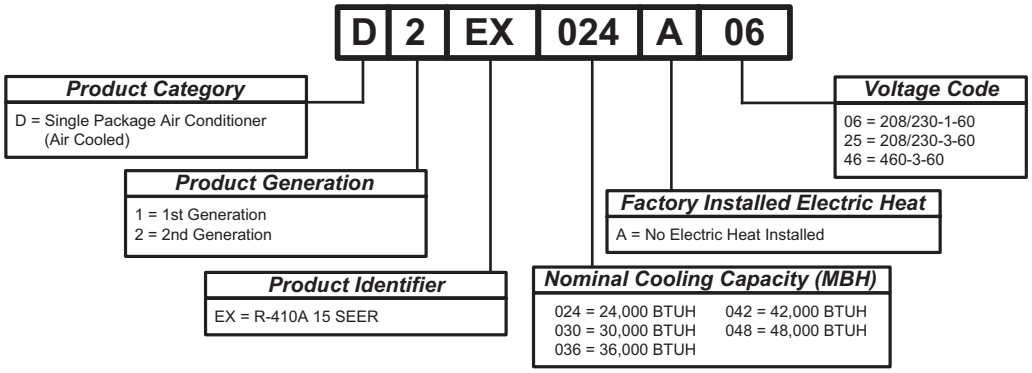


## Features and Benefits

### Standard Features

- **Operating Efficiency** - All air conditioners provide operating efficiencies of 15 SEER. All efficiencies exceed legislated minimum levels.
- **On Site Flexibility** - All model sizes share a common, compact design cabinet in a single footprint. The installer has the flexibility of setting one curb and placing the proper tonnage unit on that curb after the internal load has been determined. Field convertible duct connections from side shot to down shot allows the installer to have greater flexibility with less inventory.
- **Lower Installation Cost** - Installation time and costs are reduced by easy power and control wiring connections. The small base dimension means less space is required on the ground or roof, plus, the installer can fit this unit between the wheel wells of full size pick-up truck.

  All units are completely wired, charged with R-410A and tested prior to shipment. Unique test stations using a new state of the art computerized process system are used to insure product quality. Refrigerant charge and component part numbers are verified via computers at assembly. Vital run test statistics such as system pressure, motor currents, air velocity and temperature, unit vibration, and gas system safeties are monitored and recorded by the system to insure unit performance.

  Equal size, side supply and return duct connections allows easy hook-up of ducts to match low crawl spaces without transition pieces.
- **Utility Connections Made Easy** - Electric utility knockouts are provided through the bottom as well as the side of the unit. Utility connections can be made quickly and with a minimum amount of field labor. A field supplied and field installed electrical disconnect switch must be installed.
- **Convertible Airflow Design** - The bottom duct openings are covered when they leave the factory ready to be used for a side supply/side return application. If a bottom supply/bottom return application is desired, you simply remove the two panels from the bottom of the unit and place them in the side supply/side return duct openings. No panel cutting is required and no accessory panel is necessary. Convertible airflow design allows maximum field flexibility and minimum inventory.
- **Condensate Pan** - A non-corrosive, long-lasting, water-tight pan is positioned below the evaporator coil to collect and drain all condensate. Less collection of stagnate condensate will build-up. The condensate pan conforms to ASHRAE 62-89 standards (Ventilation for Acceptable Indoor Air Quality).
- **Condensate Drain** - The heavy duty, 3/4 inch NPTI copper connection is more durable over time. The connection is rigidly mounted to assure proper fit and leak tight seal.
- **Durable Finish** - The cabinet is made of pre-painted steel. The pre-treated galvanized steel provides a better paint to steel bond, which resists corrosion and rust creep. Special primer formulas and matted-textured finish insure less fading when exposed to sunlight.
- **Full Perimeter Base Rails** - The easily removable base rails provide a solid foundation for the entire unit and protects the unit during shipment. The rails provide fork lift access from all sides, and rigging holes are also provided so that an overhead crane can be used to place the units on a roof. On applications where the unit is placed on a pad, the base will keep the unit off the pad to deter corrosion. On applications where height is limited, the inch high base rails may be removed on location.
- **More Attractive Appearance** - A single piece Water Shed top cover containing a top discharge condenser fan arrangement requires less square footage on installation and provides a wider variety of installations. The one piece design adds greater water integrity. Rounded corners with water drip edges add to the attractive appearance. The cabinet panels have a non-fibrous insulation that will not release insulation fibers into conditioned area.
- **Top Discharge** - The top discharge condenser fan does not disrupt neighboring areas or dry-out vegetation surrounding the unit. The warm air from the top mounted fan is blown up away from the structure and any landscaping. This allows compact location on multi-unit applications.
- **Condenser Coil Grille** - All models utilize a stamped “Louvered” design which provides superior impact protection against smaller objects during transit and after installation.
- **Low Operating Sound Level** - The upward air flow carries the normal operating noise up and away from the living area. The rigid top panel effectively isolates any motor sound. Isolator mounted compressor and the

rippled fins of the condenser coil muffle the normal fan motor and compressor operating sounds. The unique formed base pan also aids in sound alterations with it's Super-Structure design. This design strategically places embossments in the pan for optimum strength and rigidity.

- **Fan System** - All models operate over a wide range of design conditions with an electrically commutated fan motor. These units easily match all types of applications and provide greater on site flexibility to match comfort requirement. The cooling speed is factory set and can be field adjusted to a second speed. The heating speed is factory set but can be field adjusted. This allows maximum comfort conditions.
- **Simple Control Circuit** - A low voltage printed circuit board contains a diagnostic indicator light and a low voltage terminal strip. An additional set of pin connectors is also provided to simplify the field interface of external controls. Mate-n-lock plug connectors are used. The electrical control box is not located in the compressor compartment. The controls are mounted on a Control-Tilt control panel to allow the access cover to be removed for trouble shooting and maintenance without affecting the normal system operating pressures. All wiring internal to the unit is color/number coded.
- **Protected Compressor** - The compressor is internally protected against high pressure and temperature. This is accomplished by the simultaneous operation of high pressure relief valve and a temperature sensor which protect the compressor if undesirable operating conditions occur.
- **Pressure Switches** - High pressure and low pressure/ loss of charge switches standard in all units. When abnormal conditions are sensed through the pressure switches, the unit will lock out preventing any further operation until reset or problem is corrected.
- **Exclusive Coil Design** - Grooved copper tubes and enhanced aluminum fin construction improves heat transfer for maximum efficiency and durability.
- **Self Diagnostic Fan Control Module** - Due to this self diagnostic control, less on site time is required to trouble shoot these units.
- **Low Maintenance** - Long life, permanently lubricated condenser and evaporator fan motor bearings need no annual maintenance adding greater reliability to the unit. Blower assembly can be easily cleaned by the unique Slip- Track slide-out blower assembly.
- **Secured Service Access Ports** - Protected, externally mounted, re-usable service access ports are provided on both the high and low lines for ease of evacuating and charging the system. No final field mounting required.
- **Easy Service Access** - A large, single panel covers the electrical controls to make servicing easy. The blower compartment has an additional large panel with a built-in handle tab. Removing this panel will allow the blower assembly to slide-out for easy removal for maintenance and ease of trouble shooting.
- **Replacement Parts** - The installer requires no special training to replace any of the components of these units and does not need to maintain an inventory of unique parts.
- **System Integration** - Each unit has the internal ability to integrate an electronic air cleaner or humidifier to work in conjunction with the base unit.

## Field Installed Accessories

- **Economizer Down Discharge/Supply Kit** - Modulating integrated economizer provides simultaneous operation between the mechanical cooling and economizer operation. Independent blade design insures proper control and less than 1% leak rate. Includes hood and mesh bird screen filter integrated into the hood, dry bulb sensor and relief damper. Separate field accessories of single enthalpy and dual enthalpy are also available. A built-in barometric relief of 25% is provided.
- **Single Enthalpy Sensor** - Sensor replaces dry bulb sensor standard in economizer kit. Provides improved economizer operation by sensing the dry bulb temperature from outdoors plus the enthalpy content of the outdoor air.
- **Dual Enthalpy Sensor** - Additional sensor to single enthalpy sensor. Sensor senses both the return air temperature dry bulb and humidity in conjunction with the single enthalpy to determine the most economical mix. Single Enthalpy sensor also required.
- **Hail Guard Kit** - Kit contains protective grilles made of expanded aluminum with full perimeter frame. Sloped hoods are also included to assure maximum protection.
- **Filter/Frame Kit (Single Phase Only)** - Kit contains the necessary hardware to field install return air filters into the base unit. Pre-cut filter racks and appropriate cleanable standard size filters are shipped in one kit. The filter rack is suitable for either 1" or 2" filters. (1" filter is supplied) This kit is available for single phase horizontal or vertical duct application only. Standard in all 3 Phase models.
- **Motorized Fresh Air Damper** - Designed for duct mounted side supply/return and unit mounted down supply/return applications. Damper capable of providing 0% through 50% of outdoor air (field supplied). Closes on power loss, includes hood and screen assembly.
- **Rectangle To Round Adapters** - Kit includes one supply and one return air rectangle to round duct adapter. Adapters are preformed and designed to fit over current duct openings on the base unit. Transition is from side square duct opening to 14" round duct opening.
- **Roof Curbs** - NRCA approved curbs provide proper fit to base unit for rooftop installations. Curbs are designed to be assembled through hinge pins in each corner. Kit also provides seal strip to assure a water tight seal. 8 and 14 inch high roof curbs are available.
- **Manual Outdoor Damper** - Provides 0% through 50% outdoor air capability (field adjustable). Designed for duct mounted side supply/return applications. Includes hood and screen assembly.
- **Wall Thermostat** - The units are designed to operate with 24-volt electronic and electro-mechanical thermostats. All units can operate with single stage heat/single stage cool thermostats - with or without the economizer.
- **Low Ambient Kit** - Kit provides necessary hardware to convert unit to operate in cooling cycle down to 0º F. Standard unit operation 45º F.
- **Transformer Kit** - Kit provides necessary hardware to provide single phase models from factory furnished 40 VA transformer capability to 75 VA transformer capability. (Required on installations with economizer or motorized damper.)

## Guide Specifications

### General

Units shall be manufactured by Johnson Controls Unitary Products in an ISO 9001 certified facility. YORK's Affinity™ package units give you the flexibility and choices you need in today's market. These packaged air conditioners are designed for outdoor installation. Only utility and duct connections are required at the point of installation.

### Description

Units shall be factory-assembled, single packaged, Electric Cooling units, designed for outdoor mounted installation. For SEER ratings, refer to technical literature. They shall have built in, equal size, field convertible duct connections for down discharge supply/return or horizontal discharge supply/return. The units shall be factory wired, piped, charged with R-410A Refrigerant and factory tested prior to shipment. All unit wiring shall be both numbered and color coded. All units shall be manufactured in a facility certified to ISO 9001 standards, and the cooling performance shall be rated in accordance with DOE and AHRI test procedures. Units shall be CSA listed and classified to ANSI Z21.47/CAN/CSA 2.3 standards and UL 1995/CAN/CSA No. 236-M90 conditions.

### Unit Cabinet

Unit cabinet shall be constructed of G-90, pre-paint textured steel, certified at 500 hours salt spray test per ASTM-B117 standards. The unit top shall be a single piece "Water Shed" design, with drip edges and no-seam corners to provide optimum water integrity. Unit shall have a rigidly mounted condenser coil guard to provide protection from objects and personnel after installation. Indoor blower section shall be insulated with up to 3/4" thick, aluminum, foil faced insulation, fastened to prevent insulation from entering the air stream. Cabinet panels shall be "large" size, easily removable for servicing and maintenance, with built-in lift handles. Unit shall be built on a formed, "Super-Structure" design base pan, with embossments at critical points to add strength, rigidity and aid in minimizing sound. Full perimeter base rails shall be provided to assure reliable transit of equipment, overhead rigging, for truck access and proper sealing on roof curb applications. Base rails shall be removable, when required, to lower unit height. Filters shall be furnished and be accessible through a removable access door, sealed airtight. Units vertical discharge and return duct configuration shall be designed to fit between standard 24" O.C. beams without modification to building structure, duct work and base unit. Condensate pan shall be internally sloped and conform to ASHRAE 62-89 self-draining standards, with 3/4" NPTI copper, ridged mount connection.

### Indoor (Evaporator) Fan Assembly

Fan shall be direct drive design. Fan wheel shall be double-inlet type with forward-curved blades, dynamically balanced to operate smoothly throughout the entire range of operation. Airflow design shall be constant air volume. Bearings shall be sealed and permanently lubricated for longer life and no maintenance. Fan assembly shall be "Slip Track" (slide-out) design for easy removal and cleaning.

### Outdoor (Condenser) Fan Assembly

The outdoor fan shall be of the direct-driven propeller type, discharge air vertically, have aluminum blades riveted to corrosion resistant steel spider bracket and shall be statically balanced for smooth operation. The outdoor fan motor shall be totally enclosed with permanently lubricated bearings and internally protected against overload conditions.

### Refrigerant Components

Compressors:

a. Shall be fully hermetic type, direct drive, internally protected with internal high-pressure relief and over temperature protection. The hermetic motor shall be suction gas cooled and have a voltage range of +/- 10% of the unit nameplate voltage.

b. Shall have internal isolation and sound muffling to minimize vibration and noise, and be externally isolated on a dedicated, independent mounting.

Coils:

a. Evaporator coils shall have aluminum plate fins mechanically bonded to seamless internally enhanced copper tubes with all joints brazed.

b. Evaporator coil shall be of the direct expansion, draw through design.

c. Condenser coils shall have aluminum plate fins mechanically bonded to seamless internally enhanced copper tubes with all joints brazed or Mircro-Channel aluminum tube, aluminum fins.

d. Condenser coil shall be draw through design.

Refrigerant Circuit and Refrigerant Safety Components shall include:

a. Independent fixed orifice expansion devices.

b. Filter/strainer to eliminate any foreign matter.

### Electric Heating Section (Field Install Accessory)

An electric heating section, with nickel chromium elements, shall be provided in a range of 5 thru 25 KW. The heating section shall have a primary limit control(s) (automatic reset) to prevent the heating element system from operating at an excessive temperature. The Heating Section assembly shall slide out of the unit for easy maintenance and service. Units with Electric Heating Sections shall be wired for a single point power supply with branch circuit fusing (where required).

# Physical Data

## DEX024-048 Physical Data

| Component | Models | | | | |
|---|---|---|---|---|---|
| | DEX024 | DEX030 | DEX036 | DEX042 | DEX048 |
| **Nominal Tonnage** | **2.0** | **2.5** | **3.0** | **3.5** | **4.0** |
| **AHRI COOLING PERFORMANCE** | | | | | |
| Gross Capacity @ AHRI A point (Btu) | 23.5 | 29.2 | 36.8 | 44.5 | 50.8 |
| AHRI net capacity (Btu) | 23.2 | 28.6 | 36.0 | 43.5 | 49.0 |
| EER | 12.35 | 12.25 | 12.3 | 12.3 | 12.3 |
| SEER | 15.1 | 15.2 | 15.2 | 15.4 | 15.2 |
| Nominal CFM | 800 | 1000 | 1150 | 1400 | 1600 |
| System power (KW) | 1.9 | 2.3 | 2.9 | 3.5 | 4.0 |
| Refrigerant type | R-410a | R-410a | R-410a | R-410a | R-410a |
| Refrigerant charge (lb-oz) | 5-0 | 8-0 | 8-0 | 7-8 | 10-0 |
| **DIMENSIONS (inches)** | | | | | |
| Length | 49 1/8 | 49 1/8 | 49 1/8 | 49 1/8 | 49 1/8 |
| Width | 47 1/4 | 47 1/4 | 47 1/4 | 47 1/4 | 47 1/4 |
| Height | 33 1/2 | 33 1/2 | 33 1/2 | 41 1/2 | 41 1/2 |
| **OPERATING WT. (lbs.)** | 355 | 390 | 400 | 410 | 440 |
| **COMPRESSORS** | | | | | |
| Type | Scroll 2-spd | Scroll 2-spd | Scroll 2-spd | Scroll 2-spd | Scroll 2-spd |
| Quantity | 1 | 1 | 1 | 1 | 1 |
| **CONDENSER COIL DATA** | | | | | |
| Face area (Sq. Ft.) | 11.7 | 11.7 | 11.7 | 16.4 | 16.4 |
| Rows | 1 | 2 | 2 | 1 | 2 |
| Fins per inch | 20 | 20 | 20 | 20 | 20 |
| Tube diameter (in.) | 3/8 | 3/8 | 3/8 | 3/8 | 3/8 |
| Circuitry Type | Interlaced | Interlaced | Interlaced | Interlaced | Interlaced |
| **EVAPORATOR COIL DATA** | | | | | |
| Face area (Sq. Ft.) | 4.38 | 4.38 | 4.38 | 5.63 | 5.63 |
| Rows | 2 | 2 | 3 | 3 | 3 |
| Fins per inch | 15 | 15 | 15 | 16 | 16 |
| Tube diameter | 3/8 | 3/8 | 3/8 | 3/8 | 3/8 |
| Circuitry Type | Interlaced | Interlaced | Interlaced | Interlaced | Interlaced |
| Refrigerant control | TX Valve | TX Valve | TX Valve | TX Valve | TX Valve |
| **CONDENSER FAN DATA** | | | | | |
| Fan diameter (Inch) | 22 | 22 | 22 | 22 | 22 |
| Type | Prop. | Prop. | Prop. | Prop. | Prop. |
| Drive type | Direct | Direct | Direct | Direct | Direct |
| No. speeds | 1 | 1 | 1 | 1 | 1 |
| Number of motors | 1 | 1 | 1 | 1 | 1 |
| Motor HP each | 1/4 | 1/4 | 1/4 | 1/4 | 1/3 |
| RPM | 850 | 850 | 850 | 1100 | 1100 |
| Nominal total CFM | 1800 | 1800 | 2400 | 3000 | 3000 |
| **DIRECT DRIVE EVAP FAN DATA** | | | | | |
| Quantity | 1 | 1 | 1 | 1 | 1 |
| Fan Size (Inch) | 10 x 8 | 10 x 8 | 10 x 8 | 11 x 10 | 11 x 10 |
| Type | Centrifugal | Centrifugal | Centrifugal | Centrifugal | Centrifugal |
| No. speeds | 2 | 2 | 2 | 2 | 2 |
| Motor HP each | 1/2 | 1/2 | 1/2 | 3/4 | 3/4 |
| RPM | Variable | Variable | Variable | Variable | Variable |
| Frame size | 48 | 48 | 48 | 48 | 48 |
| **FILTERS** | | | | | |
| Quantity - Size | 2 - 22 x 14 x 1 | 2 - 22 x 14 x 1 | 2 - 22 x 14 x 1 | 2 - 22 x 14 x 1 | 2 - 22 x 14 x 1 |

### Unit Limitations

| Size (Tons) | Model | Unit Voltage | Unit Limitations | | |
|---|---|---|---|---|---|
| | | | Applied Voltage | | Outdoor DB Temp |
| | | | Min | Max | Max (°F) |
| 024 (2.0) | DEX | 208/230-1-60 | 187 | 252 | 115 |
| 030 (2.5) | DEX | 208/230-1-60 | 187 | 252 | 115 |
| 036 (3.0) | DEX | 208/230-1-60 | 187 | 252 | 115 |
| | | 208/230-3-60 | 187 | 252 | 115 |
| | | 460-3-60 | 432 | 504 | 115 |
| 042 (3.5) | DEX | 208/230-1-60 | 187 | 252 | 115 |
| 048 (4.0) | DEX | 208/230-1-60 | 187 | 252 | 115 |
| | | 208/230-3-60 | 187 | 252 | 115 |
| | | 460-3-60 | 432 | 504 | 115 |

# Capacity Performance

## DEX024-048 Cooling Capacities

### DEX024 (2.0 Ton)

| Air on Evaporator Coil | | Temperature of Air on Condenser Coil | | | | | | | | | | | | | | | |
|---|---|---|---|---|---|---|---|---|---|---|---|---|---|---|---|---|---|
| | | Net Capacity[1] (MBh) | Total Input (kW)[2] | Sensible Capacity (MBh) Return Dry Bulb (°F) | | | | | | Net Capacity[1] (MBh) | Total Input (kW)[2] | Sensible Capacity (MBh) Return Dry Bulb (°F) | | | | | |
| CFM | WB (°F) | | | 90 | 85 | 80 | 75 | 70 | 65 | | | 90 | 85 | 80 | 75 | 70 | 65 |
| | | **75°F** | | | | | | | | **85°F** | | | | | | | |
| 600 | 77 | 21.5 | 1.1 | 7.5 | 7.8 | 6.8 | - | - | - | 21.6 | 1.3 | 9.8 | 8.3 | 6.9 | - | - | - |
| | 72 | 21.3 | 1.1 | 14.3 | 12.7 | 11.0 | 9.3 | - | - | 20.7 | 1.3 | 14.8 | 12.8 | 10.8 | 8.9 | - | - |
| | 67 | 21.2 | 1.1 | 21.2 | 17.6 | 15.2 | 12.9 | 10.6 | - | 19.7 | 1.3 | 19.7 | 17.3 | 14.8 | 12.2 | 9.7 | - |
| | 62 | 20.2 | 1.1 | 20.2 | 20.2 | 19.9 | 15.6 | 11.4 | 7.1 | 18.4 | 1.3 | 18.4 | 18.4 | 18.3 | 14.0 | 9.8 | 5.5 |
| | 57 | 19.4 | 1.1 | 19.4 | 19.4 | 19.4 | 15.1 | 10.9 | 6.6 | 18.2 | 1.3 | 18.2 | 18.2 | 18.2 | 13.9 | 9.6 | 5.3 |
| 800 | 77 | 30.1 | 1.6 | 13.1 | 12.3 | 10.2 | - | - | - | 28.9 | 1.8 | 13.9 | 11.7 | 9.6 | - | - | - |
| | 72 | 28.4 | 1.6 | 19.9 | 17.3 | 14.8 | 12.2 | - | - | 26.9 | 1.8 | 19.4 | 16.8 | 14.1 | 11.4 | - | - |
| | 67 | 26.7 | 1.5 | 26.7 | 22.4 | 19.3 | 16.2 | 13.1 | - | 24.9 | 1.7 | 24.9 | 21.8 | 18.6 | 15.4 | 12.2 | - |
| | 62 | 24.0 | 1.5 | 24.0 | 24.0 | 24.0 | 20.6 | 17.1 | 13.7 | 22.7 | 1.7 | 22.7 | 22.7 | 22.7 | 19.2 | 15.7 | 12.3 |
| | 57 | 24.4 | 1.5 | 24.4 | 24.4 | 24.4 | 20.8 | 17.3 | 13.7 | 23.0 | 1.7 | 23.0 | 23.0 | 23.0 | 19.5 | 15.9 | 12.4 |
| | | **95°F** | | | | | | | | **105°F** | | | | | | | |
| 600 | 77 | 21.8 | 1.4 | 12.1 | 8.8 | 7.0 | - | - | - | 20.2 | 1.6 | 12.7 | 8.7 | 6.5 | - | - | - |
| | 72 | 20.0 | 1.4 | 15.2 | 13.0 | 10.7 | 8.4 | - | - | 18.4 | 1.6 | 14.7 | 12.4 | 10.1 | 7.8 | - | - |
| | 67 | 18.3 | 1.4 | 18.3 | 17.1 | 14.3 | 11.6 | 8.8 | - | 16.6 | 1.6 | 16.6 | 16.0 | 13.6 | 10.3 | 6.9 | - |
| | 62 | 16.6 | 1.4 | 16.6 | 16.6 | 16.6 | 12.4 | 8.2 | 3.9 | 15.4 | 1.6 | 15.4 | 15.4 | 15.4 | 11.2 | 7.1 | 2.9 |
| | 57 | 17.0 | 1.4 | 17.0 | 17.0 | 17.0 | 12.7 | 8.3 | 4.0 | 15.5 | 1.6 | 15.5 | 15.5 | 15.5 | 12.0 | 8.4 | 4.8 |
| 800 | 77 | 27.8 | 2.0 | 14.7 | 11.2 | 9.0 | - | - | - | 25.8 | 2.3 | 15.2 | 10.6 | 8.3 | - | - | - |
| | 72 | 25.5 | 1.9 | 18.9 | 16.2 | 13.4 | 10.7 | - | - | 23.6 | 2.2 | 18.3 | 15.5 | 12.7 | 9.9 | - | - |
| | 67 | 23.2 | 1.9 | 23.2 | 21.2 | 17.9 | 14.6 | 11.3 | - | 21.4 | 2.2 | 21.4 | 20.4 | 17.1 | 13.8 | 10.5 | - |
| | 62 | 21.4 | 1.9 | 21.4 | 21.4 | 21.4 | 17.9 | 14.4 | 10.9 | 19.9 | 2.1 | 19.9 | 19.9 | 19.9 | 16.4 | 12.9 | 9.4 |
| | 57 | 21.6 | 1.8 | 21.6 | 21.6 | 21.6 | 18.1 | 14.6 | 11.1 | 20.0 | 2.1 | 20.0 | 20.0 | 20.0 | 16.5 | 13.0 | 9.5 |
| | | **115°F** | | | | | | | | | | | | | | | |
| 600 | 77 | 18.7 | 1.8 | 13.2 | 8.5 | 6.0 | - | - | - | | | | | | | | |
| | 72 | 16.8 | 1.8 | 14.1 | 11.8 | 9.4 | 7.1 | - | - | | | | | | | | |
| | 67 | 15.0 | 1.8 | 15.0 | 15.0 | 12.9 | 9.0 | 5.1 | - | | | | | | | | |
| | 62 | 14.2 | 1.8 | 14.2 | 14.2 | 14.2 | 10.1 | 6.0 | 1.9 | | | | | | | | |
| | 57 | 14.1 | 1.8 | 14.1 | 14.1 | 14.1 | 11.3 | 8.4 | 5.6 | | | | | | | | |
| 800 | 77 | 23.7 | 2.5 | 15.7 | 10.1 | 7.6 | - | - | - | | | | | | | | |
| | 72 | 21.7 | 2.4 | 17.6 | 14.8 | 11.9 | 9.1 | - | - | | | | | | | | |
| | 67 | 19.6 | 2.3 | 19.6 | 19.5 | 16.2 | 13.0 | 9.7 | - | | | | | | | | |
| | 62 | 18.4 | 2.3 | 18.4 | 18.4 | 18.4 | 15.0 | 11.5 | 8.0 | | | | | | | | |
| | 57 | 18.3 | 2.3 | 18.3 | 18.3 | 18.3 | 14.8 | 11.3 | 7.8 | | | | | | | | |

1. These capacities are Net Capacities.
2. These ratings include the compressor, condenser fan and supply air blower motors.

## DEX030 (2.5 Ton)

| Air on Evaporator Coil | | Temperature of Air on Condenser Coil | | | | | | | | | | | | | | | |
|---|---|---|---|---|---|---|---|---|---|---|---|---|---|---|---|---|---|
| | | Net Capacity[1] (MBh) | Total Input (kW)[2] | Sensible Capacity (MBh) | | | | | | Net Capacity[1] (MBh) | Total Input (kW)[2] | Sensible Capacity (MBh) | | | | | |
| CFM | WB (°F) | | | Return Dry Bulb (°F) | | | | | | | | Return Dry Bulb (°F) | | | | | |
| | | | | 90 | 85 | 80 | 75 | 70 | 65 | | | 90 | 85 | 80 | 75 | 70 | 65 |
| | | **75°F** | | | | | | | | **85°F** | | | | | | | |
| 675 | 77 | 29.5 | 1.3 | 14.1 | 12.0 | 9.9 | - | - | - | 27.9 | 1.5 | 13.4 | 11.3 | 9.2 | - | - | - |
| | 72 | 27.2 | 1.3 | 18.6 | 16.2 | 13.7 | 11.3 | - | - | 25.7 | 1.5 | 17.9 | 15.5 | 13.1 | 10.6 | - | - |
| | 67 | 25.0 | 1.3 | 23.0 | 20.3 | 17.5 | 14.8 | 12.0 | - | 23.5 | 1.5 | 22.5 | 19.7 | 16.9 | 14.1 | 11.3 | - |
| | 62 | 22.8 | 1.4 | 22.8 | 22.8 | 21.4 | 17.3 | 13.3 | 9.2 | 21.5 | 1.5 | 21.5 | 21.5 | 20.7 | 16.5 | 12.4 | 8.3 |
| | 57 | 20.1 | 1.4 | 20.1 | 20.1 | 20.3 | 15.8 | 11.2 | 6.6 | 20.0 | 1.5 | 20.0 | 20.0 | 20.2 | 15.8 | 11.4 | 7.0 |
| 1000 | 77 | 37.4 | 2.1 | 16.7 | 14.7 | 12.0 | - | - | - | 37.2 | 2.3 | 17.4 | 14.7 | 12.0 | - | - | - |
| | 72 | 36.3 | 2.1 | 24.7 | 21.5 | 18.3 | 15.1 | - | - | 34.6 | 2.2 | 24.0 | 20.8 | 17.6 | 14.4 | - | - |
| | 67 | 35.3 | 2.1 | 32.7 | 28.3 | 24.5 | 20.8 | 17.0 | - | 32.0 | 2.2 | 30.7 | 26.9 | 23.2 | 19.4 | 15.7 | - |
| | 62 | 31.0 | 1.9 | 31.0 | 31.0 | 28.8 | 24.8 | 20.7 | 16.6 | 29.2 | 2.1 | 29.2 | 29.2 | 28.0 | 23.9 | 19.8 | 15.7 |
| | 57 | 30.5 | 1.9 | 30.5 | 30.5 | 30.5 | 26.3 | 22.1 | 17.9 | 28.9 | 2.1 | 28.9 | 28.9 | 28.8 | 24.7 | 20.5 | 16.3 |
| | | **95°F** | | | | | | | | **105°F** | | | | | | | |
| 675 | 77 | 26.3 | 1.7 | 12.6 | 10.6 | 8.6 | - | - | - | 24.3 | 2.0 | 12.7 | 9.3 | 7.8 | - | - | - |
| | 72 | 24.2 | 1.7 | 17.3 | 14.8 | 12.4 | 10.0 | - | - | 22.2 | 2.0 | 16.4 | 14.0 | 11.6 | 9.2 | - | - |
| | 67 | 22.0 | 1.7 | 21.9 | 19.1 | 16.2 | 13.4 | 10.6 | - | 20.2 | 2.0 | 20.1 | 18.7 | 15.4 | 12.1 | 8.8 | - |
| | 62 | 20.2 | 1.7 | 20.2 | 20.2 | 20.0 | 15.7 | 11.5 | 7.3 | 18.3 | 2.0 | 18.3 | 18.3 | 18.3 | 14.1 | 10.0 | 5.8 |
| | 57 | 19.9 | 1.7 | 19.9 | 19.9 | 20.2 | 15.9 | 11.6 | 7.4 | 18.3 | 2.0 | 18.3 | 18.3 | 18.6 | 14.9 | 11.1 | 7.4 |
| 1000 | 77 | 37.1 | 2.7 | 18.1 | 14.7 | 12.0 | - | - | - | 34.0 | 2.9 | 17.7 | 13.6 | 10.9 | - | - | - |
| | 72 | 32.9 | 2.5 | 23.4 | 20.1 | 16.9 | 13.7 | - | - | 30.5 | 2.8 | 22.4 | 19.2 | 16.0 | 12.8 | - | - |
| | 67 | 28.6 | 2.3 | 28.6 | 25.5 | 21.8 | 18.0 | 14.3 | - | 27.1 | 2.7 | 27.1 | 24.8 | 21.1 | 17.4 | 13.6 | - |
| | 62 | 27.5 | 2.4 | 27.5 | 27.5 | 27.1 | 23.0 | 18.9 | 14.8 | 25.6 | 2.7 | 25.6 | 25.6 | 25.4 | 21.3 | 17.3 | 13.2 |
| | 57 | 27.3 | 2.4 | 27.3 | 27.3 | 27.2 | 23.1 | 18.9 | 14.8 | 25.5 | 2.7 | 25.5 | 25.5 | 25.4 | 21.3 | 17.2 | 13.1 |
| | | **115°F** | | | | | | | | | | | | | | | |
| 675 | 77 | 22.3 | 2.2 | 12.8 | 8.1 | 7.1 | - | - | - | | | | | | | | |
| | 72 | 20.3 | 2.2 | 15.5 | 13.2 | 10.8 | 8.5 | - | - | | | | | | | | |
| | 67 | 18.3 | 2.2 | 18.3 | 18.3 | 14.6 | 10.8 | 7.1 | - | | | | | | | | |
| | 62 | 16.5 | 2.2 | 16.5 | 16.5 | 16.7 | 12.5 | 8.4 | 4.2 | | | | | | | | |
| | 57 | 16.8 | 2.2 | 16.8 | 16.8 | 17.0 | 13.8 | 10.6 | 7.4 | | | | | | | | |
| 1000 | 77 | 30.8 | 3.1 | 17.4 | 12.5 | 9.8 | - | - | - | | | | | | | | |
| | 72 | 28.2 | 3.1 | 21.5 | 18.3 | 15.1 | 11.9 | - | - | | | | | | | | |
| | 67 | 25.6 | 3.0 | 25.6 | 24.1 | 20.4 | 16.7 | 12.9 | - | | | | | | | | |
| | 62 | 23.8 | 2.9 | 23.8 | 23.8 | 23.7 | 19.7 | 15.6 | 11.5 | | | | | | | | |
| | 57 | 23.7 | 2.9 | 23.7 | 23.7 | 23.7 | 19.6 | 15.5 | 11.4 | | | | | | | | |

1. These capacities are Net Capacities.
2. These ratings include the compressor, condenser fan and supply air blower motors.

## DEX036 (3.0 Ton)

| Air on Evaporator Coil | | Temperature of Air on Condenser Coil | | | | | | | | | | | | | | | |
|---|---|---|---|---|---|---|---|---|---|---|---|---|---|---|---|---|---|
| | | Net Capacity[1] (MBh) | Total Input (kW)[2] | Sensible Capacity (MBh) | | | | | | Net Capacity[1] (MBh) | Total Input (kW)[2] | Sensible Capacity (MBh) | | | | | |
| CFM | WB (°F) | | | Return Dry Bulb (°F) | | | | | | | | Return Dry Bulb (°F) | | | | | |
| | | | | 90 | 85 | 80 | 75 | 70 | 65 | | | 90 | 85 | 80 | 75 | 70 | 65 |
| | | **75°F** | | | | | | | | **85°F** | | | | | | | |
| 800 | 77 | 36.6 | 1.5 | 17.4 | 15.3 | 12.6 | - | - | - | 34.0 | 1.7 | 17.2 | 14.4 | 11.7 | - | - | - |
| | 72 | 31.9 | 1.5 | 21.9 | 18.9 | 15.9 | 12.9 | - | - | 30.1 | 1.7 | 21.6 | 18.5 | 15.4 | 12.3 | - | - |
| | 67 | 27.2 | 1.5 | 26.5 | 22.6 | 19.2 | 15.7 | 12.3 | - | 26.3 | 1.7 | 25.9 | 22.5 | 19.1 | 15.7 | 12.3 | - |
| | 62 | 26.6 | 1.5 | 26.6 | 26.6 | 25.4 | 21.2 | 17.0 | 12.8 | 25.1 | 1.7 | 25.1 | 25.1 | 24.2 | 20.1 | 15.9 | 11.8 |
| | 57 | 23.8 | 1.5 | 23.8 | 23.8 | 24.0 | 19.8 | 15.5 | 11.2 | 23.6 | 1.7 | 23.6 | 23.6 | 23.6 | 19.4 | 15.2 | 11.0 |
| 1150 | 77 | 48.0 | 2.4 | 23.1 | 19.5 | 15.9 | - | - | - | 46.1 | 2.7 | 22.2 | 18.7 | 15.1 | - | - | - |
| | 72 | 44.5 | 2.4 | 30.7 | 26.6 | 22.5 | 18.4 | - | - | 42.3 | 2.7 | 29.7 | 25.6 | 21.5 | 17.5 | - | - |
| | 67 | 41.1 | 2.4 | 38.3 | 33.7 | 29.1 | 24.5 | 19.9 | - | 38.5 | 2.6 | 37.1 | 32.6 | 28.0 | 23.4 | 18.8 | - |
| | 62 | 37.5 | 2.3 | 37.5 | 37.5 | 36.4 | 31.4 | 26.4 | 21.4 | 35.7 | 2.5 | 35.7 | 35.7 | 34.7 | 29.7 | 24.7 | 19.7 |
| | 57 | 37.6 | 2.3 | 37.6 | 37.6 | 37.8 | 32.6 | 27.4 | 22.3 | 35.7 | 2.5 | 35.7 | 35.7 | 35.7 | 30.5 | 25.4 | 20.3 |
| | | **95°F** | | | | | | | | **105°F** | | | | | | | |
| 800 | 77 | 31.4 | 1.9 | 16.9 | 13.6 | 10.7 | - | - | - | 28.7 | 2.2 | 16.5 | 12.0 | 9.5 | - | - | - |
| | 72 | 28.4 | 1.9 | 21.2 | 18.0 | 14.9 | 11.8 | - | - | 26.1 | 2.2 | 20.0 | 16.9 | 13.9 | 10.8 | - | - |
| | 67 | 25.4 | 1.9 | 25.4 | 22.5 | 19.1 | 15.7 | 12.3 | - | 23.5 | 2.2 | 23.5 | 21.9 | 18.2 | 14.6 | 11.0 | - |
| | 62 | 23.5 | 1.9 | 23.5 | 23.5 | 23.1 | 19.0 | 14.9 | 10.8 | 21.6 | 2.2 | 21.6 | 21.6 | 21.4 | 17.3 | 13.3 | 9.2 |
| | 57 | 23.5 | 1.9 | 23.5 | 23.5 | 23.2 | 19.0 | 14.9 | 10.7 | 21.9 | 2.2 | 21.9 | 21.9 | 21.7 | 17.8 | 13.9 | 10.0 |
| 1150 | 77 | 44.2 | 3.2 | 21.3 | 17.8 | 14.3 | - | - | - | 41.1 | 3.4 | 21.3 | 16.5 | 13.0 | - | - | - |
| | 72 | 40.1 | 3.1 | 28.6 | 24.6 | 20.6 | 16.5 | - | - | 37.4 | 3.3 | 27.5 | 23.5 | 19.4 | 15.4 | - | - |
| | 67 | 36.0 | 2.9 | 36.0 | 31.4 | 26.8 | 22.3 | 17.7 | - | 33.8 | 3.2 | 33.8 | 30.5 | 25.9 | 21.4 | 16.8 | - |
| | 62 | 33.9 | 2.9 | 33.9 | 33.9 | 32.9 | 28.0 | 23.0 | 18.0 | 31.5 | 3.2 | 31.5 | 31.5 | 31.1 | 26.2 | 21.3 | 16.5 |
| | 57 | 33.7 | 2.9 | 33.7 | 33.7 | 33.5 | 28.5 | 23.4 | 18.3 | 31.7 | 3.1 | 31.7 | 31.7 | 31.5 | 26.6 | 21.6 | 16.6 |
| | | **115°F** | | | | | | | | | | | | | | | |
| 800 | 77 | 26.1 | 2.4 | 16.2 | 10.5 | 8.3 | - | - | - | | | | | | | | |
| | 72 | 23.8 | 2.4 | 18.9 | 15.8 | 12.8 | 9.8 | - | - | | | | | | | | |
| | 67 | 21.6 | 2.4 | 21.6 | 21.2 | 17.3 | 13.5 | 9.6 | - | | | | | | | | |
| | 62 | 19.8 | 2.4 | 19.8 | 19.8 | 19.8 | 15.7 | 11.6 | 7.6 | | | | | | | | |
| | 57 | 20.3 | 2.4 | 20.3 | 20.3 | 20.1 | 16.5 | 12.9 | 9.3 | | | | | | | | |
| 1150 | 77 | 38.0 | 3.8 | 21.2 | 15.2 | 11.7 | - | - | - | | | | | | | | |
| | 72 | 34.8 | 3.8 | 26.4 | 22.4 | 18.3 | 14.3 | - | - | | | | | | | | |
| | 67 | 31.6 | 3.7 | 31.6 | 29.6 | 25.0 | 20.5 | 15.9 | - | | | | | | | | |
| | 62 | 29.2 | 3.6 | 29.2 | 29.2 | 29.2 | 24.4 | 19.7 | 14.9 | | | | | | | | |
| | 57 | 29.6 | 3.6 | 29.6 | 29.6 | 29.5 | 24.7 | 19.8 | 15.0 | | | | | | | | |

1. These capacities are Net Capacities.
2. These ratings include the compressor, condenser fan and supply air blower motors.

## DEX042 (3.5 Ton)

| Air on Evaporator Coil | | Temperature of Air on Condenser Coil | | | | | | | | | | | | | | | |
|---|---|---|---|---|---|---|---|---|---|---|---|---|---|---|---|---|---|
| | | Net Capacity[1] (MBh) | Total Input (kW)[2] | Sensible Capacity (MBh) | | | | | | Net Capacity[1] (MBh) | Total Input (kW)[2] | Sensible Capacity (MBh) | | | | | |
| CFM | WB (°F) | | | Return Dry Bulb (°F) | | | | | | | | Return Dry Bulb (°F) | | | | | |
| | | | | 90 | 85 | 80 | 75 | 70 | 65 | | | 90 | 85 | 80 | 75 | 70 | 65 |
| | | **75°F** | | | | | | | | **85°F** | | | | | | | |
| 925 | 77 | 40.2 | 1.9 | 21.0 | 17.4 | 13.7 | - | - | - | 37.3 | 2.2 | 19.2 | 15.7 | 12.2 | - | - | - |
| | 72 | 37.1 | 1.9 | 26.3 | 22.4 | 18.5 | 14.7 | - | - | 34.5 | 2.1 | 24.8 | 20.9 | 17.1 | 13.3 | - | - |
| | 67 | 34.0 | 1.9 | 31.6 | 27.5 | 23.3 | 19.2 | 15.1 | - | 31.6 | 2.1 | 30.3 | 26.2 | 22.1 | 18.0 | 13.8 | - |
| | 62 | 30.5 | 1.9 | 30.5 | 30.5 | 27.7 | 23.2 | 18.8 | 14.3 | 28.1 | 2.1 | 28.1 | 28.1 | 26.5 | 22.0 | 17.6 | 13.2 |
| | 57 | 29.4 | 1.8 | 29.4 | 29.4 | 29.4 | 24.8 | 20.1 | 15.5 | 27.5 | 2.1 | 27.5 | 27.5 | 27.5 | 22.9 | 18.3 | 13.7 |
| 1400 | 77 | 61.7 | 3.4 | 29.1 | 24.8 | 20.4 | - | - | - | 56.7 | 3.3 | 27.2 | 22.8 | 18.4 | - | - | - |
| | 72 | 55.5 | 3.1 | 37.9 | 32.7 | 27.6 | 22.4 | - | - | 51.6 | 3.3 | 36.1 | 31.0 | 25.8 | 20.7 | - | - |
| | 67 | 49.4 | 3.1 | 46.7 | 40.7 | 34.7 | 28.8 | 22.8 | - | 46.5 | 3.3 | 45.0 | 39.1 | 33.3 | 27.5 | 21.7 | - |
| | 62 | 44.5 | 3.0 | 44.5 | 44.5 | 42.4 | 36.2 | 30.1 | 23.9 | 41.8 | 3.2 | 41.8 | 41.8 | 40.8 | 34.6 | 28.4 | 22.3 |
| | 57 | 46.0 | 2.9 | 46.0 | 46.0 | 45.5 | 39.2 | 32.8 | 26.4 | 42.9 | 3.1 | 42.9 | 42.9 | 42.7 | 36.4 | 30.1 | 23.8 |
| | | **95°F** | | | | | | | | **105°F** | | | | | | | |
| 925 | 77 | 34.4 | 2.4 | 17.5 | 14.0 | 10.6 | - | - | - | 31.7 | 2.6 | 17.7 | 12.8 | 9.6 | - | - | - |
| | 72 | 31.8 | 2.3 | 23.3 | 19.5 | 15.7 | 11.9 | - | - | 29.0 | 2.6 | 21.9 | 18.3 | 14.6 | 10.9 | - | - |
| | 67 | 29.2 | 2.3 | 29.1 | 24.9 | 20.8 | 16.7 | 12.6 | - | 26.3 | 2.6 | 26.2 | 23.8 | 19.6 | 15.5 | 11.4 | - |
| | 62 | 25.7 | 2.4 | 25.7 | 25.7 | 25.3 | 20.9 | 16.5 | 12.1 | 23.5 | 2.6 | 23.5 | 23.5 | 23.3 | 18.9 | 14.5 | 10.1 |
| | 57 | 25.6 | 2.4 | 25.6 | 25.6 | 25.6 | 21.0 | 16.5 | 11.9 | 23.6 | 2.7 | 23.6 | 23.6 | 23.5 | 19.1 | 14.7 | 10.4 |
| 1400 | 77 | 51.7 | 3.8 | 25.3 | 20.8 | 16.3 | - | - | - | 47.4 | 4.1 | 24.9 | 18.7 | 14.5 | - | - | - |
| | 72 | 47.6 | 3.7 | 34.3 | 29.2 | 24.1 | 19.0 | - | - | 43.5 | 4.0 | 32.2 | 27.3 | 22.4 | 17.5 | - | - |
| | 67 | 43.5 | 3.5 | 43.3 | 37.6 | 31.9 | 26.2 | 20.5 | - | 39.5 | 3.9 | 39.4 | 35.9 | 30.3 | 24.7 | 19.1 | - |
| | 62 | 39.2 | 3.5 | 39.2 | 39.2 | 39.2 | 33.0 | 26.8 | 20.7 | 36.2 | 3.8 | 36.2 | 36.2 | 36.2 | 30.1 | 24.0 | 17.9 |
| | 57 | 39.8 | 3.5 | 39.8 | 39.8 | 39.8 | 33.6 | 27.4 | 21.2 | 36.7 | 3.8 | 36.7 | 36.7 | 36.8 | 30.7 | 24.6 | 18.5 |
| | | **115°F** | | | | | | | | | | | | | | | |
| 925 | 77 | 28.9 | 2.9 | 17.9 | 11.5 | 8.6 | - | - | - | | | | | | | | |
| | 72 | 26.2 | 2.9 | 20.6 | 17.1 | 13.5 | 9.9 | - | - | | | | | | | | |
| | 67 | 23.4 | 2.9 | 23.4 | 22.6 | 18.4 | 14.3 | 10.1 | - | | | | | | | | |
| | 62 | 21.3 | 2.9 | 21.3 | 21.3 | 21.3 | 16.9 | 12.6 | 8.2 | | | | | | | | |
| | 57 | 21.5 | 2.9 | 21.5 | 21.5 | 21.4 | 17.2 | 13.0 | 8.8 | | | | | | | | |
| 1400 | 77 | 43.2 | 4.5 | 24.6 | 16.5 | 12.6 | - | - | - | | | | | | | | |
| | 72 | 39.4 | 4.4 | 30.1 | 25.4 | 20.7 | 16.0 | - | - | | | | | | | | |
| | 67 | 35.6 | 4.3 | 35.6 | 34.2 | 28.7 | 23.3 | 17.8 | - | | | | | | | | |
| | 62 | 33.2 | 4.2 | 33.2 | 33.2 | 33.3 | 27.2 | 21.2 | 15.2 | | | | | | | | |
| | 57 | 33.6 | 4.2 | 33.6 | 33.6 | 33.8 | 27.8 | 21.9 | 15.9 | | | | | | | | |

1. These capacities are Net Capacities.
2. These ratings include the compressor, condenser fan and supply air blower motors.

## DEX048 (4.0 Ton)

| Air on Evaporator Coil | | Temperature of Air on Condenser Coil | | | | | | | | | | | | | | | |
|---|---|---|---|---|---|---|---|---|---|---|---|---|---|---|---|---|---|
| | | Net Capacity[1] (MBh) | Total Input (kW)[2] | Sensible Capacity (MBh) | | | | | | Net Capacity[1] (MBh) | Total Input (kW)[2] | Sensible Capacity (MBh) | | | | | |
| CFM | WB (°F) | | | Return Dry Bulb (°F) | | | | | | | | Return Dry Bulb (°F) | | | | | |
| | | | | 90 | 85 | 80 | 75 | 70 | 65 | | | 90 | 85 | 80 | 75 | 70 | 65 |
| | | **75°F** | | | | | | | | **85°F** | | | | | | | |
| 1050 | 77 | 47.3 | 2.2 | 23.6 | 19.9 | 16.0 | - | - | - | 44.7 | 2.4 | 22.6 | 18.6 | 14.6 | - | - | - |
| | 72 | 43.7 | 2.1 | 30.5 | 26.1 | 21.8 | 17.5 | - | - | 41.1 | 2.4 | 29.4 | 25.0 | 20.6 | 16.2 | - | - |
| | 67 | 40.1 | 2.1 | 37.3 | 32.3 | 27.6 | 22.9 | 18.1 | - | 37.5 | 2.4 | 36.1 | 31.4 | 26.6 | 21.8 | 17.0 | - |
| | 62 | 35.9 | 2.1 | 35.9 | 35.9 | 33.2 | 28.9 | 24.6 | 20.3 | 33.8 | 2.4 | 33.8 | 33.8 | 32.1 | 27.7 | 23.3 | 18.9 |
| | 57 | 35.5 | 2.1 | 35.5 | 35.5 | 35.5 | 30.9 | 26.3 | 21.6 | 33.4 | 2.4 | 33.4 | 33.4 | 33.4 | 28.8 | 24.2 | 19.7 |
| 1600 | 77 | 66.0 | 3.6 | 30.9 | 26.5 | 21.0 | - | - | - | 62.1 | 3.8 | 29.9 | 24.5 | 19.1 | - | - | - |
| | 72 | 61.0 | 3.5 | 42.4 | 36.3 | 30.1 | 24.0 | - | - | 57.3 | 3.7 | 40.7 | 34.6 | 28.5 | 22.3 | - | - |
| | 67 | 56.0 | 3.4 | 53.9 | 46.0 | 39.2 | 32.4 | 25.7 | - | 52.5 | 3.6 | 51.5 | 44.7 | 37.9 | 31.1 | 24.3 | - |
| | 62 | 51.7 | 3.3 | 51.7 | 51.7 | 48.9 | 41.6 | 34.2 | 26.8 | 48.7 | 3.5 | 48.7 | 48.7 | 47.2 | 39.8 | 32.4 | 24.9 |
| | 57 | 50.8 | 3.2 | 50.8 | 50.8 | 50.7 | 43.0 | 35.4 | 27.7 | 47.8 | 3.5 | 47.8 | 47.8 | 47.7 | 40.2 | 32.6 | 25.1 |
| | | **95°F** | | | | | | | | **105°F** | | | | | | | |
| 1050 | 77 | 42.1 | 2.7 | 21.6 | 17.3 | 13.2 | - | - | - | 38.2 | 3.1 | 22.1 | 16.4 | 12.0 | - | - | - |
| | 72 | 38.5 | 2.7 | 28.3 | 23.8 | 19.4 | 14.9 | - | - | 35.1 | 3.0 | 27.0 | 22.6 | 18.2 | 13.7 | - | - |
| | 67 | 35.0 | 2.7 | 35.0 | 30.4 | 25.6 | 20.7 | 15.9 | - | 31.9 | 3.0 | 31.9 | 28.8 | 24.3 | 19.8 | 15.3 | - |
| | 62 | 31.8 | 2.7 | 31.8 | 31.8 | 30.9 | 26.4 | 22.0 | 17.5 | 29.1 | 3.0 | 29.1 | 29.1 | 28.7 | 24.2 | 19.7 | 15.3 |
| | 57 | 31.3 | 2.7 | 31.3 | 31.3 | 31.3 | 26.8 | 22.2 | 17.7 | 29.0 | 3.0 | 29.0 | 29.0 | 29.0 | 24.2 | 19.4 | 14.6 |
| 1600 | 77 | 58.1 | 4.2 | 29.0 | 22.5 | 17.1 | - | - | - | 53.4 | 4.5 | 30.3 | 21.0 | 15.7 | - | - | - |
| | 72 | 53.6 | 4.1 | 39.0 | 32.9 | 26.8 | 20.7 | - | - | 49.0 | 4.4 | 37.5 | 31.4 | 25.3 | 19.3 | - | - |
| | 67 | 49.0 | 4.0 | 49.0 | 43.4 | 36.5 | 29.7 | 22.9 | - | 44.6 | 4.3 | 44.6 | 41.8 | 34.9 | 28.1 | 21.2 | - |
| | 62 | 45.6 | 3.9 | 45.6 | 45.6 | 45.5 | 38.0 | 30.5 | 23.0 | 41.6 | 4.2 | 41.6 | 41.6 | 41.6 | 34.1 | 26.6 | 19.2 |
| | 57 | 44.9 | 3.9 | 44.9 | 44.9 | 44.8 | 37.4 | 29.9 | 22.4 | 41.4 | 4.2 | 41.4 | 41.4 | 41.3 | 34.0 | 26.7 | 19.3 |
| | | **115°F** | | | | | | | | | | | | | | | |
| 1050 | 77 | 34.3 | 3.4 | 22.6 | 15.4 | 10.8 | - | - | - | | | | | | | | |
| | 72 | 31.6 | 3.4 | 25.7 | 21.3 | 16.9 | 12.6 | - | - | | | | | | | | |
| | 67 | 28.9 | 3.3 | 28.9 | 27.2 | 23.1 | 18.9 | 14.7 | - | | | | | | | | |
| | 62 | 26.4 | 3.3 | 26.4 | 26.4 | 26.4 | 22.0 | 17.5 | 13.0 | | | | | | | | |
| | 57 | 26.7 | 3.3 | 26.7 | 26.7 | 26.7 | 21.6 | 16.5 | 11.4 | | | | | | | | |
| 1600 | 77 | 48.7 | 4.9 | 31.7 | 19.6 | 14.4 | - | - | - | | | | | | | | |
| | 72 | 44.4 | 4.8 | 36.0 | 29.9 | 23.8 | 17.8 | - | - | | | | | | | | |
| | 67 | 40.2 | 4.8 | 40.2 | 40.2 | 33.3 | 26.4 | 19.5 | - | | | | | | | | |
| | 62 | 37.7 | 4.6 | 37.7 | 37.7 | 37.7 | 30.2 | 22.8 | 15.3 | | | | | | | | |
| | 57 | 37.9 | 4.6 | 37.9 | 37.9 | 37.9 | 30.6 | 23.4 | 16.2 | | | | | | | | |

1. These capacities are Net Capacities.
2. These ratings include the compressor, condenser fan and supply air blower motors.

# Airflow Performance

## Side Duct Application

### DEX024-048

| Size (Tons) | Model | Mode | | Thermostat Input | Speed Tap | CFM | External Static Pressure (Inch Water Gauge) 0.2 Watts | 0.3 Watts | 0.4 Watts | 0.5 Watts | 0.6 Watts | 0.7 Watts | 0.8 Watts | 0.9 Watts | 1.0 Watts |
|---|---|---|---|---|---|---|---|---|---|---|---|---|---|---|---|
| 024 (2.0) | DEX | Cool | Low | Y1 | COOL-A | 600 | 57 | 74 | 91 | 108 | 126 | 143 | 161 | 179 | 197 |
| | | | | Y1 | COOL-B | 450 | 39 | 54 | 69 | 84 | 100 | 117 | 134 | 152 | 171 |
| | | | | Y1 | COOL-C | 525 | 47 | 63 | 79 | 95 | 112 | 129 | 146 | 164 | 182 |
| | | | | Y1 | COOL-D | 675 | 71 | 88 | 106 | 124 | 142 | 161 | 179 | 198 | 216 |
| | | | High | Y1+Y2 | COOL-A | 800 | 99 | 117 | 137 | 156 | 176 | 196 | 217 | 237 | 258 |
| | | | | Y1+Y2 | COOL-B | 600 | 57 | 74 | 91 | 108 | 126 | 143 | 161 | 179 | 197 |
| | | | | Y1+Y2 | COOL-C | 700 | 76 | 94 | 112 | 130 | 148 | 167 | 186 | 205 | 224 |
| | | | | Y1+Y2 | COOL-D | 900 | 126 | 146 | 166 | 187 | 208 | 231 | 253 | 277 | 300 |
| | | Heat | | W1 | HEAT-A | 800 | 99 | 117 | 137 | 156 | - | - | - | - | - |
| | | | | W1 | HEAT-B | 720 | 80 | 98 | 116 | 135 | - | - | - | - | - |
| | | | | W1 | HEAT-C | 880 | 120 | 140 | 160 | 180 | - | - | - | - | - |
| 030 (2.5) | DEX | Cool | Low | Y1 | COOL-A | 670 | 61 | 78 | 95 | 113 | 130 | 148 | 166 | 184 | 201 |
| | | | | Y1 | COOL-B | 620 | 54 | 70 | 87 | 104 | 121 | 138 | 156 | 173 | 191 |
| | | | | Y1 | COOL-C | 720 | 70 | 88 | 106 | 124 | 142 | 160 | 178 | 197 | 215 |
| | | | | Y1 | COOL-D | 770 | 81 | 99 | 118 | 136 | 155 | 174 | 193 | 213 | 232 |
| | | | High | Y1+Y2 | COOL-A | 1000 | 159 | 179 | 200 | 222 | 246 | 270 | 296 | 323 | 350 |
| | | | | Y1+Y2 | COOL-B | 925 | 129 | 148 | 169 | 190 | 211 | 233 | 256 | 280 | 304 |
| | | | | Y1+Y2 | COOL-C | 1075 | 194 | 214 | 236 | 260 | 285 | 312 | 341 | 371 | 403 |
| | | | | Y1+Y2 | COOL-D | 1150 | 233 | 254 | 277 | 302 | 330 | 360 | 392 | 427 | 463 |
| | | Heat | | W1 | HEAT-A | 1000 | 159 | 179 | 200 | 222 | - | - | - | - | - |
| | | | | W1 | HEAT-B | 900 | 120 | 139 | 159 | 180 | - | - | - | - | - |
| | | | | W1 | HEAT-C | 1100 | 206 | 227 | 249 | 274 | - | - | - | - | - |
| | | | | W1 | HEAT-D | 1000 | 159 | 179 | 200 | 222 | - | - | - | - | - |
| 036 (3.0) | DEX | Cool | Low | Y1 | COOL-A | 900 | 120 | 139 | 159 | 180 | 201 | 222 | 244 | 267 | 291 |
| | | | | Y1 | COOL-B | 750 | 76 | 94 | 113 | 131 | 150 | 168 | 187 | 206 | 225 |
| | | | | Y1 | COOL-C | 830 | 97 | 116 | 135 | 155 | 174 | 194 | 215 | 236 | 256 |
| | | | | Y1 | COOL-D | 980 | 150 | 170 | 191 | 213 | 236 | 260 | 285 | 311 | 337 |
| | | | High | Y1+Y2 | COOL-A | 1200 | 261 | 283 | 306 | 333 | 362 | 394 | 429 | 467 | 507 |
| | | | | Y1+Y2 | COOL-B | 1000 | 159 | 179 | 200 | 222 | 246 | 270 | 296 | 323 | 350 |
| | | | | Y1+Y2 | COOL-C | 1100 | 206 | 227 | 249 | 274 | 300 | 328 | 357 | 389 | 422 |
| | | | | Y1+Y2 | COOL-D | 1300 | 325 | 346 | 372 | 401 | 434 | 471 | 511 | 556 | 604 |
| | | Heat | | W1 | HEAT-A | 1200 | 261 | 283 | 306 | 333 | - | - | - | - | - |
| | | | | W1 | HEAT-B | 1080 | 196 | 217 | 239 | 263 | - | - | - | - | - |
| | | | | W1 | HEAT-C | 1275 | 308 | 330 | 355 | 383 | - | - | - | - | - |
| | | | | W1 | HEAT-D | 1200 | 261 | 283 | 306 | 333 | - | - | - | - | - |
| 042 (3.5) | DEX | Cool | Low | Y1 | COOL-A | 920 | 139 | 166 | 195 | 224 | 255 | 286 | 319 | 352 | 386 |
| | | | | Y1 | COOL-B | 790 | 100 | 124 | 149 | 176 | 205 | 235 | 266 | 299 | 333 |
| | | | | Y1 | COOL-C | 850 | 117 | 143 | 170 | 198 | 227 | 257 | 289 | 322 | 356 |
| | | | | Y1 | COOL-D | 980 | 159 | 188 | 218 | 249 | 281 | 313 | 346 | 379 | 414 |
| | | | High | Y1+Y2 | COOL-A | 1400 | 338 | 383 | 426 | 468 | 509 | 549 | 589 | 627 | 664 |
| | | | | Y1+Y2 | COOL-B | 1200 | 245 | 281 | 318 | 354 | 390 | 426 | 462 | 497 | 533 |
| | | | | Y1+Y2 | COOL-C | 1300 | 290 | 330 | 370 | 409 | 447 | 485 | 523 | 560 | 596 |
| | | | | Y1+Y2 | COOL-D | 1500 | 391 | 439 | 486 | 532 | 576 | 618 | 660 | 700 | 739 |
| | | Heat | | W1 | HEAT-A | 1225 | 256 | 293 | 330 | 367 | - | - | - | - | - |
| | | | | W1 | HEAT-B | 1100 | 203 | 237 | 270 | 304 | - | - | - | - | - |
| | | | | W1 | HEAT-C | 1350 | 314 | 356 | 397 | 438 | - | - | - | - | - |
| | | | | W1 | HEAT-D | 1225 | 256 | 293 | 330 | 367 | - | - | - | - | - |
| 048 (4.0) | DEX | Cool | Low | Y1 | COOL-A | 1050 | 184 | 216 | 248 | 280 | 313 | 346 | 380 | 414 | 449 |
| | | | | Y1 | COOL-B | 920 | 139 | 166 | 195 | 224 | 255 | 286 | 319 | 352 | 386 |
| | | | | Y1 | COOL-C | 980 | 159 | 188 | 218 | 249 | 281 | 313 | 346 | 379 | 414 |
| | | | | Y1 | COOL-D | 1120 | 211 | 245 | 279 | 313 | 348 | 382 | 417 | 452 | 486 |
| | | | High | Y1+Y2 | COOL-A | 1600 | 448 | 500 | 551 | 600 | 647 | 693 | 736 | 779 | 819 |
| | | | | Y1+Y2 | COOL-B | 1400 | 338 | 383 | 426 | 468 | 509 | 549 | 589 | 627 | 664 |
| | | | | Y1+Y2 | COOL-C | 1500 | 391 | 439 | 486 | 532 | 576 | 618 | 660 | 700 | 739 |
| | | | | Y1+Y2 | COOL-D | 1700 | 508 | 565 | 620 | 672 | 723 | 772 | 818 | 863 | 905 |
| | | Heat | | W1 | HEAT-A | 1600 | 448 | 500 | 551 | 600 | 647 | - | - | - | - |
| | | | | W1 | HEAT-B | 1440 | 359 | 405 | 449 | 493 | 535 | - | - | - | - |
| | | | | W1 | HEAT-C | 1760 | 546 | 606 | 663 | 718 | 771 | - | - | - | - |
| | | | | W1 | HEAT-D | 1600 | 448 | 500 | 551 | 600 | 647 | - | - | - | - |

## Bottom Duct Application

### DEX024-048

| Size (Tons) | Model | Mode | | Thermostat Input | Speed Tap | CFM | External Static Pressure (Inch Water Gauge) 0.2 Watts | 0.3 Watts | 0.4 Watts | 0.5 Watts | 0.6 Watts | 0.7 Watts | 0.8 Watts | 0.9 Watts | 1.0 Watts |
|---|---|---|---|---|---|---|---|---|---|---|---|---|---|---|---|
| 024 (2.0) | DEX | Cool | Low | Y1 | COOL-A | 600 | 57 | 74 | 91 | 108 | 126 | 143 | 161 | 179 | 197 |
| | | | | Y1 | COOL-B | 450 | 39 | 54 | 69 | 84 | 100 | 117 | 134 | 152 | 171 |
| | | | | Y1 | COOL-C | 525 | 47 | 63 | 79 | 95 | 112 | 129 | 146 | 164 | 182 |
| | | | | Y1 | COOL-D | 675 | 71 | 88 | 106 | 124 | 142 | 161 | 179 | 198 | 216 |
| | | | High | Y1+Y2 | COOL-A | 800 | 99 | 117 | 137 | 156 | 176 | 196 | 217 | 237 | 258 |
| | | | | Y1+Y2 | COOL-B | 600 | 57 | 74 | 91 | 108 | 126 | 143 | 161 | 179 | 197 |
| | | | | Y1+Y2 | COOL-C | 700 | 76 | 94 | 112 | 130 | 148 | 167 | 186 | 205 | 224 |
| | | | | Y1+Y2 | COOL-D | 900 | 126 | 146 | 166 | 187 | 208 | 231 | 253 | 277 | 300 |
| | | Heat | | W1 | HEAT-A | 800 | 99 | 117 | 137 | 156 | - | - | - | - | - |
| | | | | W1 | HEAT-B | 720 | 80 | 98 | 116 | 135 | - | - | - | - | - |
| | | | | W1 | HEAT-C | 880 | 120 | 140 | 160 | 180 | - | - | - | - | - |
| 030 (2.5) | DEX | Cool | Low | Y1 | COOL-A | 670 | 61 | 78 | 95 | 113 | 130 | 148 | 166 | 184 | 201 |
| | | | | Y1 | COOL-B | 620 | 54 | 70 | 87 | 104 | 121 | 138 | 156 | 173 | 191 |
| | | | | Y1 | COOL-C | 720 | 70 | 88 | 106 | 124 | 142 | 160 | 178 | 197 | 215 |
| | | | | Y1 | COOL-D | 770 | 81 | 99 | 118 | 136 | 155 | 174 | 193 | 213 | 232 |
| | | | High | Y1+Y2 | COOL-A | 1000 | 159 | 179 | 200 | 222 | 246 | 270 | 296 | 323 | 350 |
| | | | | Y1+Y2 | COOL-B | 925 | 129 | 148 | 169 | 190 | 211 | 233 | 256 | 280 | 304 |
| | | | | Y1+Y2 | COOL-C | 1075 | 194 | 214 | 236 | 260 | 285 | 312 | 341 | 371 | 403 |
| | | | | Y1+Y2 | COOL-D | 1150 | 233 | 254 | 277 | 302 | 330 | 360 | 392 | 427 | 463 |
| | | Heat | | W1 | HEAT-A | 1000 | 159 | 179 | 200 | 222 | - | - | - | - | - |
| | | | | W1 | HEAT-B | 900 | 120 | 139 | 159 | 180 | - | - | - | - | - |
| | | | | W1 | HEAT-C | 1100 | 206 | 227 | 249 | 274 | - | - | - | - | - |
| | | | | W1 | HEAT-D | 1000 | 159 | 179 | 200 | 222 | - | - | - | - | - |
| 036 (3.0) | DEX | Cool | Low | Y1 | COOL-A | 900 | 120 | 139 | 159 | 180 | 201 | 222 | 244 | 267 | 291 |
| | | | | Y1 | COOL-B | 750 | 76 | 94 | 113 | 131 | 150 | 168 | 187 | 206 | 225 |
| | | | | Y1 | COOL-C | 830 | 97 | 116 | 135 | 155 | 174 | 194 | 215 | 236 | 256 |
| | | | | Y1 | COOL-D | 980 | 150 | 170 | 191 | 213 | 236 | 260 | 285 | 311 | 337 |
| | | | High | Y1+Y2 | COOL-A | 1200 | 261 | 283 | 306 | 333 | 362 | 394 | 429 | 467 | 507 |
| | | | | Y1+Y2 | COOL-B | 1000 | 159 | 179 | 200 | 222 | 246 | 270 | 296 | 323 | 350 |
| | | | | Y1+Y2 | COOL-C | 1100 | 206 | 227 | 249 | 274 | 300 | 328 | 357 | 389 | 422 |
| | | | | Y1+Y2 | COOL-D | 1300 | 325 | 346 | 372 | 401 | 434 | 471 | 511 | 556 | 604 |
| | | Heat | | W1 | HEAT-A | 1200 | 261 | 283 | 306 | 333 | - | - | - | - | - |
| | | | | W1 | HEAT-B | 1080 | 196 | 217 | 239 | 263 | - | - | - | - | - |
| | | | | W1 | HEAT-C | 1275 | 308 | 330 | 355 | 383 | - | - | - | - | - |
| | | | | W1 | HEAT-D | 1200 | 261 | 283 | 306 | 333 | - | - | - | - | - |
| 042 (3.5) | DEX | Cool | Low | Y1 | COOL-A | 920 | 139 | 166 | 195 | 224 | 255 | 286 | 319 | 352 | 386 |
| | | | | Y1 | COOL-B | 790 | 100 | 124 | 149 | 176 | 205 | 235 | 266 | 299 | 333 |
| | | | | Y1 | COOL-C | 850 | 117 | 143 | 170 | 198 | 227 | 257 | 289 | 322 | 356 |
| | | | | Y1 | COOL-D | 980 | 159 | 188 | 218 | 249 | 281 | 313 | 346 | 379 | 414 |
| | | | High | Y1+Y2 | COOL-A | 1400 | 338 | 383 | 426 | 468 | 509 | 549 | 589 | 627 | 664 |
| | | | | Y1+Y2 | COOL-B | 1200 | 245 | 281 | 318 | 354 | 390 | 426 | 462 | 497 | 533 |
| | | | | Y1+Y2 | COOL-C | 1300 | 290 | 330 | 370 | 409 | 447 | 485 | 523 | 560 | 596 |
| | | | | Y1+Y2 | COOL-D | 1500 | 391 | 439 | 486 | 532 | 576 | 618 | 660 | 700 | 739 |
| | | Heat | | W1 | HEAT-A | 1225 | 256 | 293 | 330 | 367 | - | - | - | - | - |
| | | | | W1 | HEAT-B | 1100 | 203 | 237 | 270 | 304 | - | - | - | - | - |
| | | | | W1 | HEAT-C | 1350 | 314 | 356 | 397 | 438 | - | - | - | - | - |
| | | | | W1 | HEAT-D | 1225 | 256 | 293 | 330 | 367 | - | - | - | - | - |
| 048 (4.0) | DEX | Cool | Low | Y1 | COOL-A | 1050 | 184 | 216 | 248 | 280 | 313 | 346 | 380 | 414 | 449 |
| | | | | Y1 | COOL-B | 920 | 139 | 166 | 195 | 224 | 255 | 286 | 319 | 352 | 386 |
| | | | | Y1 | COOL-C | 980 | 159 | 188 | 218 | 249 | 281 | 313 | 346 | 379 | 414 |
| | | | | Y1 | COOL-D | 1120 | 211 | 245 | 279 | 313 | 348 | 382 | 417 | 452 | 486 |
| | | | High | Y1+Y2 | COOL-A | 1600 | 448 | 500 | 551 | 600 | 647 | 693 | 736 | 779 | 819 |
| | | | | Y1+Y2 | COOL-B | 1400 | 338 | 383 | 426 | 468 | 509 | 549 | 589 | 627 | 664 |
| | | | | Y1+Y2 | COOL-C | 1500 | 391 | 439 | 486 | 532 | 576 | 618 | 660 | 700 | 739 |
| | | | | Y1+Y2 | COOL-D | 1700 | 508 | 565 | 620 | 672 | 723 | 772 | 818 | 863 | 905 |
| | | Heat | | W1 | HEAT-A | 1600 | 448 | 500 | 551 | 600 | 647 | - | - | - | - |
| | | | | W1 | HEAT-B | 1440 | 359 | 405 | 449 | 493 | 535 | - | - | - | - |
| | | | | W1 | HEAT-C | 1760 | 546 | 606 | 663 | 718 | 771 | - | - | - | - |
| | | | | W1 | HEAT-D | 1600 | 448 | 500 | 551 | 600 | 647 | - | - | - | - |

## Additional Static Resistance

| Size (Tons) | Model | CFM | Wet Indoor Coil | Economizer[1] | Filter/Frame Kit | Electric Heat |
|---|---|---|---|---|---|---|
| 024 (2.0) | DEX | 500 | 0.01 | 0.00 | 0.01 | 0.02 |
| | | 600 | 0.01 | 0.00 | 0.02 | 0.03 |
| | | 700 | 0.01 | 0.00 | 0.02 | 0.03 |
| | | 800 | 0.01 | 0.01 | 0.02 | 0.03 |
| | | 900 | 0.01 | 0.01 | 0.02 | 0.04 |
| | | 1000 | 0.02 | 0.01 | 0.02 | 0.04 |
| | | 1100 | 0.03 | 0.01 | 0.03 | 0.05 |
| | | 1200 | 0.04 | 0.02 | 0.03 | 0.06 |
| 030 (2.5) | DEX | 700 | 0.01 | 0.00 | 0.02 | 0.03 |
| | | 800 | 0.01 | 0.01 | 0.02 | 0.03 |
| | | 900 | 0.01 | 0.01 | 0.02 | 0.04 |
| | | 1000 | 0.02 | 0.01 | 0.02 | 0.04 |
| | | 1100 | 0.03 | 0.01 | 0.03 | 0.05 |
| | | 1200 | 0.04 | 0.02 | 0.03 | 0.06 |
| | | 1300 | 0.07 | 0.03 | 0.17 | - |
| 036 (3.0) | DEX | 700 | 0.01 | 0.00 | 0.02 | 0.03 |
| | | 800 | 0.01 | 0.01 | 0.02 | 0.03 |
| | | 900 | 0.01 | 0.01 | 0.02 | 0.04 |
| | | 1000 | 0.02 | 0.01 | 0.02 | 0.04 |
| | | 1100 | 0.03 | 0.01 | 0.03 | 0.05 |
| | | 1200 | 0.04 | 0.02 | 0.03 | 0.06 |
| | | 1300 | 0.04 | 0.03 | 0.03 | 0.07 |
| | | 1400 | 0.04 | 0.04 | 0.03 | 0.08 |
| 042 (3.5) | DEX | 1100 | 0.03 | 0.01 | 0.03 | 0.05 |
| | | 1200 | 0.04 | 0.02 | 0.03 | 0.06 |
| | | 1300 | 0.04 | 0.03 | 0.03 | 0.07 |
| | | 1400 | 0.04 | 0.04 | 0.03 | 0.08 |
| | | 1500 | 0.05 | 0.05 | 0.04 | 0.09 |
| | | 1600 | 0.06 | 0.06 | 0.05 | 0.10 |
| 048 (4.0) | DEX | 1100 | 0.03 | 0.01 | 0.03 | 0.05 |
| | | 1200 | 0.04 | 0.02 | 0.03 | 0.06 |
| | | 1300 | 0.04 | 0.03 | 0.03 | 0.07 |
| | | 1400 | 0.04 | 0.04 | 0.03 | 0.08 |
| | | 1500 | 0.04 | 0.05 | 0.04 | 0.09 |
| | | 1600 | 0.04 | 0.06 | 0.05 | 0.10 |
| | | 1700 | 0.05 | 0.07 | 0.05 | 0.11 |
| | | 1800 | 0.05 | 0.07 | 0.06 | 0.11 |
| | | 1900 | 0.06 | 0.08 | 0.06 | 0.11 |
| | | 2000 | 0.07 | 0.08 | 0.07 | 0.12 |

1. The pressure drop through the economizer is greater for 100% outdoor air than for 100% return air. If the resistance of the return air duct is less than 0.25 IWG, the unit will deliver less CFM during full economizer operation.

### Electric Heat Minimum Supply Air

| Size (Tons) | Model | Voltage | Minimum Supply Air (CFM) Heater kW | | | | | |
|---|---|---|---|---|---|---|---|---|
| | | | 5.0 | 7.5 | 10.0 | 15.0 | 20.0 | 25.0 |
| 024 (2.0) | DEX | 208/230-1-60 | 630 | 630 | 800 | - | - | - |
| 030 (2.5) | DEX | 208/230-1-60 | 630 | 630 | 800 | 800 | - | - |
| 036 (3.0) | DEX | 208/230-1-60 | 1070 | 1070 | 1070 | 1070 | - | - |
| | | 208/230-3-60 | 1070 | 1070 | 1070 | 1070 | - | - |
| | | 460-3-60 | 1070 | 1070 | 1070 | 1070 | - | - |
| 042 (3.5) | DEX | 208/230-1-60 | 1225 | 1225 | 1225 | 1225 | - | - |
| 048 (4.0) | DEX | 208/230-1-60 | - | - | 1200 | 1430 | 1430 | 1430 |
| | | 208/230-3-60 | - | - | 1200 | 1430 | 1430 | 1430 |
| | | 460-3-60 | - | - | 1200 | 1430 | 1430 | 1430 |

### Indoor Blower Specifications

| Size (Tons) | Model | Motor | | | | |
|---|---|---|---|---|---|---|
| | | HP | RPM | Eff. | SF | Frame |
| 024 (2.0) | DEX | 1/2 | Variable | 0.8 | 1.0 | 48 |
| 030 (2.5) | DEX | 1/2 | Variable | 0.8 | 1.0 | 48 |
| 036 (3.0) | DEX | 1/2 | Variable | 0.8 | 1.0 | 48 |
| 042 (3.5) | DEX | 3/4 | Variable | 0.8 | 1.0 | 48 |
| 048 (4.0) | DEX | 3/4 | Variable | 0.8 | 1.0 | 48 |

### Electric Heat Multipliers

| Voltage | | kW Capacity Multipliers[1] |
|---|---|---|
| Nominal | Applied | |
| 240 | 208 | 0.75 |
| | 230 | 0.92 |
| 480 | 460 | 0.92 |

1. Electric heaters are rated at nominal voltage. Use this table to determine the electric heat capacity for heaters applied at lower voltages.

## Sound Performance

### Outdoor Sound Power Levels

| Size (Tons) | Model | Sound Rating[1] dB (A) | Octave Band Centerline Frequency (Hz) | | | | | | |
|---|---|---|---|---|---|---|---|---|---|
| | | | 125 | 250 | 500 | 1000 | 2000 | 4000 | 8000 |
| 024 (2.0) | DEX | 73 | 61.5 | 64.5 | 68.5 | 66.5 | 62 | 60 | 54 |
| 030 (2.5) | DEX | 77 | 60 | 62.5 | 64.5 | 75.5 | 62.5 | 59.5 | 58.5 |
| 036 (3.0) | DEX | 78 | 63 | 65 | 76 | 73 | 64.5 | 62.5 | 60 |
| 042 (3.5) | DEX | 76 | 67.5 | 68.5 | 69.5 | 69 | 66 | 63.5 | 60 |
| 048 (4.0) | DEX | 79 | 71.5 | 69.5 | 71.5 | 75.5 | 68 | 67 | 62 |

1. Rated in accordance with AHRI 270 standard.

# Electrical Data

## DEX024-048 Cooling Only With/Without Electric Heat

| Size (Tons) | Volt | Compressors (each) | | | OD Fan Motors (each) | Supply Blower Motor | Electric Heat Option | | | | MCA[1] (Amps) | Max Fuse[2]/ Breaker[3] Size (Amps) |
|---|---|---|---|---|---|---|---|---|---|---|---|---|
| | | RLA | LRA | MCC | FLA | FLA | Model | kW | Stages | Amps | | |
| 024 (2.0) | 208/230-1-60 | 10.2 | 52 | 16 | 1.2 | 4.3 | None | - | - | - | 18.3 | 25 |
| | | | | | | | 2NH04500506 | 3.8/5 | 1 | 18.1/20.8 | 27.9 / 31.4 | 30 / 35 |
| | | | | | | | 2NH04500706 | 5.6/7.5 | 2 | 27.1/31.3 | 39.2 / 44.4 | 40 / 45 |
| | | | | | | | 2NH04501006 | 7.5/10 | 2 | 36.1/41.7 | 50.5 / 57.5 | 60 / 60 |
| 030 (2.5) | 208/230-1-60 | 14.1 | 70 | 22 | 1.2 | 4.3 | None | - | - | - | 23.1 | 30 |
| | | | | | | | 2NH04500506 | 3.8/5 | 1 | 18.1/20.8 | 27.9 / 31.4 | 35 / 35 |
| | | | | | | | 2NH04500706 | 5.6/7.5 | 2 | 27.1/31.3 | 39.2 / 44.4 | 40 / 45 |
| | | | | | | | 2NH04501006 | 7.5/10 | 2 | 36.1/41.7 | 50.5 / 57.5 | 60 / 60 |
| | | | | | | | 2NH04501506 | 11.3/15 | 2 | 54.2/62.5 | 73.1 / 83.5 | 80 / 90 |
| 036 (3.0) | 208/230-1-60 | 16.6 | 82 | 26 | 1.2 | 4.3 | None | - | - | - | 26.3 | 35 |
| | | | | | | | 2NH04500506 | 3.8/5 | 1 | 18.1/20.8 | 27.9 / 31.4 | 35 / 40 |
| | | | | | | | 2NH04500706 | 5.6/7.5 | 2 | 27.1/31.3 | 39.2 / 44.4 | 40 / 45 |
| | | | | | | | 2NH04501006 | 7.5/10 | 2 | 36.1/41.7 | 50.5 / 57.5 | 60 / 60 |
| | | | | | | | 2NH04501506 | 11.3/15 | 2 | 54.2/62.5 | 73.1 / 83.5 | 80 / 90 |
| | 208/230-3-60 | 11.1 | 58 | 17 | 1.2 | 4.3 | None | - | - | - | 19.4 | 25 |
| | | | | | | | 2NH04501025 | 7.5/10 | 1 | 20.8/24.1 | 31.4 / 35.4 | 35 / 40 |
| | | | | | | | 2NH04501525 | 11.3/15 | 1 | 31.3/36.1 | 44.5 / 50.5 | 45 / 60 |
| | 460-3-60 | 4.5 | 29 | 7 | 0.8 | 4.3 | None | - | - | - | 10.7 | 15 |
| | | | | | | | 2NH04501046 | 10 | 1 | 12 | 20.4 | 25 |
| | | | | | | | 2NH04501546 | 15 | 1 | 18 | 27.9 | 30 |
| 042 (3.5) | 208/230-1-60 | 16.6 | 96 | 26 | 1.4 | 6.8 | None | - | - | - | 29 | 35 |
| | | | | | | | 2NH04500506 | 3.8/5 | 1 | 18.1/20.8 | 31.1 / 34.5 | 40 / 45 |
| | | | | | | | 2NH04500706 | 5.6/7.5 | 2 | 27.1/31.3 | 42.4 / 47.6 | 45 / 50 |
| | | | | | | | 2NH04501006 | 7.5/10 | 2 | 36.1/41.7 | 53.6 / 60.6 | 60 / 70 |
| | | | | | | | 2NH04501506 | 11.3/15 | 2 | 54.2/62.5 | 76.2 / 86.6 | 80 / 90 |
| 048 (4.0) | 208/230-1-60 | 21.1 | 96 | 33 | 1.7 | 6.8 | None | - | - | - | 34.9 | 45 |
| | | | | | | | 2NH04501006 | 7.5/10 | 2 | 36.1/41.7 | 53.6 / 60.6 | 60 / 70 |
| | | | | | | | 2NH04501506 | 11.3/15 | 2 | 54.2/62.5 | 76.2 / 86.6 | 80 / 90 |
| | | | | | | | 2NH04502006 | 15/20 | 2 | 72.2/83.3 | 98.8 / 112.7 | 100 / 125 |
| | | | | | | | 2NH04502506 | 18.8/25 | 2 | 90.3/104.2 | 121.3 / 138.7 | 125 / 150 |
| | 208/230-3-60 | 13.4 | 88 | 21 | 1.7 | 6.8 | None | - | - | - | 25.3 | 35 |
| | | | | | | | 2NH04501025 | 7.5/10 | 1 | 20.8/24.1 | 34.6 / 38.6 | 35 / 40 |
| | | | | | | | 2NH04501525 | 11.3/15 | 1 | 31.3/36.1 | 47.6 / 53.6 | 50 / 60 |
| | | | | | | | 2NH04502025 | 15/20 | 2 | 41.7/48.1 | 60.6 / 68.6 | 70 / 70 |
| | | | | | | | 2NH04502525 | 18.8/25 | 2 | 52.1/60.1 | 73.7 / 83.7 | 80 / 90 |
| | 460-3-60 | 6.4 | 41 | 10 | 1.0 | 6.8 | None | - | - | - | 15.9 | 20 |
| | | | | | | | 2NH04501046 | 10 | 1 | 12 | 23.5 | 25 |
| | | | | | | | 2NH04501546 | 15 | 1 | 18 | 31.1 | 35 |
| | | | | | | | 2NH04502046 | 20 | 2 | 24.1 | 38.6 | 40 |
| | | | | | | | 2NH04502546 | 25 | 2 | 30.1 | 46.1 | 50 |

1. Minimum Circuit Ampacity.
2. Maximum Over Current Protection per standard UL 1995.
3. Fuse or HACR circuit breaker size installed at factory or field installed.

# Typical Wiring Diagrams

## Typical DEX024, 048 Cooling Only 208/230-1-60 volt Wiring Diagram

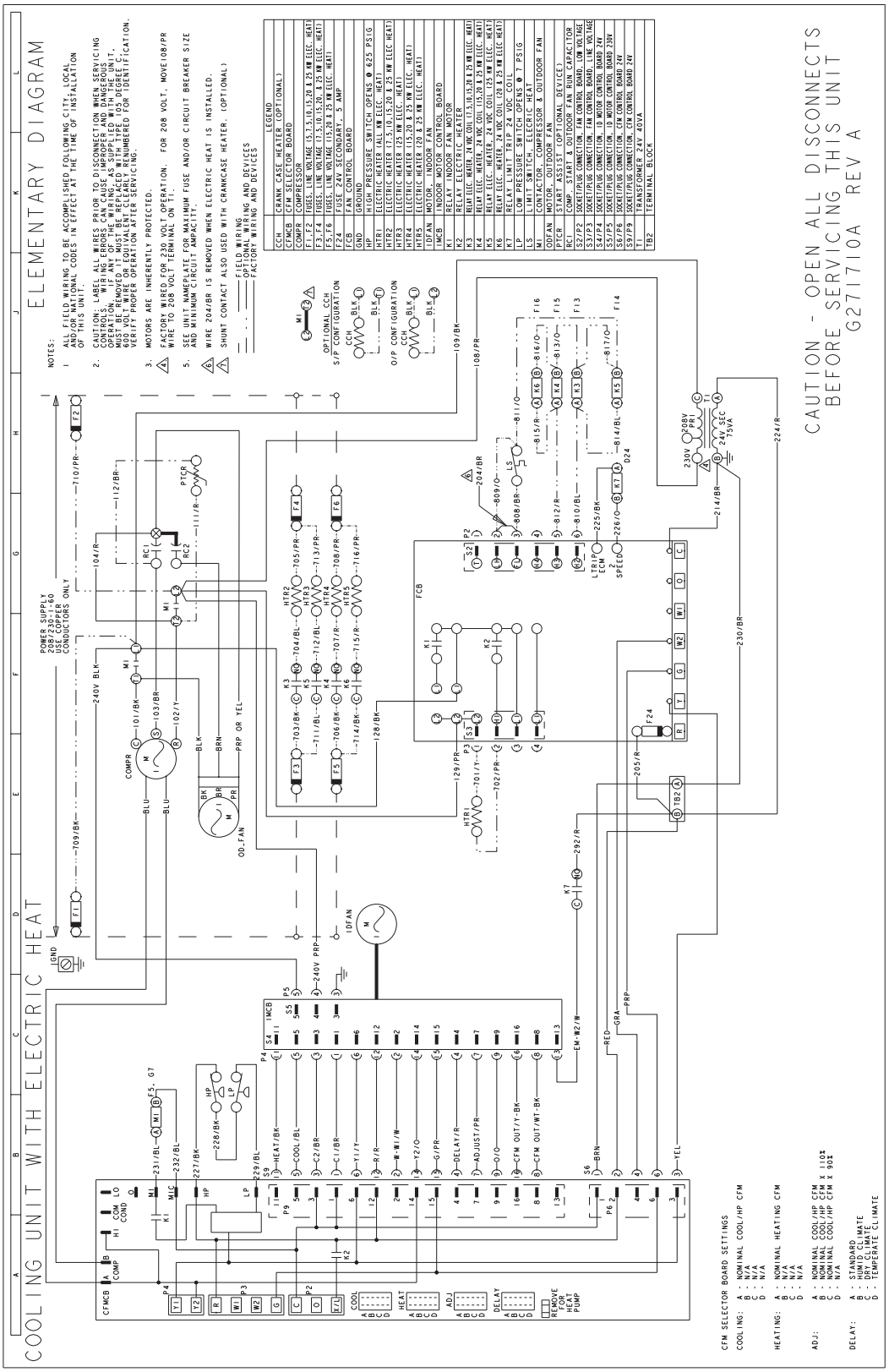

**Typical DEX036, 048 Cooling Only 208/230-3-60 volt Wiring Diagram**

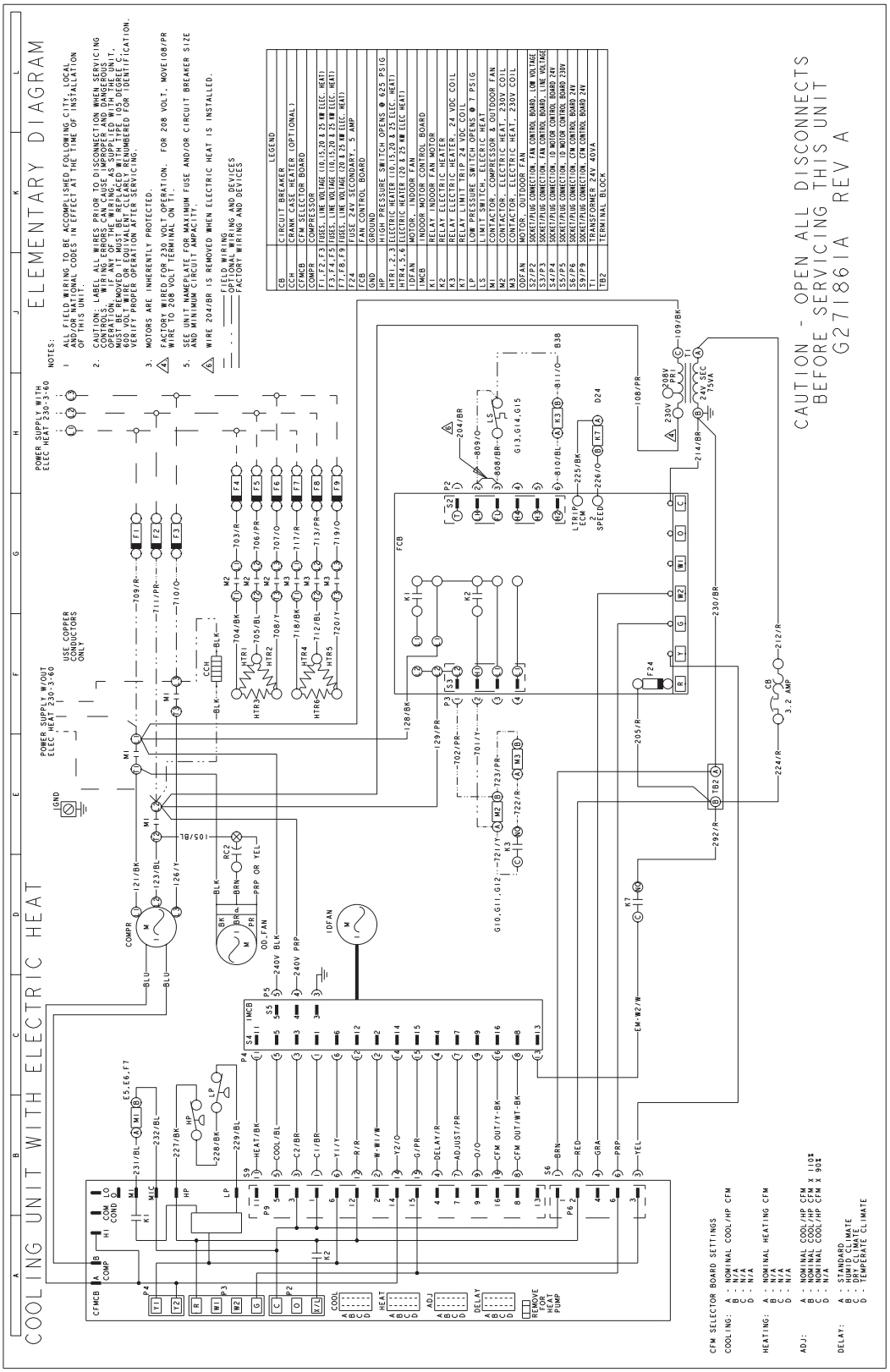

## Typical DEX036, 048 Cooling Only 460-3-60 volt Wiring Diagram

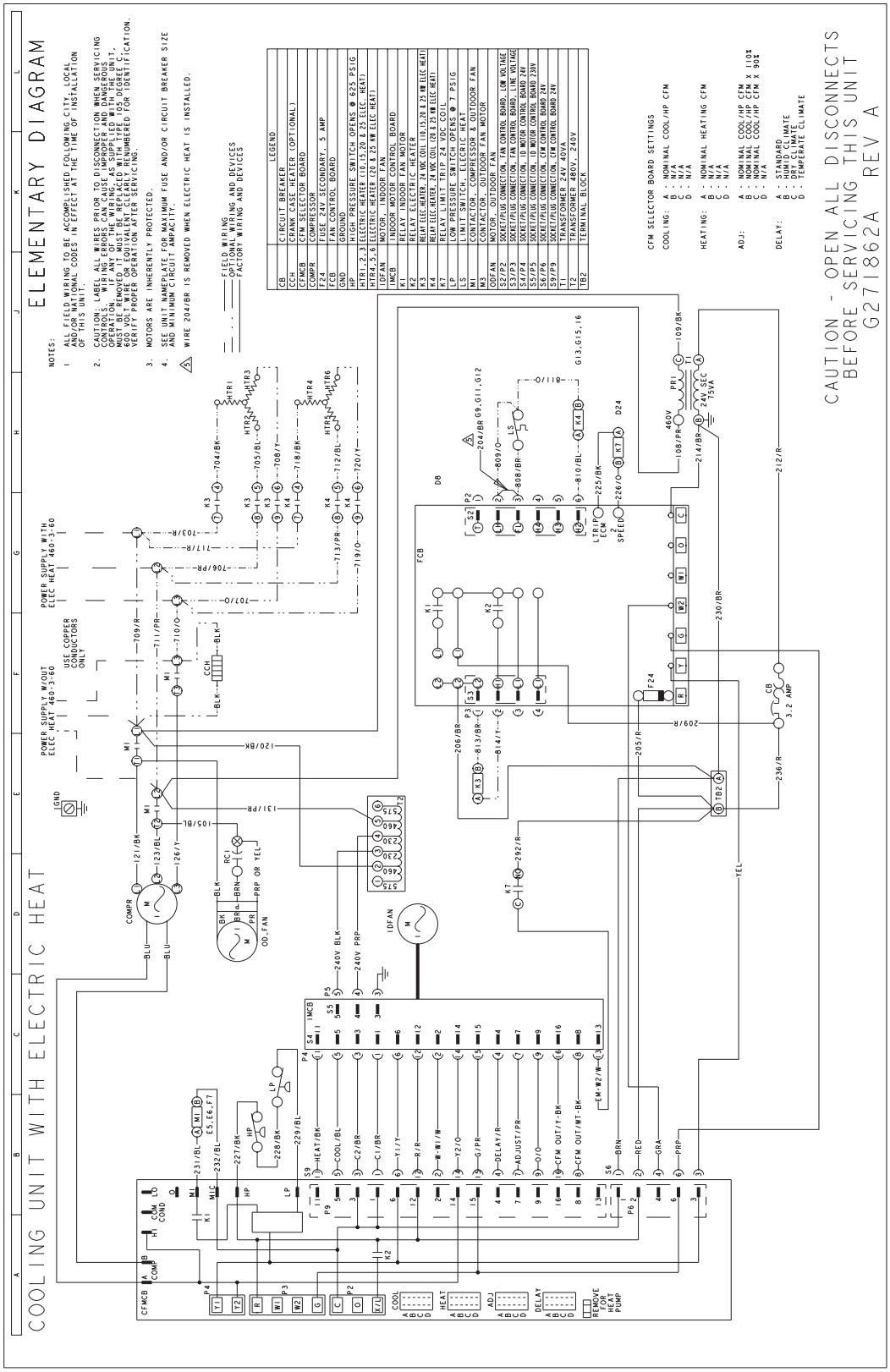

# Weights and Dimensions

## Unit 4 Point Load Weight

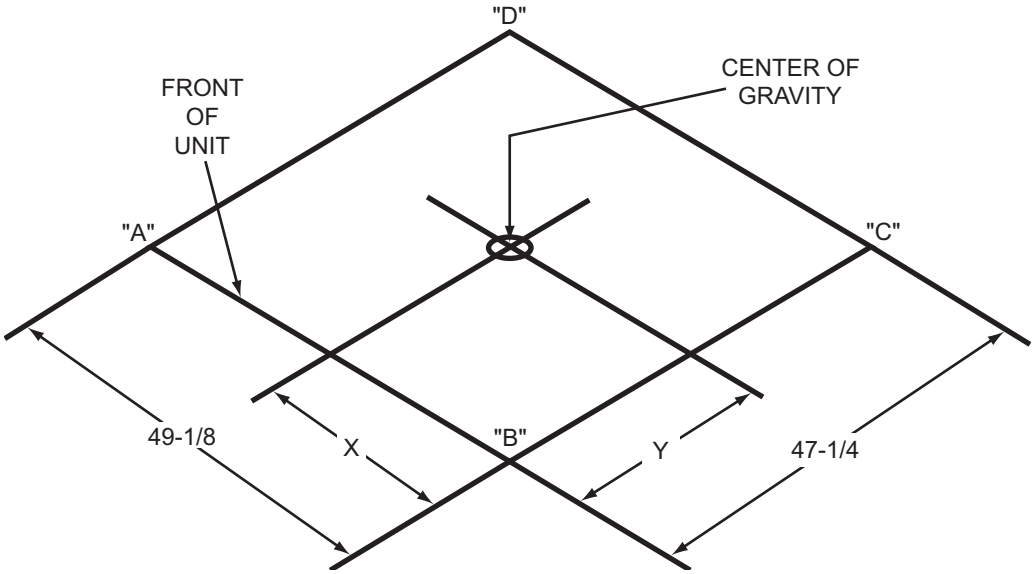


| Size (Tons) | Model | Weight (lbs.) | | Center of Gravity | | 4 Point Load Location (lbs.) | | | |
|---|---|---|---|---|---|---|---|---|---|
| | | Shipping | Operating | X | Y | A | B | C | D |
| 024 (2.0) | DEX | 360 | 355 | 22.25 | 25 | 96 | 84 | 81 | 93 |
| 030 (2.5) | DEX | 395 | 390 | 22.25 | 25 | 106 | 92 | 89 | 102 |
| 036 (3.0) | DEX | 405 | 400 | 22.25 | 25 | 109 | 95 | 92 | 105 |
| 042 (3.5) | DEX | 415 | 410 | 22.25 | 25 | 111 | 97 | 94 | 108 |
| 048 (4.0) | DEX | 445 | 440 | 22.25 | 25 | 120 | 104 | 101 | 115 |

## Unit Accessory Weights

| Unit Accessory | Model | Weight (lbs.) | |
|---|---|---|---|
| | | Shipping | Operating |
| Add Economizer | All | 45 | 40 |
| Add Electric Heat[1] | All | 13 | 12 |

1. Weight given is for the maximum heater size available (25 kW).

## Cooling Only Unit Dimensions

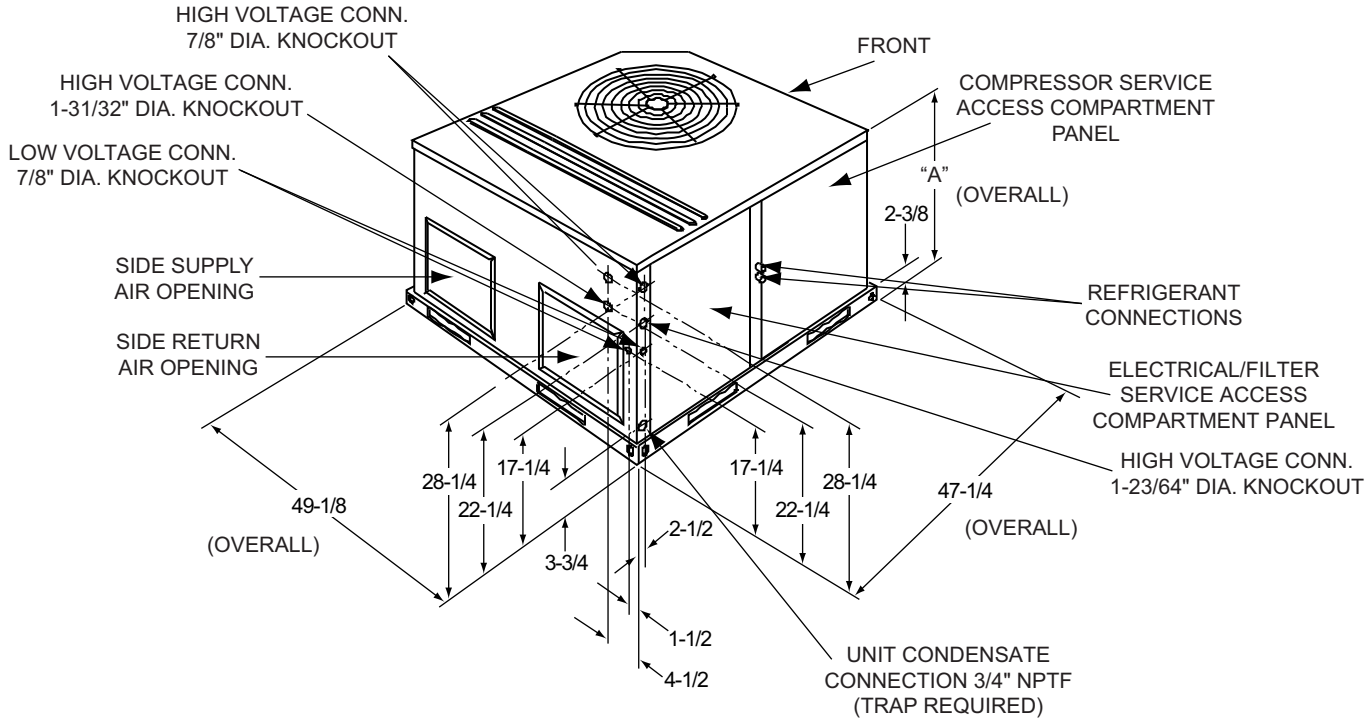


### Cooling Only Unit Dimensions

| Unit Size | Dimensions |
|---|---|
| | "A" |
| 024, 030, 036 | 33-1/2 |
| 042, 048 | 41-1/2 |

### Cooling Only Unit Clearances

| Direction | Distance (in.) | Direction | Distance (in.) |
|---|---|---|---|
| Top[1] | 36 | Right | 24 |
| Front | 12 | Left | 24 |
| Rear | 0 | Bottom[2 3] | 0 |

1. Units must be installed outdoors. Over hanging structure or shrubs should not obscure condenser air discharge outlet.
2. Units may be installed on combustable floors made from wood or class A, B or C roof covering materials.
3. Minimum Clearance of 1inch all sides of supply air duct for the first 3 foot of duct for 20 & 25 kW., zero inches there after. For all other heaters, zero inch clearance all sides for entire length of duct.

**Note:** For units applied with a roof curb, the minimum clearance may be reduced from 1 inch to 1/2 inch between combustible roof curb material and this supply air duct.

**Unit Dimensions Front and Bottom**

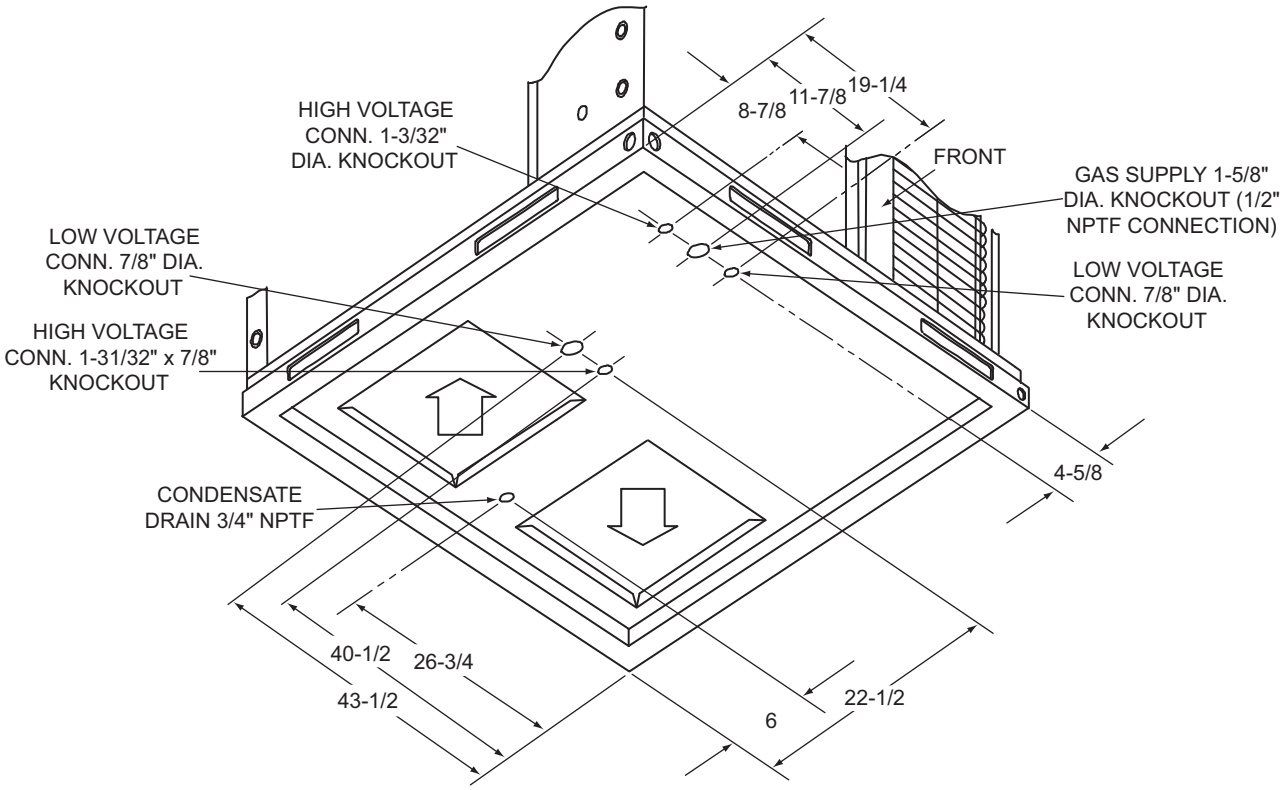


**Unit Dimensions Back and Bottom**

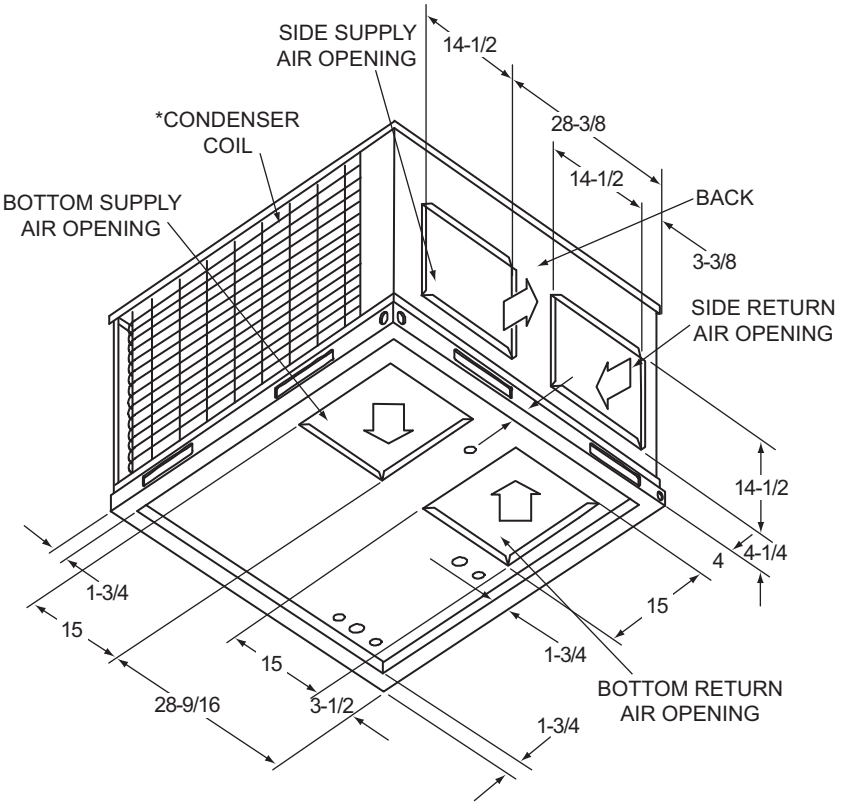

**Unit Typical Duct Applications**

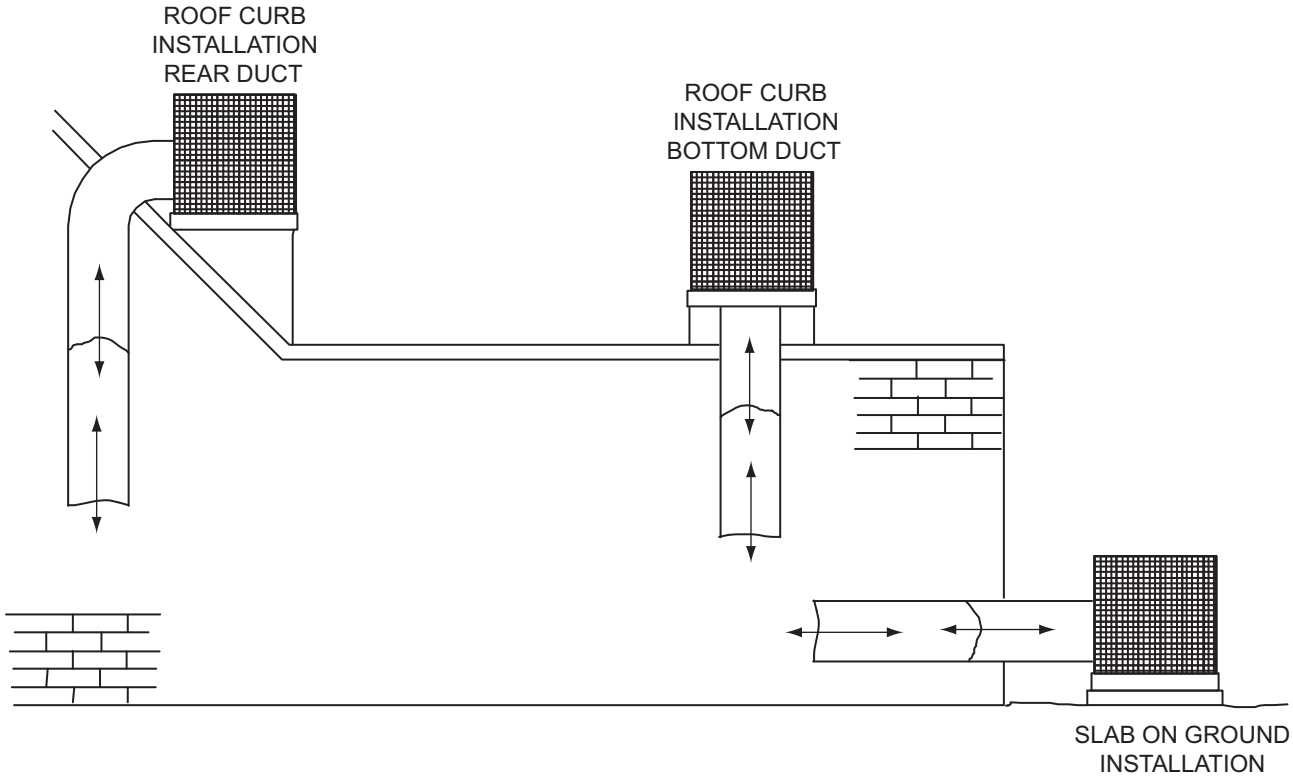


**Unit Typical Slab on Ground Installation**

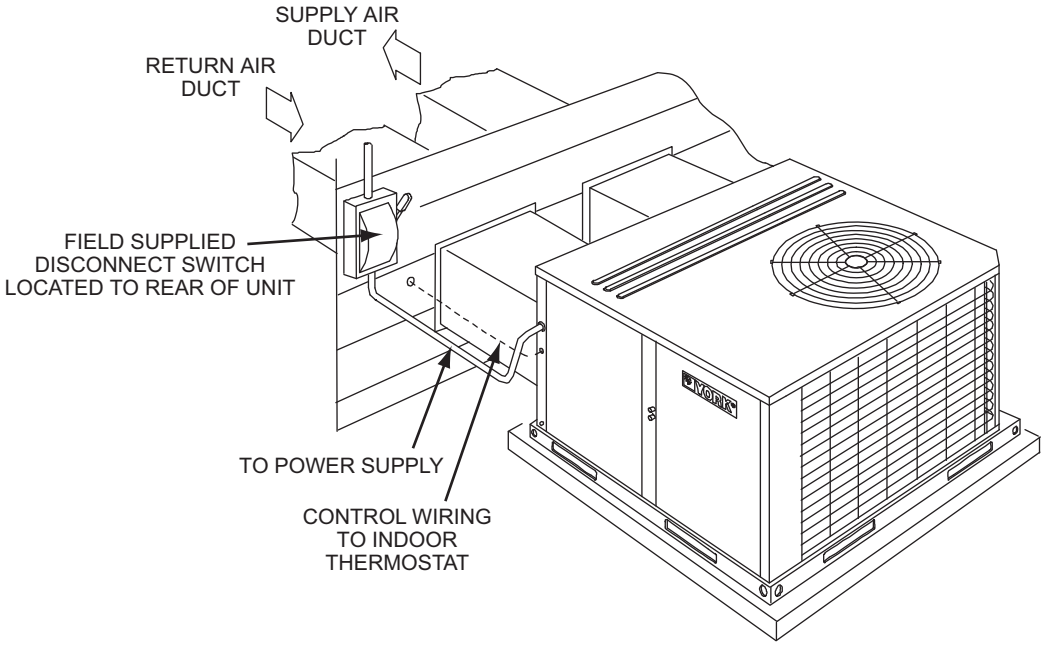

**Unit Typical Roof Curb Installation**

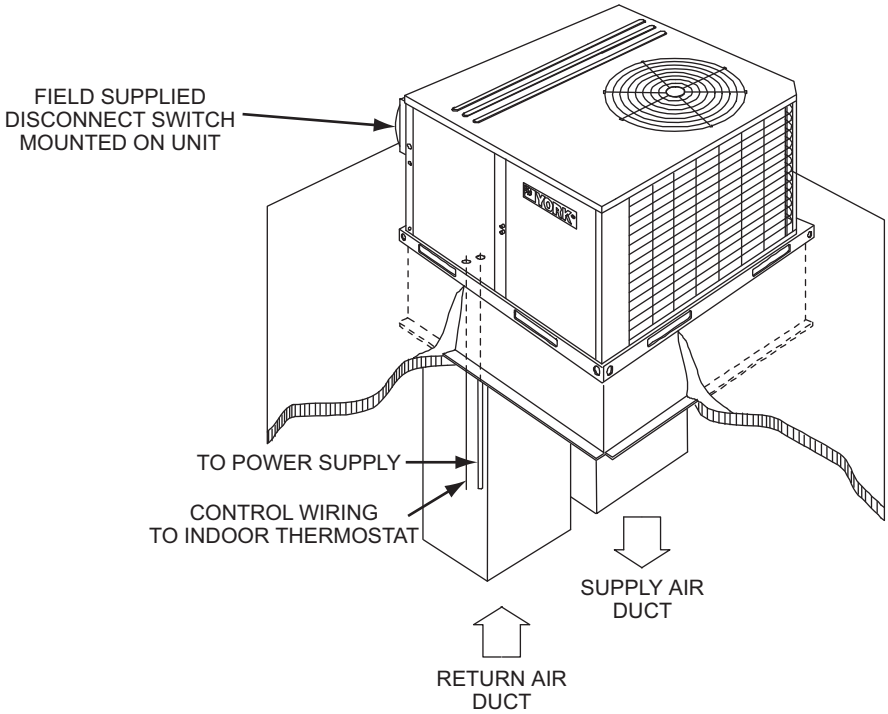


## Unit Accessory Dimensions

**Roof Curb[1]**

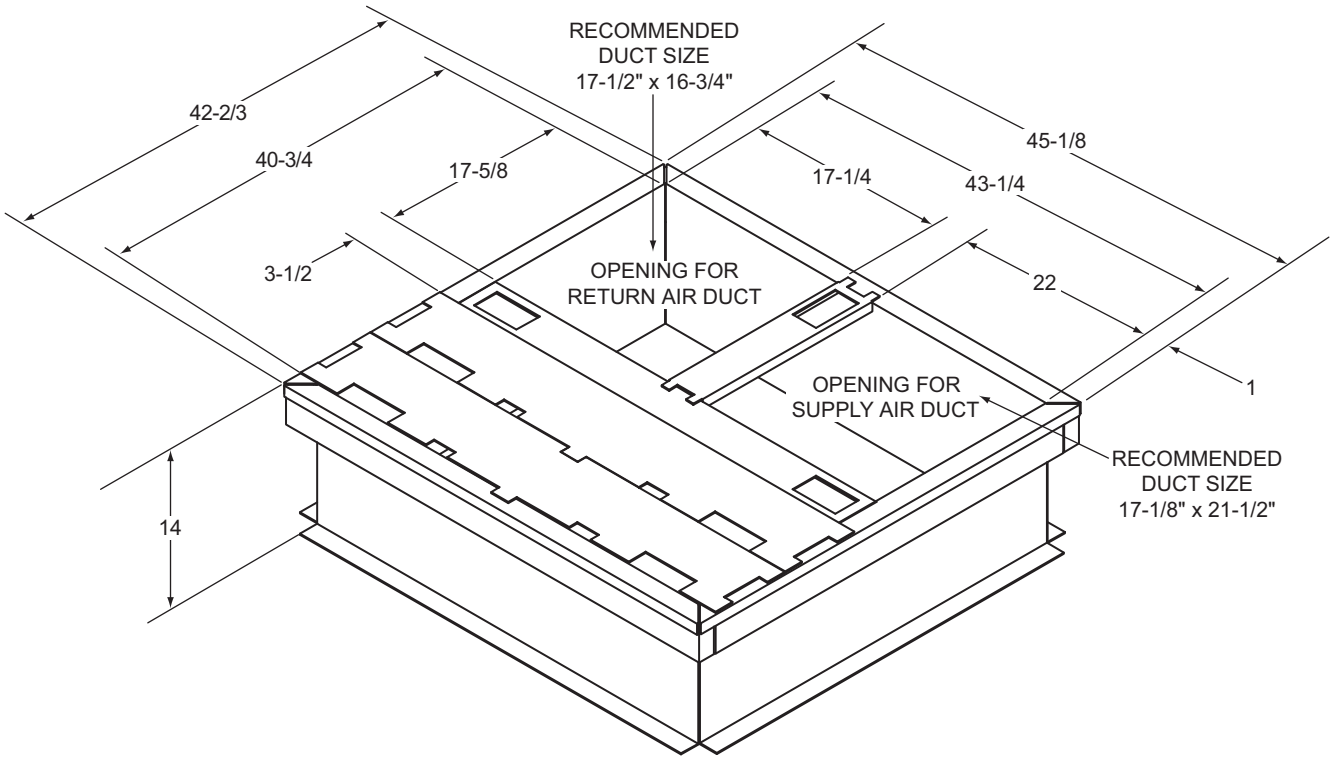


1. 8” Roof Curb also available.

**Roof Curb Cross Section**

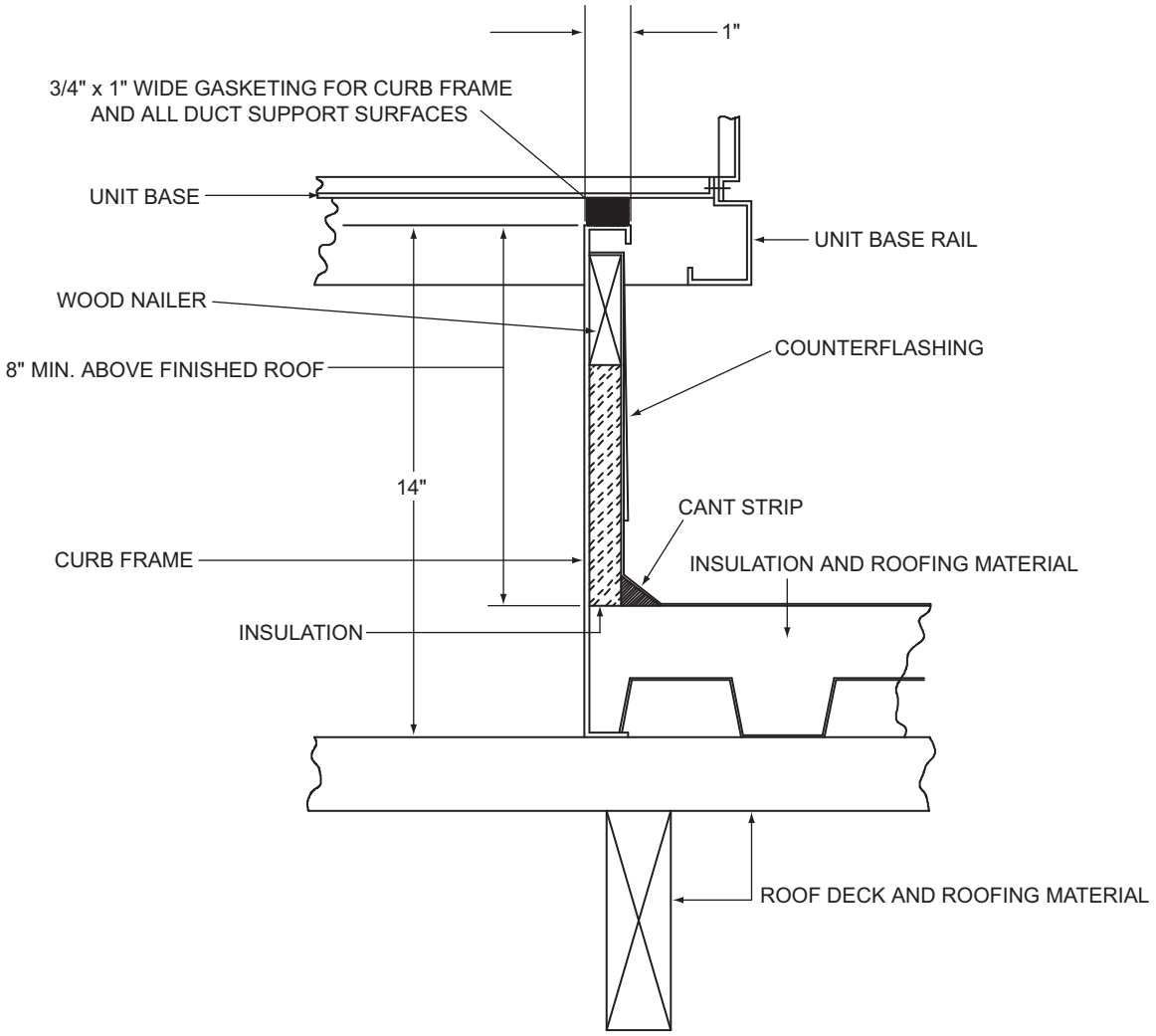


Subject to change without notice. Printed in U.S.A.
Copyright © 2013 by Johnson Controls, Inc. All rights reserved.

718434-YTG-B-0113
Supersedes: 718434-YTG-A-0811

**Johnson Controls Unitary Products**
**5005 York Drive**
**Norman, OK 73069**