YORK®
Heating and Air Conditioning

TECHNICAL GUIDE
R-410A
AFFINITY™ SERIES
DNZ MODELS
2 - 5 TON
60 Hertz

Description

These York® Affinity™ packaged cooling/heating air conditioners are designed for outdoor installation. Only utility and duct connections are required at the point of installation.

The single or two stage gas-fired heaters have aluminized steel tubular heat exchangers and spark to pilot ignition. They are available in natural gas with field conversion to propane.

Tested in accordance with:

DESIGN CERTIFIED

C US

EFFICIENCY RATING CERTIFIED Gama

AHRI CERTIFIED™ www.ahridirectory.org Unitary Small AC AHRI Standard 210/240 Certification applies only when the complete system is listed with AHRI.

CERTIFIED

ISO 9000 REGISGRATION ISO 9001 Certified Quality Management System

FOR DISTRIBUTION USE ONLY - NOT TO BE USED AT POINT OF RETAIL SALE

Table of Contents

Description 1
Table of Contents 2
Component Location 2
Nomenclature 3
Features and Benefits 3
Guide Specifications 5
Physical Data 7
Capacity Performance 10
Airflow Performance 23
Sound Performance 25
Electrical Data 26
Typical DNZ024-060 Wiring Diagrams 27
Weights and Dimensions 31

Component Location

Cooling/Gas Unit

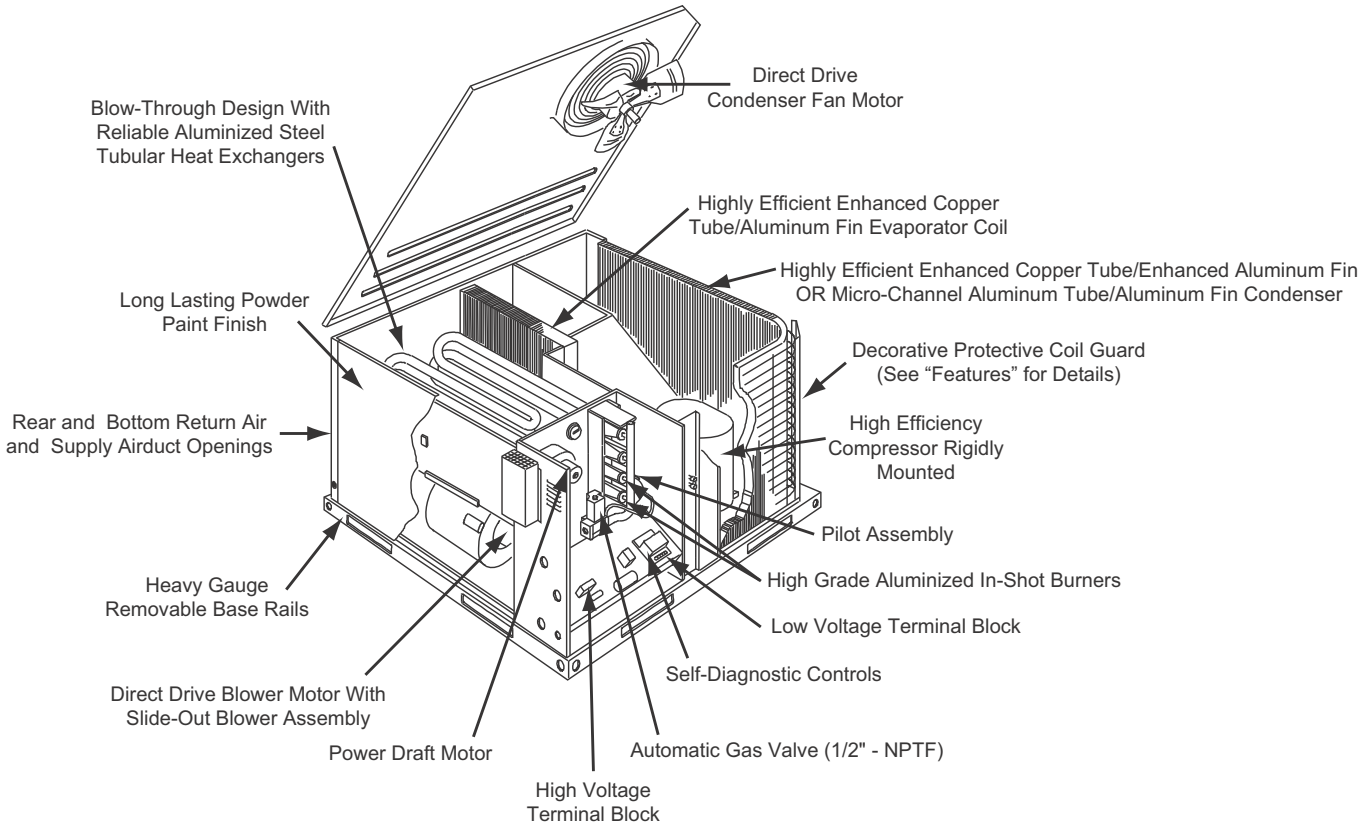

Nomenclature

Cooling/Gas Unit

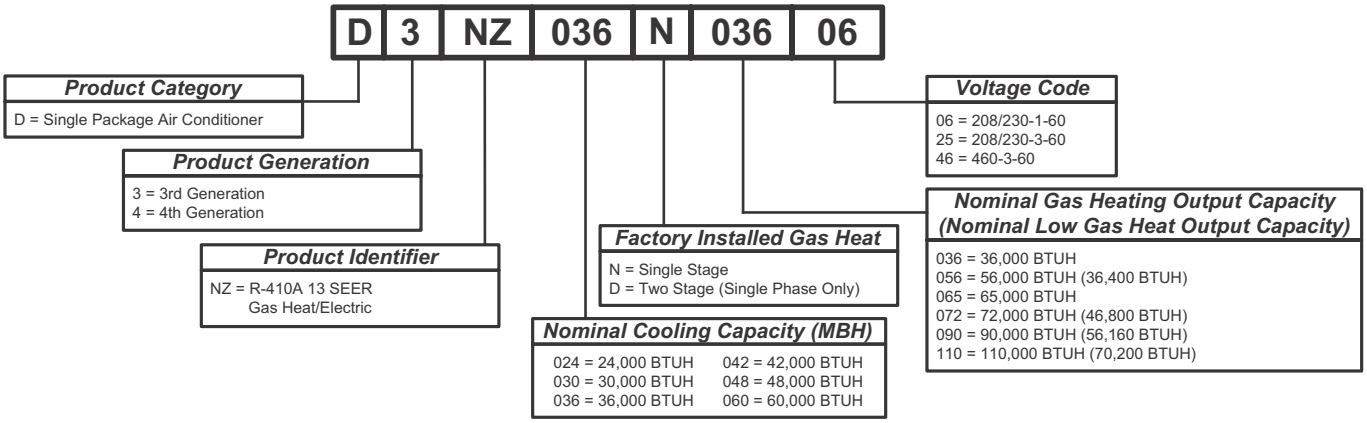

Features and Benefits

Standard Features

- **Operating Efficiency** - All gas units provide a minimum AFUE of 80% and SEERS of 13.0. All efficiencies exceed legislated minimum levels.
- **On Site Flexibility** - All model sizes share a common, compact design cabinet in a single footprint. The installer has the flexibility of setting one curb and placing the proper tonnage unit on that curb after the internal load has been determined. Field convertible duct connections from side shot to down shot allows the installer to have greater flexibility with less inventory.
- **Lower Installation Cost** - Installation time and costs are reduced by easy power and control wiring connections. The small base dimension means less space is required on the ground or roof, plus, the installer can fit this unit between the wheel wells of full size pick-up truck.

  All units are completely wired, charged with R-410A and tested prior to shipment. Unique test stations using a new state of the art computerized process system are used to insure product quality. Refrigerant charge and component part numbers are verified via computers at assembly. Vital run test statistics such as system pressure, motor currents, air velocity and temperature, unit vibration, and gas system safeties are monitored and recorded by the system to insure unit performance.

  Equal size, side supply and return duct connections allows easy hook-up of ducts to match low crawl spaces without transition pieces.
- **Utility Connections Made Easy** - Gas and electric utility knockouts are provided through the bottom as well as the side of the unit. Utility connections can be made quickly and with a minimum amount of field labor. A field supplied and field installed electrical disconnect switch must be installed.
- **Convertible Airflow Design** - The bottom duct openings are covered when they leave the factory ready to be used for a side supply/side return application. If a bottom supply/bottom return application is desired, you simply remove the two panels from the bottom of the unit and place them in the side supply/side return duct openings. No panel cutting is required and no accessory panel is necessary. Convertible airflow design allows maximum field flexibility and minimum inventory.
- **Condensate Pan** - A non-corrosive, long-lasting, water-tight pan is positioned below the evaporator coil to collect and drain all condensate. Less collection of stagnate condensate will build-up. The condensate pan conforms to ASHRAE 62-89 standards (Ventilation for Acceptable Indoor Air Quality).
- **Condensate Drain** - The 3/4 inch NPTF connection is rigidly mounted to assure proper fit and leak tight seal.
- **Durable Finish** - The cabinet is made of pre-painted steel. The pre-treated galvanized steel provides a better paint to steel bond, which resists corrosion and rust creep. Special primer formulas and matted-textured finish insure less fading when exposed to sunlight.
- **Full Perimeter Base Rails** - The easily removable base rails provide a solid foundation for the entire unit and protects the unit during shipment. The rails provide fork lift access from all sides, and rigging holes are also provided so that an overhead crane can be used to place the units on a roof. On applications where the unit is placed on a pad, the base will keep the unit off the pad to deter corrosion. On applications where height is limited, the inch high base rails may be removed on location.
- **More Attractive Appearance** - A single piece Water Shed top cover containing a top discharge condenser fan arrangement requires less square footage on installation and provides a wider variety of installations. The one piece design adds greater water integrity. Rounded corners with water drip edges add to the attractive appearance. The cabinet panels have a non-fibrous insulation that will not release insulation fibers into conditioned area.

- **Top Discharge** - The top discharge condenser fan does not disrupt neighboring areas or dry-out vegetation surrounding the unit. The warm air from the top mounted fan is blown up away from the structure and any landscaping. This allows compact location on multi-unit applications.
- **Condenser Coil Grille** - All models utilize a decorative “Wire Form” coil guard to provide impact protection against large objects.
- **Low Operating Sound Level** - The upward air flow carries the normal operating noise up and away from the living area. The rigid top panel effectively isolates any motor sound. Isolator mounted compressor and the rippled fins of the condenser coil muffle the normal fan motor and compressor operating sounds. The unique formed base pan also aids in sound alterations with it's Super-Structure design. This design strategically places embossments in the pan for optimum strength and rigidity.
- **Fan System** - All models operate over a wide range of design conditions with an electrically commutated fan motor. These units easily match all types of applications and provide greater on site flexibility to match comfort requirement. The cooling speed is factory set and can be field adjusted to a second speed. The heating speed is factory set to maintain mid point rise at the units heating input, but can be field adjusted. This allows maximum comfort conditions.
- **Simple Control Circuit** - A low voltage printed circuit board contains a diagnostic indicator light and a low voltage terminal strip. An additional set of pin connectors is also provided to simplify the field interface of external controls. Mate-n-lock plug connectors are used. The electrical control box is not located in the compressor compartment. The controls are mounted on a Control-Tilt control panel to allow the access cover to be removed for trouble shooting and maintenance without affecting the normal system operating pressures. All wiring internal to the unit is color/number coded.
- **Protected Compressor** - The compressor is internally protected against high pressure and temperature. This is accomplished by the simultaneous operation of high pressure relief valve and a temperature sensor which protect the compressor if undesirable operating conditions occur.
- **Pressure Switches** - High pressure and low pressure/ loss of charge switches standard in all units. When abnormal conditions are sensed through the pressure switches, the unit will lock out preventing any further operation until reset or problem is corrected.
- **Exclusive Coil Design** - Grooved copper tubes and enhanced aluminum fin construction improves heat transfer for maximum efficiency and durability or Micro-Channel aluminum tube, aluminum fin for long lasting durability and efficient operation.
- **Heat Exchangers** - Are corrosion-resistant, aluminized-steel tubular construction to provide long-life, trouble-free operation. The unique blow-through design also assures that condensate does not collect in humid areas when in the cooling cycle. This adds to longer heat exchanger life and higher long term efficiencies.
- **Post Purge Induced Draft Combustion** - Exhausts combustion products from the heat exchanger upon completion of the heating cycle to prolong the heat exchanger life.
- **Self Diagnostic Fan Control Module** - Due to this self diagnostic control, less on site time is required to trouble shoot these units.
- **Spark To Pilot Ignition** - Provides faster heat delivery. This ignition is highly reliable, durable and eliminates nuisance lockouts.
- **Multi Port In-shot Burners** - No field adjustment is required to mix the air and gas. These burners are constructed of high-grade corrosion-resistant, aluminized-steel.
- **Low Maintenance** - Long life, permanently lubricated condenser and evaporator fan motor bearings need no annual maintenance adding greater reliability to the unit. Blower assembly can be easily cleaned by the unique Slip- Track slide-out blower assembly.
- **Secured Service Access Ports** - Protected, externally mounted, re-usable service access ports are provided on both the high and low lines for ease of evacuating and charging the system. No final field mounting required.
- **Easy Service Access** - A large, single panel covers the electrical and gas controls makes servicing easy. The blower compartment has an additional large panel with a built-in handle tab. Removing this panel will allow the blower assembly to slide-out for easy removal for maintenance and ease of trouble shooting.
- **Replacement Parts** - The installer requires no special training to replace any of the components of these units and does not need to maintain an inventory of unique parts.
- **System Integration** - Each unit has the internal ability to integrate an electronic air cleaner or humidifier to work in conjunction with the base unit.

Field Installed Accessories

- **Low NOx Kit** - Kit includes all the necessary hardware and instructions to field convert units to reduce emissions to less than 40 nanogram per Joule. California requirement on single phase models only.
- **Propane Conversion Kit** - Kit includes burner orifices, gas valve conversion and installation instructions necessary to field convert unit from natural gas to propane.
- **High Altitude Conversion Kit** (Natural Gas/Propane) - Kit includes all necessary labels and instructions to field alter units with natural gas/propane for installations above 2000 feet. Burner orifices must be obtained from Source 1 Parts. Propane Conversion Kit must be obtained separately.
- **Economizer Down Discharge/Supply Kit** - Modulating integrated economizer provides simultaneous operation between the mechanical cooling and economizer operation. Independent blade design insures proper

control and less than 1% leak rate. Includes hood and mesh bird screen filter integrated into the hood, dry bulb sensor and relief damper. Separate field accessories of single enthalpy and dual enthalpy are also available. A built-in barometric relief of 25% is provided.

- **Single Enthalpy Sensor** - Sensor replaces dry bulb sensor standard in economizer kit. Provides improved economizer operation by sensing the dry bulb temperature from outdoors plus the enthalpy content of the outdoor air.
- **Dual Enthalpy Sensor** - Additional sensor to single enthalpy sensor. Sensor senses both the return air temperature dry bulb and humidity in conjunction with the single enthalpy to determine the most economical mix. Single Enthalpy sensor also required.
- **Hail Guard Kit** - Kit contains protective grilles made of expanded aluminum with full perimeter frame. Sloped hoods are also included to assure maximum protection.
- **Anti Short Cycle Timer (DNZ Units Only)** - Automatically prevents the compressor from restarting for 5 minutes after cycled off.Not required if Thermostat 2ET07700224 and 2ET04700224 are used.
- **Filter/Frame Kit (Single Phase Only)** - Kit contains the necessary hardware to field install return air filters into the base unit. Pre-cut filter racks and appropriate cleanable standard size filters are shipped in one kit. The filter rack is suitable for either 1" or 2" filters. (1" filter is supplied) This kit is available for single phase horizontal or vertical duct application only. Standard in all 3 Phase models.
- **Motorized Fresh Air Damper** - Designed for duct mounted side supply/return and unit mounted down supply/return applications. Damper capable of providing 0% through 50% of outdoor air (field supplied). Closes on power loss, includes hood and screen assembly.
- **Rectangle To Round Adapters** - Kit includes one supply and one return air rectangle to round duct adapter. Adapters are preformed and designed to fit over current duct openings on the base unit. Transition is from side square duct opening to 14" round duct opening.
- **Roof Curbs** - NRCA approved curbs provide proper fit to base unit for rooftop installations. Curbs are designed to be assembled through hinge pins in each corner. Kit also provides seal strip to assure a water tight seal. 8 and 14 inch high roof curbs are available.
- **Manual Outdoor Damper** - Provides 0% through 50% outdoor air capability (field adjustable). Designed for duct mounted side supply/return applications. Includes hood and screen assembly.
- **Wall Thermostat** - The units are designed to operate with 24-volt electronic and electro-mechanical thermostats. All units can operate with single stage heat/single stage cool thermostats - with or without the economizer.
- **Low Ambient Kit** - Kit provides necessary hardware to convert unit to operate in cooling cycle down to 0º F. Standard unit operation 45º F.
- **Transformer Kit** - Kit provides necessary hardware to provide single phase models from factory furnished 40 VA transformer capability to 75 VA transformer capability. (Required on installations with economizer or motorized damper.)

Guide Specifications

General

Units shall be manufactured by Unitary Products in an ISO 9001 certified facility. YORK's Affinity™ package units give you the flexibility and choices you need in today's market. These packaged cooling/heating air conditioners are designed for outdoor installation. Only utility and duct connections are required at the point of installation. The single or two stage gas fired heaters have aluminized steel tubular heat exchangers and spark to pilot ignition. They are available in natural gas with field conversion to propane.

Description

Units shall be factory-assembled, single packaged, Electric Cooling/Gas Heating units, designed for outdoor mounted installation. For SEER ratings, refer to technical literature. They shall have built in, equal size, field convertible duct connections for down discharge supply/return or horizontal discharge supply/return. The units shall be factory wired, piped, charged with R-410A Refrigerant and factory tested prior to shipment. All unit wiring shall be both numbered and color coded. All units shall be manufactured in a facility certified to ISO 9001 standards, and the cooling performance shall be rated in accordance with DOE and AHRI test procedures. The heating performance shall be rated to DOE and GAMA test procedures. Units shall be CSA listed and classified to ANSI Z21.47/CAN/CSA 2.3 standards and UL 1995/CAN/CSA No. 236-M90 conditions.

Unit Cabinet

Unit cabinet shall be constructed of G-90, pre-paint textured steel, certified at 500 hours salt spray test per ASTM-B117 standards. The unit top shall be a single piece "Water Shed" design, with drip edges and no-seam corners to provide optimum water integrity. Unit shall have a rigidly mounted condenser coil guard to provide protection from objects and personnel after installation. Indoor blower section shall be insulated with up to 3/4" thick, aluminum, foil faced insulation, fastened to prevent insulation from entering the air stream. Cabinet panels shall be "large" size, easily removable for servicing and maintenance, with built-in lift handles. Unit shall be built on a formed, "Super-Structure" design base pan, with embossments at critical points to add strength, rigidity and aid in minimizing sound. Full perimeter base rails shall be provided to assure reliable transit of equipment, overhead rigging, for truck access and proper sealing on roof curb applications. Base rails shall be removable, when required, to lower unit height. Filters shall be furnished and be accessible through a removable access door, sealed airtight. Units vertical discharge and return duct configuration shall be designed to fit between

standard 24” O.C. beams without modification to building structure, duct work and base unit. Condensate pan shall be internally sloped and conform to ASHRAE 62-89 self-draining standards, with 3/4” NPTF ridged mount connection.

Indoor (Evaporator) Fan Assembly

Fan shall be direct drive design. Fan wheel shall be double-inlet type with forward-curved blades, dynamically balanced to operate smoothly throughout the entire range of operation. Airflow design shall be constant air volume. Bearings shall be sealed and permanently lubricated for longer life and no maintenance. Fan assembly shall be “Slip Track” (slide-out) design for easy removal and cleaning.

Outdoor (Condenser) Fan Assembly

The outdoor fan shall be of the direct-driven propeller type, discharge air vertically, have aluminum blades riveted to corrosion resistant steel spider bracket and shall be statically balanced for smooth operation. The outdoor fan motor shall be totally enclosed with permanently lubricated bearings and internally protected against overload conditions.

Refrigerant Components

Compressors:

a. Shall be fully hermetic type, direct drive, internally protected with internal high-pressure relief and over temperature protection. The hermetic motor shall be suction gas cooled and have a voltage range of +/- 10% of the unit nameplate voltage.

b. Shall have internal isolation and sound muffling to minimize vibration and noise, and be externally isolated on a dedicated, independent mounting.

Coils:

a. Evaporator coils shall have aluminum plate fins mechanically bonded to seamless internally enhanced copper tubes with all joints brazed.

b. Evaporator coil shall be of the direct expansion, blow through design.

c. Condenser coils shall have aluminum plate fins mechanically bonded to seamless internally enhanced copper tubes with all joints brazed or Mircro-Channel aluminum tube, aluminum fins.

d. Condenser coil shall be draw through design.

Refrigerant Circuit and Refrigerant Safety Components shall include:

a. Independent fixed orifice expansion devices.

b. Filter/strainer to eliminate any foreign matter.

Gas Heating Section (If Equipped)

Heat exchanger and exhaust system shall be constructed of aluminized steel and shall be designed with induced draft combustion with post purge logic and redundant main gas valve. The heat exchanger shall be of the tubular type, constructed of T1-40 aluminized steel for corrosion resistance and allowing minimum mixed air entering temperature of 40 ºF. Burners shall be of the in-shot type, constructed of aluminum-coated steel. All gas piping shall enter the unit cabinet at a single location through either the side or bottom, without any field modifications. An integrated control board shall provide timed control of evaporator fan functioning and burner ignition. Heating section shall be provided with the following minimum protection:

a. Primary and auxiliary high-temperature limit switches.

b. Induced draft pressure sensor.

c. Flame roll out switch (manual reset).

d. Flame proving controls.

Physical Data

DNZ024-060 Single Stage Gas Heat

Component	Models														
	DNZ024		DNZ030		DNZ036			DNZ042		DNZ048			DNZ060		
Nominal Tonnage	**2.0**		**2.5**		**3.0**			**3.5**		**4.0**			**5.0**		
AHRI COOLING PERFORMANCE															
Gross Capacity @ AHRI A point (MBh)	24.7		30.8		35.6			43.0		50.0			59.5		
AHRI net capacity (MBh)	24.0		30.0		34.2			41.5		48.0			57.5		
EER	11.6		11.5		11.1			11.6		11.1			10.9		
SEER	13.2		13.2		13.2			13.4		13.4			13.0		
Nominal CFM	850		940		1200			1300		1540			1600		
System power (KW)	2.1		2.7		3.2			3.6		4.4			5.3		
Refrigerant type	R-410A		R-410A		R-410A			R-410A		R-410A			R-410A		
Refrigerant charge (lb-oz)	3-10		4-0		4-0			4-14		4-4			5-2		
AHRI HEATING PERFORMANCE															
Heating model	N036	N056	N036	N056	N036	N056	N072	N065	N090	N065	N090	N110	N065	N090	N110
Heat input (K Btu)	45	70	45	70	45	70	90	80	108	80	108	135	80	108	135
Heat output (K Btu)	36	56	36	56	36	56	72	64	87	64	87	108	64	87	107
AFUE %	80.0	80.0	80.0	80.0	80.0	80.0	80.0	80.0	80.0	80.0	80.0	80.0	80.0	80.0	80.0
Steady state efficiency (%)	80	80	80	80	80	80	80	80	80	80	80	80	80	80	80
No. burners	2	3	2	3	2	3	4	3	4	3	4	5	3	4	5
No. stages	1	1	1	1	1	1	1	1	1	1	1	1	1	1	1
Temperature Rise Range (ºF)	25-55	30-60	25-55	30-60	25-55	25-55	30-60	25-55	45-75	25-55	35-65	45-75	25-55	35-65	45-75
Gas Limit Setting (ºF)	140	160	140	160	140	160	160	150	175	150	175	160	150	175	160
Gas piping connection (in.)	1/2		1/2		1/2			1/2		1/2			1/2		
DIMENSIONS (inches)															
Length	49 1/8		49 1/8		49 1/8			49 1/8		49 1/8			49 1/8		
Width	47 1/4		47 1/4		47 1/4			47 1/4		47 1/4			47 1/4		
Height	33 1/2		33 1/2		33 1/2			41 1/2		41 1/2			41 1/2		
OPERATING WT. (lbs.)	378		398		402			460		465			480		
COMPRESSORS															
Type	Recip 1-spd		Recip 1-spd		Recip 1-spd			Recip 1-spd		Scroll 1-spd			Scroll 1-spd		
Quantity	1		1		1			1		1			1		
CONDENSER COIL DATA															
Face area (Sq. Ft.)	11.9		11.9		11.9			15		15			15		
Rows	1		1		1			1		1			1		
Fins per inch	23		23		23			23		23			23		
Tube diameter (in.)	0.71/18		0.71/18		0.71/18			0.71/18		0.71/18			0.71/18		
Circuitry Type	2-pass Micro-Channel														
EVAPORATOR COIL DATA															
Face area (Sq. Ft.)	3.4		3.4		3.4			4.4		4.4			4.4		
Rows	2		3		3			3		3			4		
Fins per inch	15		13		13			16		16			13		
Tube diameter	3/8		3/8		3/8			3/8		3/8			3/8		
Circuitry Type	Interlaced		Interlaced		Interlaced			Interlaced		Interlaced			Interlaced		
Refrigerant control	Orifice		Orifice		Orifice			Orifice		TXV			TXV		
CONDENSER FAN DATA															
Quantity	1		1		1			1		1			1		
Fan diameter (Inch)	22		22		22			22		22			22		
Type	Prop		Prop		Prop			Prop		Prop			Prop		
Drive type	Direct		Direct		Direct			Direct		Direct			Direct		
No. speeds	1		1		1			1		1			1		
Number of motors	1		1		1			1		1			1		
Motor HP each	1/4		1/4		1/4			1/3		1/3			1/2		
RPM	1100		1100		1100			1120		1120			1090		
Nominal total CFM	2400		2400		2400			3200		3200			3200		
DIRECT DRIVE EVAP FAN DATA															
Quantity	1		1		1			1		1			1		
Fan Size (Inch)	10 x 8		10 x 8		11 x 10			11 x 10		11 x 10			11 x 10		
Type	Centrifugal		Centrifugal		Centrifugal			Centrifugal		Centrifugal			Centrifugal		
Motor HP each	1/2		3/4		3/4			3/4		1			1		
RPM	Variable		Variable		Variable			Variable		Variable			Variable		
Frame size	48		48		48			48		48			48		
FILTERS															
Quantity - Size	1 - 20 x 20 x 1		1 - 20 x 20 x 1		1 - 20 x 20 x 1			2 - 20 x 12 x 1		2 - 20 x 12 x 1			2 - 20 x 12 x 1		

DNZ024-060 Two Stage Gas Heat

Component	Models								
	DNZ024	DNZ030	DNZ036		DNZ042	DNZ048		DNZ060	
Nominal Tonnage	**2.0**	**2.5**	**3.0**		**3.5**	**4.0**		**5.0**	
AHRI COOLING PERFORMANCE									
Gross Capacity @ AHRI A point (MBh)	24.7	30.8	35.6		43.0	50.0		59.5	
AHRI net capacity (MBh)	24.0	30.0	34.2		41.5	48.0		57.5	
EER	11.6	11.5	11.1		11.6	11.6		10.9	
SEER	13.2	13.2	13.2		13.4	13.4		13.0	
Nominal CFM	850	940	1200		1300	1540		1600	
System power (KW)	2.1	2.7	3.2		3.6	4.4		5.3	
Refrigerant type	R-410A	R-410A	R-410A		R-410A	R-410A		R-410A	
Refrigerant charge (lb-oz)	3-10	4-0	4-0		4-14	4-4		5-2	
AHRI HEATING PERFORMANCE									
Heating model	D056	D056	D056	D072	D090	D090	D110	D090	D110
Heat input (K Btu)	70/45.5	70/45.5	70/45.5	90/58.5	108/70.2	108/70.2	135/87.8	108/70.2	135/87.8
Heat output (K Btu)	56/36.4	56/36.4	56/36.4	72/46.8	87/56.2	87/56.2	108/70.2	87/56.2	108/70.2
AFUE %	80.0	80.0	80.0	80.0	80.0	80.0	80.0	80.0	80.0
Steady state efficiency (%)	80	80	80	80	80	80	80	80	80
No. burners	3	3	3	4	4	4	5	4	5
No. stages	2	2	2	2	2	2	2	2	2
Temperature Rise Range (ºF)	30-60	30-60	25-55	30-60	45-75	35-65	45-75	35-65	45-75
Gas Limit Setting (ºF)	160	160	160	160	175	175	170	175	170
Gas piping connection (in.)	1/2	1/2	1/2		1/2	1/2		1/2	
DIMENSIONS (inches)									
Length	49 1/8	49 1/8	49 1/8		49 1/8	49 1/8		49 1/8	
Width	47 1/4	47 1/4	47 1/4		47 1/4	47 1/4		47 1/4	
Height	33 1/2	33 1/2	33 1/2		41 1/2	41 1/2		41 1/2	
OPERATING WT. (lbs.)	378	398	402		460	465		480	
COMPRESSORS									
Type	Recip 1-spd	Recip 1-spd	Recip 1-spd		Recip 1-spd	Scroll 1-spd		Scroll 1-spd	
Quantity	1	1	1		1	1		1	
CONDENSER COIL DATA									
Face area (Sq. Ft.)	11.9	11.9	11.9		15	15		15	
Rows	1	1	1		1	1		1	
Fins per inch	23	23	23		23	23		23	
Tube diameter (in.)	0.71/18	0.71/18	0.71/18		0.71/18	0.71/18		0.71/18	
Circuitry Type	2-pass Micro-Channel								
EVAPORATOR COIL DATA									
Face area (Sq. Ft.)	3.4	3.4	3.4		4.4	4.4		4.4	
Rows	2	3	3		3	3		4	
Fins per inch	15	13	13		16	16		13	
Tube diameter	3/8	3/8	3/8		3/8	3/8		3/8	
Circuitry Type	Interlaced	Interlaced	Interlaced		Interlaced	Interlaced		Interlaced	
Refrigerant control	Orifice	Orifice	Orifice		Orifice	TXV		TXV	
CONDENSER FAN DATA									
Quantity	1	1	1		1	1		1	
Fan diameter (Inch)	22	22	22		22	22		22	
Type	Prop	Prop	Prop		Prop	Prop		Prop	
Drive type	Direct	Direct	Direct		Direct	Direct		Direct	
No. speeds	1	1	1		1	1		1	
Number of motors	1	1	1		1	1		1	
Motor HP each	1/4	1/4	1/4		1/3	1/3		1/2	
RPM	1100	1100	1100		1100	1100		1090	
Nominal total CFM	2400	2400	2400		3200	3200		3200	
DIRECT DRIVE EVAP FAN DATA									
Quantity	1	1	1		1	1		1	
Fan Size (Inch)	10 x 8	10 x 8	11 x 10		11 x 10	11 x 10		11 x 10	
Type	Centrifugal	Centrifugal	Centrifugal		Centrifugal	Centrifugal		Centrifugal	
Motor HP each	1/2	3/4	3/4		3/4	1		1	
RPM	Variable	Variable	Variable		Variable	Variable		Variable	
Frame size	48	48	48		48	48		48	
FILTERS									
Quantity - Size	1 - 20 x 20 x 1	1 - 20 x 20 x 1	1 - 20 x 20 x 1		2 - 20 x 12 x 1	2 - 20 x 12 x 1		2 - 20 x 12 x 1	

DNZ Unit Limitations

Size (Tons)	Model	Unit Voltage	Unit Limitations		
			Applied Voltage		Outdoor DB Temp
			Min	Max	Max (°F)
024 (2.0)	DNZ	208/230-1-60	187	252	125
030 (2.5)	DNZ	208/230-1-60	187	252	125
		208/230-3-60	187	252	125
		460-3-60	432	504	125
036 (3.0)	DNZ	208/230-1-60	187	252	125
		208/230-3-60	187	252	125
		460-3-60	432	504	125
042 (3.5)	DNZ	208/230-1-60	187	252	125
		208/230-3-60	187	252	125
		460-3-60	432	504	125
048 (4.0)	DNZ	208/230-1-60	187	252	115
		208/230-3-60	187	252	115
		460-3-60	432	504	115
060 (5.0)	DNZ	208/230-1-60	187	252	115
		208/230-3-60	187	252	115
		460-3-60	432	504	115

Capacity Performance

DNZ024-060 Cooling Capacities

DNZ024 (2.0 Ton)

Air on Evaporator Coil		Temperature of Air on Condenser Coil															
		Net Capacity[1] (MBh)	Total Input (kW)[2]	Sensible Capacity (MBh) Return Dry Bulb (°F)						Net Capacity[1] (MBh)	Total Input (kW)[2]	Sensible Capacity (MBh) Return Dry Bulb (°F)					
CFM	WB (°F)			90	85	80	75	70	65			90	85	80	75	70	65
		75°F								85°F							
500	77	29.9	1.6	4.7	4.0	2.1	-	-	-	26.9	1.8	9.1	7.4	5.3	-	-	-
	72	28.3	1.6	11.7	9.7	7.7	5.8	-	-	25.4	1.8	13.6	11.6	9.5	7.5	-	-
	67	26.6	1.6	17.9	15.4	13.4	11.4	9.5	-	23.8	1.7	18.0	15.7	13.7	11.7	9.7	-
	62	25.0	1.6	23.8	16.8	12.3	10.3	8.3	6.3	21.7	1.7	21.1	17.6	14.8	12.8	10.8	8.7
600	77	30.2	1.6	7.8	5.5	3.2	-	-	-	27.7	1.8	10.9	8.6	6.2	-	-	-
	72	28.5	1.6	14.7	12.4	10.1	7.9	-	-	26.1	1.8	15.8	13.5	11.2	8.8	-	-
	67	26.9	1.6	21.6	19.3	17.0	14.8	12.5	-	24.6	1.8	20.7	18.4	16.1	13.7	11.4	-
	62	25.3	1.6	24.5	19.9	16.0	13.8	11.5	9.2	22.4	1.7	22.0	19.7	17.4	15.0	12.7	10.4
	57	26.4	1.6	26.4	22.0	18.2	15.9	13.7	11.4	23.7	1.7	23.7	21.5	19.2	16.8	14.5	12.2
700	77	30.5	1.6	10.8	7.0	4.4	-	-	-	28.5	1.8	12.6	9.8	7.2	-	-	-
	72	28.8	1.6	17.6	15.1	12.5	10.0	-	-	26.9	1.8	18.0	15.4	12.8	10.2	-	-
	67	27.2	1.6	25.2	23.2	20.7	18.1	15.6	-	25.3	1.8	23.3	21.0	18.4	15.8	13.2	-
	62	25.6	1.6	25.2	22.9	19.8	17.2	14.7	12.1	23.1	1.7	22.9	21.7	19.9	17.3	14.7	12.1
	57	26.7	1.6	26.7	24.5	22.4	19.8	17.3	14.7	24.4	1.7	24.4	23.3	21.9	19.3	16.7	14.1
800	77	30.8	1.6	13.8	8.4	5.6	-	-	-	29.3	1.8	14.4	11.0	8.1	-	-	-
	72	29.1	1.6	20.6	17.8	14.9	12.1	-	-	27.7	1.8	20.2	17.3	14.4	11.5	-	-
	67	27.4	1.6	27.4	27.1	24.3	21.5	18.6	-	26.0	1.8	26.0	23.6	20.8	17.9	15.0	-
	62	25.9	1.6	25.9	25.9	23.5	20.7	17.9	15.0	23.7	1.7	23.7	23.7	22.4	19.5	16.6	13.7
	57	27.0	1.6	27.0	27.0	26.6	23.7	20.9	18.1	25.1	1.8	25.1	25.1	24.7	21.8	19.0	16.1
900	72	30.0	1.6	20.4	17.1	13.8	10.5	-	-	28.0	1.8	20.9	17.7	14.4	11.2	-	-
	67	28.2	1.6	28.2	26.2	22.9	19.5	16.2	-	26.4	1.8	26.4	24.0	20.8	17.5	14.2	-
	62	26.6	1.6	26.6	26.6	23.5	20.2	16.9	13.6	24.0	1.7	24.0	24.0	22.4	19.2	15.9	12.7
	57	27.8	1.6	27.8	27.8	26.5	23.2	19.9	16.6	25.4	1.8	25.4	25.4	24.7	21.5	18.2	15.0
1000	72	30.8	1.6	20.1	16.4	12.6	8.8	-	-	28.4	1.8	21.6	18.0	14.4	10.8	-	-
	67	29.0	1.6	29.0	25.2	21.4	17.6	13.9	-	26.7	1.8	26.7	24.4	20.8	17.1	13.5	-
	62	27.3	1.6	27.3	27.3	23.4	19.6	15.9	12.1	24.4	1.7	24.4	24.4	22.4	18.8	15.2	11.6
	57	28.5	1.6	28.5	28.5	26.4	22.7	18.9	15.1	25.8	1.8	25.8	25.8	24.7	21.1	17.5	13.9

DNZ024 (2.0 Ton) (Continued)

Air on Evaporator Coil		Temperature of Air on Condenser Coil															
		Net Capacity[1] (MBh)	Total Input (kW)[2]	Sensible Capacity (MBh) Return Dry Bulb (°F)						Net Capacity[1] (MBh)	Total Input (kW)[2]	Sensible Capacity (MBh) Return Dry Bulb (°F)					
CFM	WB (°F)			90	85	80	75	70	65			90	85	80	75	70	65
		95°F								**105°F**							
500	77	23.9	2.0	12.8	10.7	8.6	-	-	-	22.8	2.1	11.4	9.3	7.4	-	-	-
	72	22.5	1.9	15.5	13.4	11.3	9.2	-	-	20.8	2.1	14.3	12.2	10.2	8.1	-	-
	67	21.1	1.9	18.2	16.1	14.0	11.9	9.9	-	18.7	2.0	17.3	15.2	12.9	10.8	8.7	-
	62	18.5	1.9	18.5	18.5	17.4	15.3	13.2	11.1	17.0	2.0	17.0	17.0	15.1	13.0	11.0	8.9
600	77	25.2	2.0	14.0	11.6	9.3	-	-	-	24.0	2.1	13.5	10.5	8.1	-	-	-
	72	23.7	1.9	16.9	14.5	12.2	9.8	-	-	21.8	2.1	16.0	13.5	11.1	8.7	-	-
	67	22.3	1.9	19.8	17.5	15.1	12.7	10.3	-	19.7	2.0	18.4	16.5	14.1	11.7	9.3	-
	62	19.5	1.9	19.5	19.5	18.7	16.3	13.9	11.6	17.8	2.0	17.8	17.8	16.6	14.1	11.7	9.3
	57	21.0	1.9	21.0	21.0	20.1	17.7	15.4	13.0	19.1	2.0	19.1	19.1	17.7	15.2	12.8	10.4
700	77	26.5	2.0	15.2	12.6	9.9	-	-	-	25.1	2.1	15.6	11.8	8.8	-	-	-
	72	24.9	1.9	18.3	15.7	13.0	10.4	-	-	22.9	2.1	17.6	14.8	12.1	9.4	-	-
	67	23.4	1.9	21.5	18.8	16.1	13.5	10.8	-	20.6	2.0	19.6	17.9	15.4	12.6	9.9	-
	62	20.5	1.9	20.5	20.5	20.0	17.3	14.7	12.0	18.7	2.0	18.7	18.7	18.0	15.2	12.5	9.8
	57	22.1	1.9	22.1	22.1	21.5	18.8	16.2	13.5	20.0	2.0	20.0	20.0	19.2	16.4	13.7	10.9
800	77	27.8	2.0	16.4	13.5	10.6	-	-	-	26.3	2.1	17.7	13.0	9.5	-	-	-
	72	26.2	1.9	19.8	16.8	13.9	10.9	-	-	23.9	2.1	19.2	16.2	13.1	10.0	-	-
	67	24.6	1.9	23.1	20.1	17.2	14.3	11.3	-	21.5	2.1	20.8	19.3	16.6	13.5	10.5	-
	62	21.5	1.9	21.5	21.5	21.3	18.4	15.4	12.5	19.5	2.0	19.5	19.5	19.4	16.4	13.3	10.2
	57	23.2	1.9	23.2	23.2	22.9	20.0	17.0	14.1	21.0	2.0	21.0	21.0	20.7	17.6	14.5	11.5
900	72	26.1	2.0	21.5	18.3	15.0	11.8	-	-	24.0	2.1	20.7	17.4	14.0	10.7	-	-
	67	24.5	1.9	23.8	21.9	18.7	15.4	12.2	-	21.7	2.1	21.3	20.3	17.8	14.5	11.2	-
	62	21.5	1.9	21.5	21.5	21.4	18.2	14.9	11.7	19.7	2.0	19.7	19.7	19.6	16.3	12.9	9.6
	57	23.1	1.9	23.1	23.1	23.0	19.8	16.6	13.4	21.1	2.1	21.1	21.1	21.0	17.6	14.3	11.0
1000	72	26.1	2.0	23.2	19.7	16.2	12.8	-	-	24.2	2.1	22.2	18.6	15.0	11.4	-	-
	67	24.5	1.9	24.5	23.6	20.1	16.6	13.2	-	21.8	2.1	21.8	21.3	19.1	15.5	11.9	-
	62	21.4	1.9	21.4	21.4	21.4	18.0	14.5	11.0	19.8	2.1	19.8	19.8	19.8	16.2	12.6	9.0
	57	23.1	1.9	23.1	23.1	23.1	19.6	16.1	12.7	21.2	2.1	21.2	21.2	21.2	17.6	14.0	10.4

DNZ024 (2.0 Ton) (Continued)

Air on Evaporator Coil		Temperature of Air on Condenser Coil															
		Net Capacity[1] (MBh)	Total Input (kW)[2]	Sensible Capacity (MBh) Return Dry Bulb (°F)						Net Capacity[1] (MBh)	Total Input (kW)[2]	Sensible Capacity (MBh) Return Dry Bulb (°F)					
CFM	WB (°F)			90	85	80	75	70	65			90	85	80	75	70	65
		115°F								**125°F**							
500	77	21.8	2.3	10.0	7.9	6.2	-	-	-	20.8	2.4	10.0	5.9	5.1	-	-	-
	72	19.1	2.2	13.2	11.1	9.0	6.9	-	-	17.4	2.4	12.0	9.9	7.8	5.8	-	-
	67	16.3	2.2	16.3	14.2	11.8	9.7	7.6	-	14.0	2.3	14.0	14.0	10.6	8.5	6.5	-
	62	15.5	2.2	15.5	15.5	12.9	10.8	8.7	6.6	14.0	2.3	14.0	14.0	10.6	8.5	6.5	4.4
600	77	22.8	2.3	13.0	9.5	7.0	-	-	-	21.6	2.4	13.7	8.6	5.9	-	-	-
	72	19.9	2.2	15.0	12.5	10.1	7.6	-	-	18.0	2.4	14.1	11.6	9.1	6.5	-	-
	67	17.1	2.2	17.1	15.6	13.2	10.7	8.3	-	14.5	2.3	14.5	14.5	12.2	9.7	7.2	-
	62	16.2	2.2	16.2	16.2	14.4	12.0	9.5	7.1	14.6	2.3	14.6	14.6	12.3	9.8	7.3	4.8
	57	17.3	2.2	17.3	17.3	15.2	12.8	10.3	7.8	15.5	2.3	15.5	15.5	12.8	10.3	7.8	5.3
700	77	23.8	2.3	15.9	11.0	7.8	-	-	-	22.4	2.5	17.3	11.4	6.7	-	-	-
	72	20.8	2.2	16.9	14.0	11.2	8.3	-	-	18.7	2.4	16.1	13.2	10.3	7.3	-	-
	67	17.8	2.2	17.8	17.1	14.6	11.8	8.9	-	15.0	2.3	15.0	15.0	13.8	10.9	8.0	-
	62	16.9	2.2	16.9	16.9	16.0	13.2	10.3	7.5	15.1	2.3	15.1	15.1	14.0	11.1	8.2	5.2
	57	18.0	2.2	18.0	18.0	16.9	14.0	11.2	8.4	16.0	2.3	16.0	16.0	14.5	11.6	8.7	5.8
800	77	24.7	2.3	18.9	12.5	8.5	-	-	-	23.2	2.5	20.9	14.2	7.5	-	-	-
	72	21.6	2.3	18.7	15.5	12.3	9.1	-	-	19.3	2.4	18.2	14.8	11.5	8.1	-	-
	67	18.5	2.2	18.5	18.5	16.0	12.8	9.6	-	15.5	2.3	15.5	15.5	15.5	12.1	8.8	-
	62	17.6	2.2	17.6	17.6	17.6	14.3	11.1	7.9	15.6	2.3	15.6	15.6	15.6	12.3	9.0	5.6
	57	18.8	2.2	18.8	18.8	18.5	15.3	12.1	8.9	16.5	2.4	16.5	16.5	16.3	13.0	9.6	6.3
900	72	22.0	2.3	20.0	16.5	13.0	9.6	-	-	19.9	2.4	19.2	15.6	12.0	8.4	-	-
	67	18.8	2.2	18.8	18.8	17.0	13.6	10.1	-	15.9	2.4	15.9	15.9	15.9	12.6	9.0	-
	62	17.8	2.2	17.8	17.8	17.8	14.4	10.9	7.5	16.0	2.3	16.0	16.0	16.0	12.5	8.9	5.3
	57	19.1	2.2	19.1	19.1	18.9	15.5	12.0	8.5	17.0	2.4	17.0	17.0	16.9	13.3	9.7	6.1
1000	72	22.3	2.3	21.2	17.5	13.8	10.1	-	-	20.4	2.4	20.3	16.4	12.6	8.8	-	-
	67	19.1	2.2	19.1	19.1	18.0	14.3	10.6	-	16.4	2.4	16.4	16.4	16.4	13.2	9.3	-
	62	18.1	2.2	18.1	18.1	18.1	14.4	10.7	7.0	16.5	2.4	16.5	16.5	16.5	12.7	8.8	5.0
	57	19.4	2.2	19.4	19.4	19.4	15.7	11.9	8.2	17.5	2.4	17.5	17.5	17.5	13.7	9.9	6.0

1. These capacities are Net Capacities.
2. These ratings include the compressor, condenser fan and supply air blower motors.

DNZ030 (2.5 Ton)

Air on Evaporator Coil		Temperature of Air on Condenser Coil															
		Net Capacity[1] (MBh)	Total Input (kW)[2]	Sensible Capacity (MBh) Return Dry Bulb (°F)						Net Capacity[1] (MBh)	Total Input (kW)[2]	Sensible Capacity (MBh) Return Dry Bulb (°F)					
CFM	WB (°F)			90	85	80	75	70	65			90	85	80	75	70	65
		75°F								**85°F**							
850	77	35.3	2.1	15.9	12.6	9.3	-	-	-	33.9	2.3	16.5	13.1	9.7	-	-	-
	72	33.5	2.1	20.8	17.5	14.2	10.8	-	-	31.7	2.3	20.8	17.5	14.1	10.7	-	-
	67	31.6	2.1	25.7	22.4	19.0	15.7	12.4	-	29.6	2.3	25.2	21.8	18.4	15.0	11.6	-
	62	29.7	2.0	29.7	27.6	22.8	19.5	16.1	12.8	27.4	2.2	27.4	26.3	22.4	19.0	15.6	12.2
900	57	37.1	2.1	17.0	13.7	10.4	-	-	-	35.6	2.4	17.6	14.2	10.7	-	-	-
	77	35.1	2.1	22.4	19.1	15.8	12.4	-	-	33.3	2.3	22.4	18.9	15.5	12.0	-	-
	72	33.2	2.1	27.8	24.5	21.2	17.8	14.5	-	31.1	2.3	27.2	23.7	20.3	16.8	13.3	-
	67	31.2	2.0	31.2	29.8	25.3	22.0	18.7	15.4	28.8	2.2	28.8	28.1	24.6	21.2	17.7	14.3
	62	29.9	2.0	29.9	29.9	27.1	23.8	20.5	17.2	28.0	2.2	28.0	28.0	25.8	22.4	18.9	15.5
950	57	38.8	2.1	18.0	14.7	11.4	-	-	-	37.3	2.4	18.8	15.2	11.7	-	-	-
	77	36.8	2.1	24.0	20.7	17.3	14.0	-	-	34.9	2.3	24.0	20.4	16.9	13.4	-	-
	72	34.8	2.1	29.9	26.6	23.3	20.0	16.7	-	32.5	2.3	29.1	25.6	22.1	18.6	15.1	-
	67	32.7	2.1	32.7	32.0	27.9	24.6	21.3	17.9	30.2	2.3	30.2	29.8	26.9	23.4	19.8	16.3
	62	31.3	2.1	31.3	31.3	29.9	26.6	23.2	19.9	29.4	2.3	29.4	29.4	28.2	24.7	21.2	17.6
1000	57	40.6	2.2	19.1	15.8	12.5	-	-	-	39.0	2.4	19.9	16.3	12.7	-	-	-
	72	38.5	2.1	25.6	22.2	18.9	15.6	-	-	36.5	2.3	25.5	21.9	18.3	14.7	-	-
	67	36.4	2.1	32.0	28.7	25.4	22.1	18.8	-	34.0	2.3	31.1	27.6	24.0	20.4	16.8	-
	62	34.2	2.1	34.2	34.2	30.4	27.1	23.8	20.5	31.5	2.3	31.5	31.5	29.1	25.6	22.0	18.4
	57	32.8	2.1	32.8	32.8	32.6	29.3	26.0	22.7	30.7	2.3	30.7	30.7	30.6	27.0	23.4	19.8
1125	72	39.1	2.1	26.5	22.9	19.4	15.8	-	-	37.1	2.4	26.9	23.0	19.2	15.3	-	-
	67	37.0	2.1	34.1	29.6	26.0	22.4	18.9	-	34.6	2.3	32.8	28.9	25.1	21.2	17.4	-
	62	34.7	2.1	34.7	34.7	32.1	28.6	25.0	21.5	32.0	2.3	32.0	32.0	30.5	26.6	22.8	18.9
	57	33.3	2.1	33.3	33.3	33.2	29.7	26.1	22.5	31.2	2.3	31.2	31.2	31.1	27.3	23.4	19.6
1250	72	39.8	2.2	27.4	23.6	19.8	16.0	-	-	37.7	2.4	28.2	24.1	20.0	15.9	-	-
	67	37.6	2.1	36.1	30.4	26.6	22.8	19.0	-	35.1	2.3	34.4	30.3	26.2	22.0	17.9	-
	62	35.3	2.1	35.3	35.3	33.8	30.0	26.2	22.4	32.5	2.3	32.5	32.5	31.8	27.7	23.6	19.5
	57	33.8	2.1	33.8	33.8	33.8	30.0	26.2	22.4	31.7	2.3	31.7	31.7	31.7	27.6	23.5	19.4
		95°F								**105°F**							
850	77	32.4	2.6	17.1	13.7	10.2	-	-	-	30.7	2.8	17.4	13.0	9.4	-	-	-
	72	30.0	2.5	20.9	17.4	14.0	10.5	-	-	27.8	2.7	20.4	16.8	13.1	9.5	-	-
	67	27.5	2.5	24.7	21.2	17.8	14.3	10.8	-	24.9	2.6	23.5	20.6	16.9	13.2	9.6	-
	62	25.1	2.4	25.1	25.1	21.9	18.5	15.0	11.6	23.0	2.6	23.0	23.0	20.1	16.4	12.8	9.1
900	57	34.1	2.6	18.3	14.7	11.1	-	-	-	32.1	2.8	18.8	14.0	10.2	-	-	-
	77	31.5	2.5	22.4	18.8	15.2	11.6	-	-	29.1	2.7	21.8	18.1	14.3	10.6	-	-
	72	28.9	2.5	26.5	22.9	19.3	15.8	12.2	-	26.1	2.7	24.9	22.2	18.4	14.7	10.9	-
	67	26.4	2.4	26.4	26.4	23.9	20.3	16.7	13.1	24.1	2.6	24.1	24.1	21.9	18.2	14.4	10.7
	62	26.2	2.4	26.2	26.2	24.5	20.9	17.3	13.8	24.0	2.6	24.0	24.0	22.2	18.4	14.7	10.9
950	57	35.7	2.6	19.5	15.8	12.0	-	-	-	33.4	2.8	20.2	14.9	11.1	-	-	-
	77	33.0	2.5	23.9	20.2	16.5	12.8	-	-	30.3	2.7	23.2	19.4	15.5	11.7	-	-
	72	30.3	2.5	28.4	24.7	20.9	17.2	13.5	-	27.2	2.7	26.2	23.8	20.0	16.2	12.3	-
	67	27.6	2.4	27.6	27.6	25.9	22.1	18.4	14.7	25.1	2.6	25.1	25.1	23.7	19.9	16.1	12.2
	62	27.4	2.4	27.4	27.4	26.5	22.8	19.1	15.4	25.0	2.6	25.0	25.0	24.0	20.2	16.3	12.5
1000	57	37.4	2.6	20.7	16.8	12.9	-	-	-	34.8	2.8	21.6	15.9	11.9	-	-	-
	72	34.6	2.6	25.5	21.6	17.7	13.9	-	-	31.6	2.8	24.6	20.7	16.7	12.8	-	-
	67	31.7	2.5	30.3	26.4	22.5	18.7	14.8	-	28.3	2.7	27.6	25.5	21.5	17.6	13.7	-
	62	28.9	2.5	28.9	28.9	27.8	24.0	20.1	16.2	26.1	2.6	26.1	26.1	25.6	21.7	17.7	13.8
	57	28.7	2.5	28.7	28.7	28.6	24.7	20.8	17.0	26.0	2.6	26.0	26.0	25.9	21.9	18.0	14.1
1125	72	35.1	2.6	27.3	23.1	19.0	14.8	-	-	32.1	2.8	26.4	22.1	17.9	13.6	-	-
	67	32.2	2.5	31.5	28.3	24.1	20.0	15.8	-	28.8	2.7	28.4	26.7	23.0	18.8	14.5	-
	62	29.3	2.5	29.3	29.3	28.8	24.7	20.5	16.4	26.5	2.7	26.5	26.5	26.3	22.0	17.8	13.5
	57	29.1	2.5	29.1	29.1	29.1	24.9	20.8	16.6	26.5	2.7	26.5	26.5	26.4	22.1	17.9	13.6
1250	72	35.6	2.6	29.1	24.7	20.2	15.8	-	-	32.6	2.8	28.2	23.6	19.0	14.5	-	-
	67	32.7	2.5	32.7	30.1	25.7	21.3	16.9	-	29.2	2.7	29.2	28.0	24.5	19.9	15.4	-
	62	29.8	2.5	29.8	29.8	29.8	25.4	21.0	16.5	27.0	2.7	27.0	27.0	27.0	22.4	17.8	13.2
	57	29.6	2.5	29.6	29.6	29.6	25.2	20.7	16.3	26.9	2.7	26.9	26.9	26.9	22.3	17.7	13.1

DNZ030 (2.5 Ton) (Continued)

Air on Evaporator Coil		Temperature of Air on Condenser Coil															
		Net Capacity[1] (MBh)	Total Input (kW)[2]	Sensible Capacity (MBh) Return Dry Bulb (°F)						Net Capacity[1] (MBh)	Total Input (kW)[2]	Sensible Capacity (MBh) Return Dry Bulb (°F)					
CFM	WB (°F)			90	85	80	75	70	65			90	85	80	75	70	65
		115°F								125°F							
850	77	29.0	3.0	17.6	12.4	8.5	-	-	-	27.2	3.3	19.3	11.2	7.7	-	-	-
	72	25.7	2.9	20.0	16.1	12.3	8.4	-	-	23.5	3.1	19.6	15.5	11.4	7.4	-	-
	67	22.4	2.8	22.4	19.9	16.0	12.2	8.3	-	19.8	3.0	19.8	19.8	15.2	11.1	7.1	-
	62	21.0	2.8	21.0	21.0	18.2	14.3	10.5	6.6	18.9	3.0	18.9	18.9	16.3	12.3	8.2	4.1
900	57	30.0	3.0	19.3	13.2	9.3	-	-	-	28.0	3.3	21.0	12.8	8.4	-	-	-
	77	26.6	2.9	21.2	17.3	13.4	9.5	-	-	24.2	3.1	20.7	16.6	12.5	8.5	-	-
	72	23.2	2.8	23.2	21.5	17.6	13.6	9.7	-	20.4	3.0	20.4	20.4	16.7	12.6	8.5	-
	67	21.8	2.8	21.8	21.8	19.9	16.0	12.1	8.2	19.5	3.0	19.5	19.5	17.9	13.8	9.8	5.7
	62	21.8	2.8	21.8	21.8	19.8	15.9	12.0	8.1	19.6	3.0	19.6	19.6	17.4	13.3	9.3	5.2
950	57	31.1	3.0	20.9	14.1	10.1	-	-	-	28.8	3.3	22.6	14.5	9.1	-	-	-
	77	27.6	2.9	22.5	18.5	14.6	10.6	-	-	24.9	3.2	21.8	17.7	13.6	9.6	-	-
	72	24.1	2.9	24.1	23.0	19.1	15.1	11.2	-	20.9	3.0	20.9	20.9	18.1	14.1	10.0	-
	67	22.5	2.8	22.5	22.5	21.6	17.7	13.7	9.8	20.0	3.0	20.0	20.0	19.5	15.4	11.4	7.3
	62	22.6	2.8	22.6	22.6	21.5	17.5	13.6	9.6	20.1	3.0	20.1	20.1	18.9	14.9	10.8	6.7
1000	57	32.2	3.1	22.6	14.9	10.9	-	-	-	29.6	3.3	24.2	16.1	9.9	-	-	-
	72	28.6	3.0	23.7	19.7	15.7	11.7	-	-	25.5	3.2	22.9	18.8	14.7	10.7	-	-
	67	24.9	2.9	24.9	24.6	20.6	16.6	12.6	-	21.5	3.0	21.5	21.5	19.6	15.5	11.5	-
	62	23.3	2.8	23.3	23.3	23.3	19.3	15.3	11.3	20.5	3.0	20.5	20.5	20.5	17.0	12.9	8.9
	57	23.4	2.8	23.4	23.4	23.2	19.2	15.2	11.2	20.7	3.0	20.7	20.7	20.5	16.4	12.4	8.3
1125	72	29.1	3.0	25.5	21.2	16.8	12.4	-	-	26.1	3.2	24.7	20.2	15.7	11.2	-	-
	67	25.3	2.9	25.3	25.2	21.9	17.6	13.2	-	21.9	3.1	21.9	21.9	20.9	16.4	11.9	-
	62	23.7	2.8	23.7	23.7	23.7	19.4	15.0	10.6	21.0	3.0	21.0	21.0	21.0	16.7	12.2	7.7
	57	23.8	2.9	23.8	23.8	23.7	19.3	14.9	10.6	21.1	3.0	21.1	21.1	21.0	16.5	12.0	7.5
1250	72	29.6	3.0	27.4	22.6	17.8	13.1	-	-	26.6	3.2	26.5	21.6	16.6	11.7	-	-
	67	25.8	2.9	25.8	25.8	23.3	18.6	13.8	-	22.4	3.1	22.4	22.4	22.1	17.2	12.3	-
	62	24.2	2.9	24.2	24.2	24.2	19.4	14.7	9.9	21.4	3.1	21.4	21.4	21.4	16.4	11.5	6.6
	57	24.2	2.9	24.2	24.2	24.2	19.5	14.7	9.9	21.5	3.1	21.5	21.5	21.5	16.6	11.7	6.7

1. These capacities are Net Capacities.
2. These ratings include the compressor, condenser fan and supply air blower motors.

DNZ036 (3.0 Ton)

Air on Evaporator Coil		Temperature of Air on Condenser Coil															
		Net Capacity[1] (MBh)	Total Input (kW)[2]	Sensible Capacity (MBh) Return Dry Bulb (°F)						Net Capacity[1] (MBh)	Total Input (kW)[2]	Sensible Capacity (MBh) Return Dry Bulb (°F)					
CFM	WB (°F)			90	85	80	75	70	65			90	85	80	75	70	65
		75°F								**85°F**							
750	77	36.9	1.9	18.9	15.2	12.1	-	-	-	40.3	2.5	18.3	15.2	12.1	-	-	-
	72	34.7	2.0	22.9	19.8	16.7	13.6	-	-	37.1	2.5	23.2	20.0	16.8	13.7	-	-
	67	32.6	2.1	26.9	24.4	21.3	18.2	15.1	-	33.9	2.5	28.1	24.8	21.6	18.4	15.2	-
	62	30.7	2.0	30.7	30.7	26.4	23.3	20.2	17.1	31.3	2.5	31.3	30.7	25.7	22.5	19.3	16.2
900	77	39.2	1.9	20.6	17.0	13.4	-	-	-	41.4	2.4	20.5	16.8	13.2	-	-	-
	72	36.8	2.0	25.6	22.0	18.5	14.9	-	-	38.1	2.5	25.7	22.1	18.4	14.7	-	-
	67	34.5	2.2	30.7	27.1	23.5	19.9	16.3	-	34.8	2.5	30.9	27.3	23.6	19.9	16.2	-
	62	32.4	2.0	32.4	32.4	29.2	25.6	22.0	18.4	32.1	2.5	32.1	31.7	28.0	24.4	20.7	17.0
	57	32.7	2.1	32.7	32.7	29.7	26.1	22.5	19.0	32.7	2.5	32.7	32.3	28.7	25.0	21.3	17.6
1050	77	41.4	2.0	22.2	18.8	14.7	-	-	-	42.4	2.4	22.8	18.5	14.3	-	-	-
	72	38.9	2.1	28.4	24.3	20.2	16.1	-	-	39.1	2.5	28.3	24.1	19.9	15.7	-	-
	67	36.4	2.2	34.5	29.8	25.7	21.7	17.6	-	35.7	2.5	33.7	29.7	25.6	21.4	17.2	-
	62	34.2	2.1	34.2	34.2	31.9	27.8	23.7	19.7	32.9	2.5	32.9	32.7	30.4	26.2	22.0	17.9
	57	34.5	2.1	34.5	34.5	32.5	28.4	24.4	20.3	33.5	2.5	33.5	33.3	31.1	26.9	22.7	18.5
1200	77	43.7	2.0	23.8	20.5	15.9	-	-	-	43.5	2.4	25.1	20.1	15.4	-	-	-
	72	41.0	2.1	31.1	26.5	22.0	17.4	-	-	40.0	2.5	30.8	26.1	21.5	16.8	-	-
	67	38.4	2.2	38.4	32.6	28.0	23.4	18.8	-	36.6	2.5	36.6	32.2	27.5	22.9	18.2	-
	62	36.0	2.1	36.0	36.0	34.6	30.1	25.5	20.9	33.8	2.5	33.8	33.8	32.7	28.1	23.4	18.7
	57	36.3	2.1	36.3	36.3	35.3	30.7	26.2	21.6	34.3	2.5	34.3	34.3	33.5	28.8	24.1	19.4
1350	72	41.7	2.1	33.3	28.1	22.8	17.6	-	-	40.2	2.5	32.5	27.2	22.0	16.7	-	-
	67	39.0	2.2	39.0	34.3	29.1	23.9	18.7	-	36.8	2.5	36.8	33.4	28.2	22.9	17.7	-
	62	36.5	2.0	36.5	36.5	35.9	30.7	25.4	20.2	33.9	2.5	33.9	33.9	33.4	28.2	22.9	17.7
	57	36.9	2.1	36.9	36.9	36.4	31.2	25.9	20.7	34.5	2.5	34.5	34.5	34.1	28.8	23.6	18.3
1500	72	42.4	2.0	35.5	29.6	23.7	17.9	-	-	40.5	2.5	34.1	28.3	22.5	16.7	-	-
	67	39.6	2.1	39.6	36.1	30.2	24.4	18.5	-	37.0	2.5	37.0	34.7	28.9	23.0	17.2	-
	62	37.1	2.0	37.1	37.1	37.1	31.3	25.4	19.5	34.1	2.5	34.1	34.1	34.1	28.3	22.5	16.6
	57	37.4	2.0	37.4	37.4	37.4	31.6	25.7	19.8	34.7	2.5	34.7	34.7	34.7	28.9	23.1	17.2
		95°F								**105°F**							
750	77	43.7	3.0	17.6	15.2	12.0	-	-	-	40.0	3.3	16.0	14.3	11.1	-	-	-
	72	39.4	2.9	23.5	20.2	16.9	13.7	-	-	36.2	3.3	22.5	19.2	15.9	12.7	-	-
	67	35.1	2.9	29.4	25.2	21.9	18.6	15.4	-	32.5	3.3	29.0	24.1	20.7	17.5	14.2	-
	62	31.9	3.0	31.9	30.2	24.9	21.7	18.4	15.2	30.0	3.4	30.0	28.9	23.4	20.1	16.8	13.6
900	77	43.6	3.0	20.5	16.7	12.9	-	-	-	39.7	3.3	19.5	15.7	12.0	-	-	-
	72	39.3	2.9	25.8	22.1	18.3	14.5	-	-	36.0	3.3	24.7	20.9	17.2	13.4	-	-
	67	35.0	2.8	31.2	27.4	23.6	19.9	16.1	-	32.2	3.3	29.9	26.2	22.4	18.6	14.9	-
	62	31.8	3.0	31.8	30.7	26.9	23.1	19.4	15.6	29.8	3.4	29.8	29.0	25.3	21.5	17.7	14.0
	57	32.6	3.0	32.6	31.4	27.6	23.9	20.1	16.3	30.6	3.4	30.6	29.5	25.8	22.0	18.3	14.5
1050	77	43.4	2.9	23.4	18.2	13.9	-	-	-	39.4	3.3	23.0	17.2	12.9	-	-	-
	72	39.2	2.9	28.2	23.9	19.6	15.3	-	-	35.7	3.3	26.9	22.7	18.5	14.2	-	-
	67	34.9	2.8	33.0	29.6	25.4	21.1	16.8	-	32.0	3.3	30.8	28.2	24.0	19.8	15.6	-
	62	31.6	3.0	31.6	31.1	28.9	24.6	20.3	16.1	29.5	3.4	29.5	29.2	27.1	22.9	18.6	14.4
	57	32.5	2.9	32.5	31.9	29.6	25.4	21.1	16.8	30.4	3.4	30.4	29.8	27.7	23.4	19.2	15.0
1200	77	43.3	2.9	26.3	19.6	14.8	-	-	-	39.1	3.3	26.6	18.6	13.8	-	-	-
	72	39.0	2.8	30.5	25.7	21.0	16.2	-	-	35.4	3.3	29.2	24.4	19.7	15.0	-	-
	67	34.8	2.7	34.8	31.9	27.1	22.3	17.5	-	31.8	3.3	31.8	30.3	25.7	21.0	16.3	-
	62	31.5	2.9	31.5	31.5	30.8	26.1	21.3	16.5	29.3	3.4	29.3	29.3	29.0	24.3	19.5	14.8
	57	32.4	2.9	32.4	32.4	31.7	26.9	22.1	17.3	30.1	3.4	30.1	30.1	29.6	24.8	20.1	15.4
1350	72	38.8	2.9	31.7	26.4	21.1	15.8	-	-	35.3	3.3	30.5	25.3	20.0	14.8	-	-
	67	34.5	2.8	34.5	32.6	27.3	22.0	16.7	-	31.6	3.3	31.6	30.7	26.1	20.8	15.6	-
	62	31.3	3.0	31.3	31.3	31.0	25.7	20.4	15.1	29.2	3.4	29.2	29.2	29.1	23.8	18.6	13.3
	57	32.2	2.9	32.2	32.2	31.8	26.5	21.3	16.0	30.0	3.4	30.0	30.0	29.7	24.5	19.3	14.0
1500	72	38.5	2.9	32.8	27.0	21.3	15.5	-	-	35.2	3.3	31.9	26.1	20.3	14.5	-	-
	67	34.3	2.9	34.3	33.3	27.5	21.7	15.9	-	31.5	3.3	31.5	31.0	26.5	20.7	14.9	-
	62	31.1	3.0	31.1	31.1	31.1	25.3	19.6	13.8	29.1	3.5	29.1	29.1	29.1	23.4	17.6	11.8
	57	32.0	3.0	32.0	32.0	32.0	26.2	20.4	14.6	29.9	3.4	29.9	29.9	29.9	24.2	18.4	12.6

DNZ036 (3.0 Ton) (Continued)

Air on Evaporator Coil		Temperature of Air on Condenser Coil															
		Net Capacity[1] (MBh)	Total Input (kW)[2]	Sensible Capacity (MBh) Return Dry Bulb (°F)						Net Capacity[1] (MBh)	Total Input (kW)[2]	Sensible Capacity (MBh) Return Dry Bulb (°F)					
CFM	WB (°F)			90	85	80	75	70	65			90	85	80	75	70	65
		115°F								125°F							
750	77	36.2	3.6	14.4	13.4	10.2	-	-	-	32.4	3.9	13.9	11.7	9.3	-	-	-
	72	33.0	3.7	21.5	18.2	14.9	11.6	-	-	29.8	4.1	20.5	17.2	13.9	10.6	-	-
	67	29.8	3.8	28.6	23.0	19.6	16.3	13.0	-	27.1	4.2	27.1	21.9	18.4	15.1	11.8	-
	62	28.1	3.8	28.1	27.5	21.8	18.6	15.3	12.0	26.2	4.3	26.2	26.1	20.3	17.0	13.7	10.4
900	77	35.8	3.6	18.5	14.8	11.0	-	-	-	31.9	4.0	18.3	13.8	10.1	-	-	-
	72	32.6	3.7	23.6	19.8	16.1	12.4	-	-	29.3	4.1	22.5	18.7	15.0	11.3	-	-
	67	29.4	3.8	28.6	24.9	21.2	17.4	13.7	-	26.6	4.3	26.6	23.7	19.9	16.2	12.5	-
	62	27.8	3.9	27.8	27.3	23.6	19.9	16.1	12.4	25.8	4.3	25.8	25.7	21.9	18.2	14.5	10.8
	57	28.5	3.8	28.5	27.6	23.9	20.2	16.4	12.7	26.5	4.2	26.5	25.8	22.0	18.3	14.6	10.9
1050	77	35.4	3.7	22.7	16.2	11.9	-	-	-	31.3	4.1	22.7	15.9	10.9	-	-	-
	72	32.2	3.8	25.7	21.5	17.3	13.1	-	-	28.7	4.2	24.4	20.3	16.1	12.0	-	-
	67	29.1	3.8	28.7	26.8	22.7	18.5	14.3	-	26.2	4.4	26.2	25.4	21.4	17.3	13.1	-
	62	27.4	3.9	27.4	27.2	25.4	21.2	17.0	12.8	25.3	4.4	25.3	25.3	23.6	19.4	15.3	11.1
	57	28.2	3.8	28.2	27.7	25.7	21.5	17.3	13.1	26.0	4.3	26.0	25.7	23.7	19.5	15.4	11.2
1200	77	34.9	3.7	26.9	17.6	12.7	-	-	-	30.8	4.1	27.1	18.0	11.6	-	-	-
	72	31.8	3.8	27.8	23.1	18.5	13.8	-	-	28.2	4.3	26.4	21.8	17.3	12.7	-	-
	67	28.7	3.9	28.7	28.7	24.3	19.7	15.0	-	25.7	4.4	25.7	25.7	22.9	18.3	13.8	-
	62	27.1	3.9	27.1	27.1	27.1	22.5	17.8	13.2	24.9	4.4	24.9	24.9	24.9	20.7	16.1	11.5
	57	27.8	3.9	27.8	27.8	27.5	22.8	18.2	13.5	25.6	4.4	25.6	25.6	25.4	20.8	16.2	11.6
1350	72	31.9	3.8	29.3	24.1	18.9	13.7	-	-	28.4	4.2	28.2	23.0	17.8	12.7	-	-
	67	28.8	3.9	28.8	28.8	24.9	19.7	14.5	-	25.9	4.4	25.9	25.9	23.7	18.5	13.3	-
	62	27.1	3.9	27.1	27.1	27.1	21.9	16.7	11.5	25.0	4.4	25.0	25.0	25.0	20.0	14.9	9.7
	57	27.9	3.8	27.9	27.9	27.7	22.5	17.3	12.0	25.7	4.3	25.7	25.7	25.6	20.4	15.3	10.1
1500	72	31.9	3.7	30.9	25.1	19.4	13.6	-	-	28.6	4.2	28.6	24.2	18.4	12.6	-	-
	67	28.8	3.8	28.8	28.8	25.4	19.7	13.9	-	26.0	4.3	26.0	26.0	24.4	18.6	12.9	-
	62	27.1	3.9	27.1	27.1	27.1	21.4	15.6	9.8	25.2	4.3	25.2	25.2	25.2	19.4	13.6	7.9
	57	27.9	3.8	27.9	27.9	27.9	22.1	16.3	10.6	25.8	4.3	25.8	25.8	25.8	20.1	14.3	8.5

1. These capacities are Net Capacities.
2. These ratings include the compressor, condenser fan and supply air blower motors.

DNZ042 (3.5 Ton)

Air on Evaporator Coil		Temperature of Air on Condenser Coil															
		Net Capacity[1] (MBh)	Total Input (kW)[2]	Sensible Capacity (MBh) Return Dry Bulb (°F)						Net Capacity[1] (MBh)	Total Input (kW)[2]	Sensible Capacity (MBh) Return Dry Bulb (°F)					
CFM	WB (°F)			90	85	80	75	70	65			90	85	80	75	70	65
		75°F								85°F							
875	77	46.4	2.7	21.7	16.7	12.9	-	-	-	45.8	2.9	20.8	16.8	12.9	-	-	-
	72	44.6	2.6	27.5	23.6	19.8	15.9	-	-	42.9	2.9	27.0	23.1	19.1	15.2	-	-
	67	42.8	2.6	33.3	30.5	26.7	22.8	18.9	-	39.9	2.9	33.2	29.3	25.4	21.5	17.5	-
	62	39.1	2.5	39.1	39.1	32.1	28.2	24.4	20.5	36.5	2.8	36.5	36.5	30.4	26.4	22.5	18.6
1050	57	48.9	2.7	23.1	18.7	14.3	-	-	-	48.1	3.0	23.4	18.9	14.4	-	-	-
	77	47.0	2.7	30.8	26.4	22.0	17.6	-	-	45.0	2.9	30.4	25.9	21.4	16.8	-	-
	72	45.0	2.6	38.5	34.1	29.7	25.3	20.9	-	41.9	2.9	37.3	32.8	28.3	23.8	19.3	-
	67	41.2	2.6	41.2	41.2	35.8	31.4	27.0	22.6	38.4	2.8	38.4	38.4	33.9	29.4	24.8	20.3
	62	40.1	2.5	40.1	40.1	36.4	32.0	27.6	23.2	37.5	2.8	37.5	37.5	33.7	29.2	24.7	20.2
1225	57	51.4	2.7	24.5	20.7	15.8	-	-	-	50.4	3.0	26.1	21.0	15.9	-	-	-
	77	49.3	2.7	34.1	29.2	24.3	19.4	-	-	47.2	2.9	33.8	28.7	23.6	18.5	-	-
	72	47.3	2.6	43.6	37.6	32.7	27.8	22.9	-	43.9	2.9	41.4	36.4	31.3	26.2	21.1	-
	67	43.3	2.6	43.3	43.3	39.4	34.5	29.6	24.7	40.2	2.8	40.2	40.2	37.4	32.3	27.2	22.1
	62	42.1	2.6	42.1	42.1	40.1	35.2	30.3	25.4	39.3	2.8	39.3	39.3	37.2	32.2	27.1	22.0
1400	57	53.8	2.7	25.9	22.7	17.3	-	-	-	52.7	3.0	28.7	23.1	17.4	-	-	-
	72	51.7	2.7	37.3	31.9	26.5	21.1	-	-	49.3	2.9	37.1	31.5	25.8	20.1	-	-
	67	49.5	2.7	48.8	41.2	35.8	30.4	24.9	-	45.9	2.9	45.5	39.9	34.2	28.5	22.9	-
	62	45.3	2.6	45.3	45.3	43.1	37.7	32.3	26.8	42.0	2.8	42.0	42.0	40.9	35.2	29.5	23.9
	57	44.2	2.6	44.2	44.2	43.8	38.4	33.0	27.6	41.1	2.8	41.1	41.1	40.7	35.1	29.4	23.7
1515	72	51.7	2.7	38.5	32.8	27.1	21.4	-	-	49.5	3.0	38.7	32.7	26.7	20.6	-	-
	67	49.5	2.7	49.2	42.3	36.6	30.8	25.1	-	46.1	2.9	45.9	41.4	35.4	29.3	23.3	-
	62	45.4	2.6	45.4	45.4	44.2	38.5	32.8	27.0	42.2	2.9	42.2	42.2	41.6	35.6	29.6	23.5
	57	44.2	2.6	44.2	44.2	44.0	38.3	32.5	26.8	41.2	2.8	41.2	41.2	41.0	35.0	29.0	23.0
1630	72	51.7	2.7	39.7	33.7	27.7	21.6	-	-	49.6	3.0	40.3	33.9	27.5	21.2	-	-
	67	49.6	2.7	49.6	43.4	37.4	31.3	25.3	-	46.2	2.9	46.2	42.9	36.5	30.1	23.8	-
	62	45.4	2.6	45.4	45.4	45.4	39.3	33.3	27.3	42.3	2.9	42.3	42.3	42.3	35.9	29.6	23.2
	57	44.2	2.6	44.2	44.2	44.2	38.1	32.1	26.1	41.3	2.8	41.3	41.3	41.3	35.0	28.6	22.2
		95°F								105°F							
875	77	45.2	3.2	19.8	16.9	12.9	-	-	-	42.2	3.5	19.4	15.4	11.9	-	-	-
	72	41.1	3.1	26.5	22.5	18.5	14.5	-	-	37.7	3.4	25.4	21.3	17.2	13.1	-	-
	67	37.0	3.1	33.2	28.1	24.1	20.1	16.1	-	33.3	3.3	31.4	27.2	22.5	18.4	14.4	-
	62	33.9	3.0	33.9	33.9	28.6	24.6	20.6	16.6	32.4	3.3	32.4	32.4	26.7	22.6	18.5	14.4
1050	57	47.3	3.2	23.7	19.1	14.4	-	-	-	44.0	3.5	24.2	18.1	13.4	-	-	-
	77	43.1	3.2	30.0	25.3	20.7	16.1	-	-	39.4	3.4	28.9	24.1	19.4	14.7	-	-
	72	38.8	3.1	36.2	31.6	26.9	22.3	17.7	-	34.8	3.3	33.5	30.1	25.4	20.6	15.9	-
	67	35.5	3.1	35.5	35.5	32.0	27.3	22.7	18.0	33.9	3.3	33.9	33.9	30.0	25.3	20.6	15.8
	62	34.9	3.1	34.9	34.9	31.1	26.5	21.8	17.2	32.2	3.3	32.2	32.2	28.3	23.5	18.8	14.1
1225	57	49.5	3.2	27.7	21.3	16.0	-	-	-	45.9	3.5	29.1	20.9	14.9	-	-	-
	77	45.0	3.2	33.5	28.2	22.9	17.6	-	-	41.1	3.4	32.3	27.0	21.6	16.2	-	-
	72	40.5	3.1	39.3	35.1	29.8	24.5	19.2	-	36.3	3.4	35.6	33.0	28.2	22.8	17.4	-
	67	37.1	3.1	37.1	37.1	35.3	30.0	24.8	19.5	35.3	3.3	35.3	35.3	33.4	28.0	22.6	17.2
	62	36.4	3.1	36.4	36.4	34.4	29.1	23.8	18.6	33.6	3.3	33.6	33.6	31.4	26.0	20.6	15.2
1400	57	51.6	3.3	31.6	23.4	17.5	-	-	-	47.8	3.5	33.9	23.7	16.4	-	-	-
	72	46.9	3.2	36.9	31.0	25.1	19.1	-	-	42.8	3.5	35.8	29.8	23.7	17.7	-	-
	67	42.3	3.1	42.3	38.6	32.6	26.7	20.8	-	37.8	3.4	37.8	35.9	31.0	25.0	18.9	-
	62	38.7	3.1	38.7	38.7	38.7	32.8	26.8	20.9	36.8	3.3	36.8	36.8	36.8	30.7	24.7	18.6
	57	38.0	3.1	38.0	38.0	37.7	31.8	25.8	19.9	34.9	3.3	34.9	34.9	34.6	28.5	22.5	16.4
1515	72	47.3	3.2	38.9	32.5	26.2	19.9	-	-	43.1	3.5	37.7	31.3	24.8	18.3	-	-
	67	42.6	3.2	42.6	40.5	34.1	27.8	21.5	-	38.0	3.4	38.0	37.0	32.4	26.0	19.5	-
	62	39.0	3.1	39.0	39.0	39.0	32.7	26.3	20.0	37.0	3.3	37.0	37.0	37.0	30.6	24.1	17.7
	57	38.3	3.1	38.3	38.3	38.1	31.8	25.5	19.2	35.2	3.3	35.2	35.2	35.0	28.6	22.1	15.6
1630	72	47.6	3.2	40.8	34.1	27.4	20.7	-	-	43.4	3.5	39.6	32.8	25.9	19.0	-	-
	67	42.9	3.2	42.9	42.4	35.7	29.0	22.3	-	38.3	3.4	38.3	38.1	33.8	27.0	20.1	-
	62	39.2	3.1	39.2	39.2	39.2	32.5	25.8	19.1	37.3	3.4	37.3	37.3	37.3	30.4	23.6	16.7
	57	38.5	3.1	38.5	38.5	38.5	31.8	25.1	18.4	35.5	3.4	35.5	35.5	35.5	28.6	21.7	14.8

DNZ042 (3.5 Ton) (Continued)

Air on Evaporator Coil		Temperature of Air on Condenser Coil															
		Net Capacity[1] (MBh)	Total Input (kW)[2]	Sensible Capacity (MBh) Return Dry Bulb (°F)						Net Capacity[1] (MBh)	Total Input (kW)[2]	Sensible Capacity (MBh) Return Dry Bulb (°F)					
CFM	WB (°F)			90	85	80	75	70	65			90	85	80	75	70	65
		115°F								125°F							
875	77	39.1	3.8	18.9	13.9	10.9	-	-	-	36.1	4.1	20.4	11.9	9.9	-	-	-
	72	34.3	3.7	24.2	20.1	15.9	11.8	-	-	31.0	3.9	23.1	18.9	14.6	10.4	-	-
	67	29.6	3.6	29.6	26.3	20.9	16.8	12.6	-	25.8	3.8	25.8	25.8	19.3	15.1	10.9	-
	62	31.0	3.5	31.0	31.0	24.8	20.6	16.4	12.3	29.5	3.8	29.5	29.5	22.9	18.6	14.4	10.1
1050	57	40.7	3.8	24.7	17.2	12.4	-	-	-	37.5	4.1	26.4	16.6	11.4	-	-	-
	77	35.8	3.7	27.7	22.9	18.1	13.2	-	-	32.1	3.9	26.6	21.7	16.8	11.8	-	-
	72	30.8	3.6	30.8	28.6	23.8	18.9	14.1	-	26.8	3.8	26.8	26.8	22.2	17.3	12.3	-
	67	32.3	3.5	32.3	32.3	28.1	23.3	18.5	13.6	30.7	3.8	30.7	30.7	26.2	21.3	16.4	11.4
	62	29.5	3.6	29.5	29.5	25.4	20.6	15.7	10.9	26.9	3.8	26.9	26.9	22.5	17.6	12.7	7.8
1225	57	42.4	3.8	30.5	20.6	13.9	-	-	-	38.8	4.1	32.5	21.3	12.8	-	-	-
	77	37.2	3.7	31.2	25.7	20.2	14.7	-	-	33.3	4.0	30.1	24.5	18.9	13.3	-	-
	72	32.0	3.6	32.0	30.9	26.6	21.1	15.6	-	27.7	3.8	27.7	27.7	25.0	19.4	13.8	-
	67	33.6	3.6	33.6	33.6	31.5	26.0	20.5	15.0	31.8	3.8	31.8	31.8	29.6	24.0	18.3	12.7
	62	30.7	3.6	30.7	30.7	28.4	22.9	17.4	11.9	27.8	3.8	27.8	27.8	25.4	19.8	14.2	8.6
1400	57	44.0	3.8	36.2	23.9	15.3	-	-	-	40.2	4.1	38.5	26.0	14.3	-	-	-
	72	38.6	3.7	34.7	28.6	22.4	16.2	-	-	34.4	4.0	33.6	27.3	21.1	14.8	-	-
	67	33.2	3.6	33.2	33.2	29.4	23.3	17.1	-	28.7	3.8	28.7	28.7	27.8	21.6	15.3	-
	62	34.8	3.6	34.8	34.8	34.8	28.7	22.5	16.3	32.9	3.8	32.9	32.9	32.9	26.6	20.3	14.1
	57	31.9	3.6	31.9	31.9	31.5	25.3	19.1	13.0	28.8	3.8	28.8	28.8	28.3	22.1	15.8	9.5
1515	72	38.9	3.7	36.6	30.0	23.4	16.8	-	-	34.7	4.0	34.7	28.7	22.0	15.2	-	-
	67	33.5	3.6	33.5	33.5	30.7	24.1	17.5	-	29.0	3.9	29.0	29.0	29.0	22.3	15.5	-
	62	35.1	3.6	35.1	35.1	35.1	28.5	21.9	15.3	33.2	3.8	33.2	33.2	33.2	26.4	19.7	12.9
	57	32.1	3.6	32.1	32.1	31.9	25.3	18.7	12.1	29.1	3.8	29.1	29.1	28.8	22.1	15.3	8.5
1630	72	39.2	3.7	38.5	31.4	24.4	17.3	-	-	35.0	4.0	35.0	30.1	22.9	15.6	-	-
	67	33.8	3.6	33.8	33.8	32.0	25.0	17.9	-	29.2	3.9	29.2	29.2	29.2	23.0	15.8	-
	62	35.4	3.6	35.4	35.4	35.4	28.3	21.3	14.2	33.5	3.9	33.5	33.5	33.5	26.2	19.0	11.8
	57	32.4	3.6	32.4	32.4	32.4	25.3	18.3	11.2	29.3	3.9	29.3	29.3	29.3	22.1	14.8	7.6

1. These capacities are Net Capacities.
2. These ratings include the compressor, condenser fan and supply air blower motors.

DNZ048 (4.0 Ton)

Air on Evaporator Coil		Temperature of Air on Condenser Coil															
		Net Capacity[1] (MBh)	Total Input (kW)[2]	Sensible Capacity (MBh) Return Dry Bulb (°F)						Net Capacity[1] (MBh)	Total Input (kW)[2]	Sensible Capacity (MBh) Return Dry Bulb (°F)					
CFM	WB (°F)			90	85	80	75	70	65			90	85	80	75	70	65
		75°F								**85°F**							
1000	77	53.1	3.1	26.3	20.6	16.2	-	-	-	53.5	3.4	25.0	20.6	16.2	-	-	-
	72	49.7	3.0	32.0	27.5	23.1	18.7	-	-	49.0	3.3	31.5	27.1	22.7	18.3	-	-
	67	46.3	2.9	37.7	34.5	30.0	25.6	21.2	-	44.6	3.3	37.9	33.5	29.2	24.8	20.4	-
	62	40.7	3.0	40.7	40.7	36.3	31.9	27.4	23.0	40.4	3.3	40.4	40.4	35.2	30.8	26.4	22.0
1200	77	57.0	3.1	28.4	23.2	18.1	-	-	-	56.4	3.4	28.3	23.2	18.0	-	-	-
	72	53.3	3.0	36.2	31.0	25.9	20.8	-	-	51.7	3.3	35.4	30.3	25.2	20.1	-	-
	67	49.7	2.9	43.9	38.8	33.7	28.6	23.4	-	47.1	3.3	42.6	37.5	32.4	27.3	22.2	-
	62	43.7	2.9	43.7	43.7	40.7	35.6	30.5	25.3	42.6	3.3	42.6	42.6	39.0	33.9	28.8	23.7
	57	42.8	3.0	42.8	42.8	39.7	34.6	29.5	24.4	41.8	3.3	41.8	41.8	38.3	33.1	28.0	22.9
1400	77	61.0	3.1	30.5	25.9	20.1	-	-	-	59.4	3.4	31.6	25.7	19.8	-	-	-
	72	57.0	3.0	40.3	34.5	28.7	22.9	-	-	54.5	3.3	39.4	33.6	27.7	21.9	-	-
	67	53.0	2.9	50.2	43.1	37.3	31.5	25.7	-	49.5	3.3	47.3	41.5	35.6	29.8	23.9	-
	62	46.7	2.9	46.7	46.7	45.1	39.3	33.5	27.7	44.8	3.3	44.8	44.8	42.9	37.1	31.2	25.4
	57	45.7	2.9	45.7	45.7	44.0	38.2	32.4	26.6	44.0	3.3	44.0	44.0	42.1	36.2	30.4	24.5
1600	77	64.9	3.0	32.6	28.5	22.0	-	-	-	62.3	3.4	34.8	28.2	21.6	-	-	-
	72	60.6	2.9	44.5	38.0	31.5	25.0	-	-	57.2	3.3	43.4	36.8	30.2	23.7	-	-
	67	56.4	2.8	56.4	47.4	40.9	34.4	28.0	-	52.0	3.3	52.0	45.4	38.9	32.3	25.7	-
	62	49.7	2.9	49.7	49.7	49.5	43.0	36.5	30.0	47.1	3.3	47.1	47.1	46.8	40.3	33.7	27.1
	57	48.7	2.9	48.7	48.7	48.3	41.8	35.3	28.8	46.2	3.3	46.2	46.2	45.9	39.3	32.7	26.1
1735	72	60.1	3.0	46.3	39.3	32.4	25.4	-	-	56.8	3.4	45.3	38.3	31.3	24.3	-	-
	67	55.9	2.9	55.9	49.1	42.1	35.2	28.2	-	51.6	3.3	51.6	47.2	40.2	33.2	26.2	-
	62	49.3	2.9	49.3	49.3	49.1	42.2	35.3	28.3	46.7	3.3	46.7	46.7	46.6	39.6	32.6	25.7
	57	48.3	2.9	48.3	48.3	48.1	41.1	34.2	27.2	45.9	3.3	45.9	45.9	45.7	38.7	31.7	24.8
1870	72	59.6	3.0	48.1	40.7	33.3	25.9	-	-	56.4	3.4	47.1	39.7	32.3	24.9	-	-
	67	55.4	2.9	55.4	50.7	43.3	35.9	28.5	-	51.3	3.3	51.3	48.9	41.5	34.1	26.7	-
	62	48.8	2.9	48.8	48.8	48.8	41.4	34.0	26.6	46.4	3.3	46.4	46.4	46.4	39.0	31.6	24.2
	57	47.8	3.0	47.8	47.8	47.8	40.4	33.0	25.6	45.5	3.3	45.5	45.5	45.5	38.2	30.8	23.4
		95°F								**105°F**							
1000	77	53.9	3.6	23.7	20.6	16.3	-	-	-	49.3	4.2	25.1	20.1	14.8	-	-	-
	72	48.4	3.6	30.9	26.6	22.3	18.0	-	-	44.6	4.2	31.3	26.0	20.8	15.6	-	-
	67	42.9	3.7	38.2	32.6	28.3	23.9	19.6	-	39.8	4.2	37.4	32.0	26.8	21.6	16.4	-
	62	40.1	3.6	40.1	40.1	34.0	29.7	25.3	21.0	35.7	4.1	35.7	35.7	29.9	24.7	19.5	14.3
1200	77	55.8	3.7	28.2	23.1	18.0	-	-	-	51.3	4.2	29.2	22.2	16.5	-	-	-
	72	50.2	3.7	34.7	29.6	24.5	19.4	-	-	46.4	4.2	34.5	28.8	23.1	17.5	-	-
	67	44.5	3.7	41.3	36.2	31.1	26.0	20.9	-	41.4	4.2	39.8	35.5	29.8	24.1	18.4	-
	62	41.5	3.6	41.5	41.5	37.4	32.3	27.2	22.1	37.1	4.1	37.1	37.1	33.2	27.5	21.9	16.2
	57	40.9	3.6	40.9	40.9	36.8	31.7	26.6	21.4	38.0	4.2	38.0	38.0	34.0	28.4	22.7	17.0
1400	77	57.8	3.7	32.6	25.5	19.6	-	-	-	53.3	4.3	33.3	24.3	18.1	-	-	-
	72	51.9	3.7	38.6	32.7	26.8	20.9	-	-	48.2	4.2	37.8	31.6	25.5	19.3	-	-
	67	46.1	3.7	44.5	39.8	33.9	28.0	22.1	-	43.0	4.2	42.2	38.9	32.8	26.6	20.5	-
	62	43.0	3.7	43.0	43.0	40.8	34.9	29.0	23.1	38.5	4.1	38.5	38.5	36.5	30.4	24.2	18.1
	57	42.3	3.7	42.3	42.3	40.1	34.2	28.3	22.4	39.5	4.2	39.5	39.5	37.4	31.3	25.1	19.0
1600	77	59.8	3.7	37.1	27.9	21.2	-	-	-	55.3	4.3	37.4	26.4	19.8	-	-	-
	72	53.7	3.8	42.4	35.7	29.0	22.3	-	-	50.0	4.3	41.0	34.4	27.8	21.2	-	-
	67	47.6	3.8	47.6	43.5	36.8	30.1	23.4	-	44.6	4.2	44.6	42.4	35.8	29.2	22.6	-
	62	44.5	3.7	44.5	44.5	44.2	37.5	30.8	24.1	40.0	4.1	40.0	40.0	39.9	33.2	26.6	20.0
	57	43.7	3.7	43.7	43.7	43.5	36.8	30.1	23.4	41.0	4.2	41.0	41.0	40.8	34.2	27.6	21.0
1735	72	53.4	3.7	44.2	37.2	30.2	23.2	-	-	49.1	4.3	42.7	35.7	28.7	21.7	-	-
	67	47.4	3.8	47.4	45.3	38.3	31.2	24.2	-	43.8	4.2	43.8	42.7	37.0	29.9	22.9	-
	62	44.2	3.7	44.2	44.2	44.1	37.1	30.0	23.0	39.3	4.1	39.3	39.3	39.2	32.2	25.2	18.2
	57	43.5	3.7	43.5	43.5	43.4	36.3	29.3	22.3	40.2	4.2	40.2	40.2	40.2	33.2	26.1	19.1
1870	72	53.1	3.7	46.1	38.7	31.4	24.0	-	-	48.2	4.3	44.4	37.0	29.6	22.2	-	-
	67	47.1	3.7	47.1	47.1	39.8	32.4	25.0	-	43.0	4.2	43.0	43.0	38.1	30.7	23.3	-
	62	44.0	3.7	44.0	44.0	44.0	36.6	29.2	21.9	38.6	4.1	38.6	38.6	38.6	31.2	23.8	16.4
	57	43.3	3.7	43.3	43.3	43.3	35.9	28.5	21.1	39.5	4.2	39.5	39.5	39.5	32.1	24.7	17.3

DNZ048 (4.0 Ton) (Continued)

Air on Evaporator Coil		Temperature of Air on Condenser Coil															
		Net Capacity[1] (MBh)	Total Input (kW)[2]	Sensible Capacity (MBh) Return Dry Bulb (°F)						Net Capacity[1] (MBh)	Total Input (kW)[2]	Sensible Capacity (MBh) Return Dry Bulb (°F)					
CFM	WB (°F)			90	85	80	75	70	65			90	85	80	75	70	65
		115°F								**125°F**							
1000	77	44.8	4.8	26.5	19.5	13.4	-	-	-	40.3	5.4	30.2	18.1	11.9	-	-	-
	72	40.7	4.7	31.6	25.5	19.3	13.2	-	-	36.9	5.3	31.9	24.9	17.9	10.9	-	-
	67	36.7	4.7	36.7	31.5	25.3	19.2	13.1	-	33.6	5.2	33.6	31.1	23.9	16.9	9.9	-
	62	31.3	4.5	31.3	31.3	25.9	19.7	13.6	7.5	26.9	5.0	26.9	26.9	21.8	14.8	7.8	0.8
1200	77	46.8	4.8	30.2	21.3	15.0	-	-	-	42.3	5.4	32.8	20.4	13.5	-	-	-
	72	42.6	4.7	34.3	28.0	21.8	15.5	-	-	38.8	5.3	34.0	27.2	20.4	13.5	-	-
	67	38.3	4.7	38.3	34.7	28.5	22.2	16.0	-	35.3	5.2	35.3	34.0	27.2	20.4	13.5	-
	62	32.7	4.6	32.7	32.7	29.1	22.8	16.6	10.3	28.2	5.0	28.2	28.2	24.9	18.1	11.3	4.4
	57	35.2	4.7	35.2	35.2	31.3	25.0	18.8	12.5	32.3	5.3	32.3	32.3	28.6	21.7	14.9	8.1
1400	77	48.9	4.8	33.9	23.1	16.7	-	-	-	44.4	5.3	35.3	22.7	15.2	-	-	-
	72	44.4	4.8	36.9	30.6	24.2	17.8	-	-	40.7	5.3	36.1	29.5	22.9	16.2	-	-
	67	40.0	4.7	40.0	38.0	31.6	25.2	18.8	-	37.0	5.2	37.0	37.0	30.5	23.8	17.2	-
	62	34.1	4.6	34.1	34.1	32.3	25.9	19.5	13.1	29.6	5.0	29.6	29.6	28.0	21.4	14.7	8.1
	57	36.7	4.8	36.7	36.7	34.8	28.4	22.0	15.6	33.9	5.3	33.9	33.9	32.1	25.4	18.8	12.1
1600	77	50.9	4.8	37.6	24.9	18.3	-	-	-	46.4	5.3	37.8	24.9	16.9	-	-	-
	72	46.3	4.8	39.6	33.1	26.6	20.0	-	-	42.6	5.3	38.3	31.8	25.3	18.9	-	-
	67	41.7	4.7	41.7	41.3	34.8	28.3	21.7	-	38.7	5.2	38.7	38.7	33.8	27.3	20.9	-
	62	35.5	4.6	35.5	35.5	35.5	29.0	22.4	15.9	31.0	5.0	31.0	31.0	31.0	24.7	18.2	11.8
	57	38.2	4.8	38.2	38.2	38.2	31.7	25.1	18.6	35.5	5.3	35.5	35.5	35.5	29.1	22.7	16.2
1735	72	44.7	4.8	41.2	34.2	27.2	20.2	-	-	40.4	5.3	39.7	32.7	25.7	18.8	-	-
	67	40.3	4.7	40.3	40.1	35.6	28.7	21.7	-	36.7	5.2	36.7	36.7	34.3	27.4	20.4	-
	62	34.3	4.6	34.3	34.3	34.3	27.3	20.3	13.4	29.4	5.0	29.4	29.4	29.4	22.5	15.5	8.5
	57	37.0	4.8	37.0	37.0	37.0	30.0	23.0	16.0	33.7	5.3	33.7	33.7	33.7	26.8	19.8	12.8
1870	72	43.2	4.8	42.7	35.3	27.9	20.4	-	-	38.3	5.3	38.3	33.6	26.1	18.6	-	-
	67	38.9	4.7	38.9	38.9	36.5	29.1	21.6	-	34.8	5.2	34.8	34.8	34.8	27.4	19.9	-
	62	33.1	4.6	33.1	33.1	33.1	25.7	18.3	10.8	27.7	5.1	27.7	27.7	27.7	20.3	12.8	5.3
	57	35.7	4.8	35.7	35.7	35.7	28.2	20.8	13.4	31.9	5.3	31.9	31.9	31.9	24.4	16.9	9.5

1. These capacities are Net Capacities.
2. These ratings include the compressor, condenser fan and supply air blower motors.

DNZ060 (5.0 Ton)

Air on Evaporator Coil		Temperature of Air on Condenser Coil															
		Net Capacity[1] (MBh)	Total Input (kW)[2]	Sensible Capacity (MBh) Return Dry Bulb (°F)						Net Capacity[1] (MBh)	Total Input (kW)[2]	Sensible Capacity (MBh) Return Dry Bulb (°F)					
CFM	WB (°F)			90	85	80	75	70	65			90	85	80	75	70	65
		75°F								**85°F**							
1250	77	68.8	4.1	23.2	18.4	13.1	-	-	-	68.3	4.4	29.8	24.7	19.4	-	-	-
	72	64.6	3.9	35.1	29.8	24.4	19.0	-	-	63.1	4.3	38.7	33.4	28.1	22.8	-	-
	67	60.4	3.8	47.0	41.1	35.7	30.3	24.9	-	57.9	4.2	47.7	42.1	36.8	31.5	26.3	-
	62	53.8	3.8	53.8	51.4	37.8	32.5	27.1	21.7	53.2	4.2	53.2	52.1	43.6	38.3	33.0	27.7
1500	77	71.2	4.0	28.1	22.0	15.9	-	-	-	70.0	4.4	33.5	27.4	21.2	-	-	-
	72	66.8	3.9	40.8	34.7	28.6	22.5	-	-	64.6	4.3	43.0	36.9	30.7	24.5	-	-
	67	62.5	3.7	53.5	47.4	41.3	35.2	29.1	-	59.3	4.3	52.5	46.4	40.2	34.1	27.9	-
	62	55.6	3.8	55.6	54.1	44.4	38.3	32.2	26.1	54.6	4.2	54.6	53.8	47.6	41.5	35.3	29.1
	57	56.6	3.7	56.6	55.6	45.7	39.6	33.5	27.4	55.0	4.2	55.0	54.4	48.3	42.1	36.0	29.8
1750	77	73.6	4.0	32.9	25.5	18.7	-	-	-	71.7	4.4	37.3	30.0	23.0	-	-	-
	72	69.1	3.8	46.5	39.7	32.8	26.0	-	-	66.2	4.3	47.3	40.3	33.3	26.3	-	-
	67	64.5	3.7	60.1	53.8	47.0	40.2	33.3	-	60.7	4.3	57.4	50.6	43.6	36.6	29.5	-
	62	57.5	3.7	57.5	56.7	51.0	44.1	37.3	30.5	55.9	4.2	55.9	55.5	51.6	44.6	37.6	30.5
	57	58.5	3.7	58.5	58.0	52.4	45.5	38.7	31.9	56.3	4.2	56.3	56.0	52.3	45.3	38.3	31.3
2000	77	76.0	4.0	37.8	29.1	21.5	-	-	-	73.4	4.4	41.0	32.6	24.8	-	-	-
	72	71.3	3.8	52.2	44.6	37.1	29.5	-	-	67.8	4.3	51.6	43.7	35.8	28.0	-	-
	67	66.6	3.7	66.6	60.2	52.6	45.1	37.5	-	62.2	4.3	62.2	54.8	46.9	39.1	31.2	-
	62	59.4	3.7	59.4	59.4	57.5	50.0	42.4	34.9	57.2	4.2	57.2	57.2	55.6	47.7	39.8	31.9
	57	60.4	3.7	60.4	60.4	59.0	51.5	43.9	36.4	57.6	4.2	57.6	57.6	56.4	48.5	40.6	32.7
2050	72	72.4	3.8	53.1	45.5	37.9	30.2	-	-	69.3	4.3	54.3	46.5	38.6	30.7	-	-
	67	67.7	3.7	67.7	61.9	54.2	46.6	39.0	-	63.6	4.3	63.6	58.4	50.5	42.7	34.8	-
	62	60.3	3.7	60.3	60.3	59.4	51.7	44.1	36.5	58.5	4.2	58.5	58.5	57.7	49.8	42.0	34.1
	57	61.4	3.7	61.4	61.4	60.7	53.0	45.4	37.8	59.0	4.2	59.0	59.0	58.3	50.5	42.6	34.7
2100	72	73.5	3.8	54.1	46.4	38.7	31.0	-	-	70.9	4.4	57.1	49.2	41.3	33.5	-	-
	67	68.7	3.7	68.7	63.5	55.8	48.1	40.4	-	65.0	4.3	65.0	62.0	54.1	46.3	38.4	-
	62	61.2	3.7	61.2	61.2	61.2	53.5	45.8	38.1	59.8	4.2	59.8	59.8	59.8	52.0	44.1	36.2
	57	62.3	3.7	62.3	62.3	62.3	54.6	46.9	39.2	60.3	4.2	60.3	60.3	60.3	52.4	44.6	36.7
		95°F								**105°F**							
1250	77	67.7	4.7	36.2	31.0	25.8	-	-	-	62.5	5.5	29.9	26.4	21.1	-	-	-
	72	61.5	4.7	42.3	37.1	31.9	26.7	-	-	57.2	5.5	38.9	33.6	28.3	23.0	-	-
	67	55.3	4.7	48.4	43.2	38.0	32.8	27.6	-	51.8	5.5	48.0	40.9	35.6	30.3	25.0	-
	62	52.7	4.6	52.7	52.7	49.4	44.2	39.0	33.8	49.0	5.3	49.0	49.0	43.5	38.2	32.9	27.6
1500	77	68.7	4.7	39.0	32.7	26.5	-	-	-	63.5	5.5	34.7	28.5	22.2	-	-	-
	72	62.4	4.8	45.2	39.0	32.8	26.6	-	-	58.1	5.5	42.4	36.2	29.9	23.7	-	-
	67	56.1	4.8	51.5	45.3	39.1	32.9	26.6	-	52.7	5.5	50.1	43.9	37.7	31.4	25.2	-
	62	53.5	4.6	53.5	53.5	50.8	44.6	38.4	32.2	49.9	5.3	49.9	49.9	45.9	39.7	33.5	27.2
	57	53.3	4.6	53.3	53.3	50.9	44.7	38.5	32.3	50.2	5.3	50.2	50.2	45.8	39.6	33.4	27.1
1750	77	69.7	4.8	41.7	34.5	27.3	-	-	-	64.5	5.5	39.5	30.5	23.4	-	-	-
	72	63.3	4.8	48.1	40.9	33.7	26.5	-	-	59.0	5.5	45.9	38.7	31.5	24.4	-	-
	67	57.0	4.8	54.6	47.4	40.2	32.9	25.7	-	53.5	5.5	52.2	46.9	39.7	32.6	25.4	-
	62	54.3	4.7	54.3	54.3	52.2	45.0	37.8	30.6	50.7	5.4	50.7	50.7	48.3	41.2	34.0	26.9
	57	54.1	4.6	54.1	54.1	52.3	45.1	37.9	30.7	51.0	5.3	51.0	51.0	48.3	41.1	33.9	26.8
2000	77	70.7	4.8	44.4	36.2	28.0	-	-	-	65.6	5.5	44.3	32.6	24.5	-	-	-
	72	64.2	4.8	51.0	42.8	34.6	26.4	-	-	60.0	5.5	49.3	41.2	33.1	25.0	-	-
	67	57.8	4.9	57.7	49.5	41.2	33.0	24.8	-	54.4	5.5	54.3	49.9	41.8	33.7	25.6	-
	62	55.0	4.7	55.0	55.0	53.6	45.4	37.2	29.0	51.5	5.4	51.5	51.5	50.8	42.7	34.6	26.5
	57	54.9	4.7	54.9	54.9	53.7	45.5	37.3	29.1	51.8	5.4	51.8	51.8	50.7	42.6	34.5	26.4
2050	72	66.2	4.8	55.6	47.4	39.3	31.2	-	-	61.5	5.5	52.8	44.7	36.7	28.6	-	-
	67	59.6	4.9	59.5	55.0	46.8	38.7	30.6	-	55.7	5.5	55.7	53.3	46.2	38.2	30.1	-
	62	56.7	4.7	56.7	56.7	56.1	47.9	39.8	31.7	52.8	5.4	52.8	52.8	52.4	44.4	36.3	28.3
	57	56.6	4.7	56.6	56.6	56.0	47.9	39.8	31.6	53.1	5.4	53.1	53.1	52.5	44.5	36.4	28.4
2100	72	68.3	4.9	60.1	52.0	44.0	36.0	-	-	63.0	5.5	56.2	48.2	40.2	32.3	-	-
	67	61.4	4.9	61.4	60.5	52.4	44.4	36.4	-	57.1	5.5	57.1	56.6	50.6	42.6	34.6	-
	62	58.5	4.7	58.5	58.5	58.5	50.4	42.4	34.4	54.0	5.4	54.0	54.0	54.0	46.0	38.1	30.1
	57	58.3	4.7	58.3	58.3	58.3	50.3	42.2	34.2	54.4	5.4	54.4	54.4	54.4	46.4	38.4	30.4

DNZ060 (5.0 Ton) (Continued)

Air on Evaporator Coil		Temperature of Air on Condenser Coil															
		Net Capacity[1] (MBh)	Total Input (kW)[2]	Sensible Capacity (MBh)						Net Capacity[1] (MBh)	Total Input (kW)[2]	Sensible Capacity (MBh)					
CFM	WB (°F)			Return Dry Bulb (°F)								Return Dry Bulb (°F)					
				90	85	80	75	70	65			90	85	80	75	70	65
		115°F								**125°F**							
1250	77	57.3	6.2	23.5	21.8	16.4	-	-	-	52.0	7.0	19.5	15.6	11.7	-	-	-
	72	52.8	6.2	35.5	30.2	24.8	19.4	-	-	48.4	6.9	32.2	26.7	21.3	15.8	-	-
	67	48.3	6.2	47.6	38.5	33.2	27.8	22.4	-	44.8	6.9	44.8	36.2	30.8	25.3	19.9	-
	62	45.4	6.0	45.4	45.4	37.5	32.2	26.8	21.4	41.7	6.8	41.7	41.7	31.6	26.1	20.7	15.2
1500	77	58.3	6.2	30.4	24.2	17.9	-	-	-	53.1	7.0	27.7	19.9	13.7	-	-	-
	72	53.8	6.2	39.6	33.3	27.1	20.8	-	-	49.4	6.9	36.7	30.5	24.2	18.0	-	-
	67	49.2	6.2	48.7	42.5	36.2	30.0	23.7	-	45.8	6.9	45.8	41.1	34.8	28.5	22.3	-
	62	46.2	6.0	46.2	46.2	41.0	34.7	28.5	22.3	42.6	6.8	42.6	42.6	36.1	29.8	23.6	17.3
	57	47.0	6.0	47.0	47.0	40.8	34.5	28.3	22.0	43.9	6.7	43.9	43.9	35.7	29.4	23.2	16.9
1750	77	59.4	6.2	37.3	26.6	19.5	-	-	-	54.2	6.9	36.0	24.2	15.6	-	-	-
	72	54.8	6.2	43.6	36.5	29.4	22.3	-	-	50.5	6.9	41.3	34.3	27.2	20.1	-	-
	67	50.1	6.2	49.9	46.4	39.3	32.2	25.1	-	46.7	6.8	46.7	45.9	38.8	31.8	24.7	-
	62	47.1	6.0	47.1	47.1	44.5	37.3	30.2	23.1	43.5	6.7	43.5	43.5	40.6	33.5	26.4	19.4
	57	47.9	6.0	47.9	47.9	44.2	37.1	30.0	22.9	44.8	6.7	44.8	44.8	40.2	33.1	26.0	19.0
2000	77	60.5	6.2	44.3	29.0	21.0	-	-	-	55.3	6.9	44.2	28.5	17.5	-	-	-
	72	55.7	6.2	47.6	39.6	31.7	23.7	-	-	51.5	6.9	45.9	38.1	30.2	22.3	-	-
	67	51.0	6.2	51.0	50.3	42.3	34.4	26.4	-	47.6	6.8	47.6	47.6	42.9	35.0	27.1	-
	62	47.9	6.0	47.9	47.9	47.9	39.9	31.9	23.9	44.4	6.7	44.4	44.4	44.4	37.2	29.3	21.4
	57	48.7	6.0	48.7	48.7	47.7	39.7	31.7	23.7	45.7	6.7	45.7	45.7	44.6	36.7	28.9	21.0
2050	72	56.7	6.2	50.0	42.0	34.1	26.1	-	-	52.0	6.9	47.2	39.3	31.4	23.6	-	-
	67	51.9	6.2	51.9	51.6	45.6	37.6	29.6	-	48.1	6.8	48.1	48.1	44.9	37.0	29.2	-
	62	48.8	6.1	48.8	48.8	48.8	40.8	32.8	24.9	44.8	6.7	44.8	44.8	44.8	37.2	29.3	21.4
	57	49.6	6.0	49.6	49.6	49.0	41.1	33.1	25.1	46.1	6.7	46.1	46.1	45.6	37.7	29.8	21.9
2100	72	57.7	6.2	52.4	44.4	36.5	28.5	-	-	52.4	6.9	48.5	40.6	32.7	24.8	-	-
	67	52.8	6.2	52.8	52.8	48.8	40.9	32.9	-	48.5	6.8	48.5	48.5	47.0	39.1	31.2	-
	62	49.6	6.1	49.6	49.6	49.6	41.7	33.7	25.8	45.2	6.7	45.2	45.2	45.2	37.3	29.4	21.5
	57	50.4	6.0	50.4	50.4	50.4	42.5	34.6	26.6	46.5	6.7	46.5	46.5	46.5	38.6	30.7	22.8

1. These capacities are Net Capacities.
2. These ratings include the compressor, condenser fan and supply air blower motors.

Airflow Performance

Side Duct Application

DNZ024-060

Size (Tons)	Model	Unit Speed	External Static Pressure (Inch Water Gauge)														
			0.2			0.4			0.6			0.8			1.0		
			SCFM	W	RPM	SCFM	W	RPM	SCFM	W	RPM	SCFM	W	RPM	SCFM	W	RPM
024 (2.0)	DNZ	Low (1)	719	115	752	617	130	858	-	-	-	-	-	-	-	-	-
		Low/Medium (2)	781	137	789	691	155	891	-	-	-	-	-	-	-	-	-
		Medium (3)	902	187	858	824	207	949	734	223	1037	622	230	1116	-	-	-
		Medium/High (4)	-	-	-	937	258	998	845	270	1075	722	271	1146	-	-	-
		High (5)	-	-	-	-	-	-	933	316	1104	796	307	1162	-	-	-
030 (2.5)	DNZ	Low (1)	827	163	825	759	187	919	-	-	-	-	-	-	-	-	-
		Low/Medium (2)	988	251	914	916	269	992	831	282	1067	-	-	-	-	-	-
		Medium (3)	1113	322	984	1035	333	1047	941	337	1108	818	329	1162	-	-	-
		Medium/High (4)	1233	394	1050	1145	394	1099	1040	388	1145	901	367	1184	-	-	-
		High (5)	-	-	-	-	-	-	1078	425	1164	867	353	1173	-	-	-
036 (3.0)	DNZ	Low (1)	1032	236	789	921	258	853	-	-	-	-	-	-	-	-	-
		Low/Medium (2)	1185	317	859	1089	347	924	985	373	991	-	-	-	-	-	-
		Medium (3)	1304	395	913	1214	424	978	1114	448	1040	994	462	1098	-	-	-
		Medium/High (4)	1445	515	976	1357	532	1041	1252	542	1097	1117	537	1140	-	-	-
		High (5)	-	-	-	1498	708	1108	1363	665	1157	1179	599	1178	-	-	-
042 (3.5)	DNZ	Low (1)	1114	176	642	-	-	-	-	-	-	-	-	-	-	-	-
		Low/Medium (2)	1223	230	679	1056	264	773	-	-	-	-	-	-	-	-	-
		Medium (3)	1641	404	751	1418	460	872	1288	492	942	1187	518	997	1101	540	1044
		Medium/High (4)	-	-	-	1535	547	904	1398	582	976	1292	606	1030	1203	624	1074
		High (5)	-	-	-	1665	664	940	1514	701	1015	1399	720	1067	1304	729	1106
048 (4.0)	DNZ	Low (1)	1378	310	749	1209	343	840	-	-	-	-	-	-	-	-	-
		Low/Medium (2)	1414	331	763	1253	366	851	-	-	-	-	-	-	-	-	-
		Medium (3)	1713	544	872	1604	587	940	1484	624	1005	1343	653	1067	-	-	-
		Medium/High (4)	1882	703	931	1786	740	987	1671	769	1044	1522	783	1099	1231	717	1142
		High (5)	-	-	-	1972	946	1037	1851	949	1078	1689	927	1118	1306	759	1142
060 (5.0)	DNZ	Low (1)	1556	416	802	-	-	-	-	-	-	-	-	-	-	-	-
		Low/Medium (2)	1648	489	843	1522	529	917	-	-	-	-	-	-	-	-	-
		Medium (3)	1767	595	892	1664	633	954	1546	668	1015	-	-	-	-	-	-
		Medium/High (4)	1913	739	946	1819	769	996	1702	791	1049	1550	800	1102	-	-	-
		High (5)	2103	952	1007	1990	957	1047	1855	948	1086	1674	912	1122	-	-	-

Bottom Duct Application

DNZ024-060

Size (Tons)	Model	Unit Speed	External Static Pressure (Inch Water Gauge)														
			0.2			0.4			0.6			0.8			1.0		
			SCFM	W	RPM	SCFM	W	RPM	SCFM	W	RPM	SCFM	W	RPM	SCFM	W	RPM
024 (2.0)	DNZ	Low (1)	719	115	752	617	130	858	-	-	-	-	-	-	-	-	-
		Low/Medium (2)	781	137	789	691	155	891	-	-	-	-	-	-	-	-	-
		Medium (3)	902	187	858	824	207	949	734	223	1037	622	230	1116	-	-	-
		Medium/High (4)	-	-	-	937	258	998	845	270	1075	722	271	1146	-	-	-
		High (5)	-	-	-	-	-	-	933	316	1104	796	307	1162	-	-	-
030 (2.5)	DNZ	Low (1)	827	163	825	759	187	919	-	-	-	-	-	-	-	-	-
		Low/Medium (2)	988	251	914	916	269	992	831	282	1067	-	-	-	-	-	-
		Medium (3)	1113	322	984	1035	333	1047	941	337	1108	818	329	1162	-	-	-
		Medium/High (4)	1233	394	1050	1145	394	1099	1040	388	1145	901	367	1184	-	-	-
		High (5)	-	-	-	-	-	-	1078	425	1164	867	353	1173	-	-	-
036 (3.0)	DNZ	Low (1)	1032	236	789	921	258	853	-	-	-	-	-	-	-	-	-
		Low/Medium (2)	1185	317	859	1089	347	924	985	373	991	-	-	-	-	-	-
		Medium (3)	1304	395	913	1214	424	978	1114	448	1040	994	462	1098	-	-	-
		Medium/High (4)	1445	515	976	1357	532	1041	1252	542	1097	1117	537	1140	-	-	-
		High (5)	-	-	-	1498	708	1108	1363	665	1157	1179	599	1178	-	-	-
042 (3.5)	DNZ	Low (1)	1114	176	642	-	-	-	-	-	-	-	-	-	-	-	-
		Low/Medium (2)	1223	230	679	1056	264	773	-	-	-	-	-	-	-	-	-
		Medium (3)	1641	404	751	1418	460	872	1288	492	942	1187	518	997	1101	540	1044
		Medium/High (4)	-	-	-	1535	547	904	1398	582	976	1292	606	1030	1203	624	1074
		High (5)	-	-	-	1665	664	940	1514	701	1015	1399	720	1067	1304	729	1106
048 (4.0)	DNZ	Low (1)	1378	310	749	1209	343	840	-	-	-	-	-	-	-	-	-
		Low/Medium (2)	1414	331	763	1253	366	851	-	-	-	-	-	-	-	-	-
		Medium (3)	1713	544	872	1604	587	940	1484	624	1005	1343	653	1067	-	-	-
		Medium/High (4)	1882	703	931	1786	740	987	1671	769	1044	1522	783	1099	1231	717	1142
		High (5)	-	-	-	1972	946	1037	1851	949	1078	1689	927	1118	1306	759	1142
060 (5.0)	DNZ	Low (1)	1556	416	802	-	-	-	-	-	-	-	-	-	-	-	-
		Low/Medium (2)	1648	489	843	1522	529	917	-	-	-	-	-	-	-	-	-
		Medium (3)	1767	595	892	1664	633	954	1546	668	1015	-	-	-	-	-	-
		Medium/High (4)	1913	739	946	1819	769	996	1702	791	1049	1550	800	1102	-	-	-
		High (5)	2103	952	1007	1990	957	1047	1855	948	1086	1674	912	1122	-	-	-

Additional Static Resistance

Size (Tons)	Model	CFM	Wet Indoor Coil	Economizer[1]	Filter/Frame Kit	Electric Heat
024 (2.0)	DNZ	500	0.01	0.00	0.01	-
		600	0.01	0.00	0.02	-
		700	0.01	0.00	0.04	-
		800	0.02	0.01	0.06	-
		900	0.03	0.01	0.08	-
		1000	0.04	0.01	0.10	-
		1100	0.05	0.01	0.13	-
		1200	0.06	0.02	0.16	-
030 (2.5)	DNZ	700	0.01	0.00	0.04	-
		800	0.02	0.01	0.06	-
		900	0.03	0.01	0.08	-
		1000	0.04	0.01	0.10	-
		1100	0.05	0.01	0.13	-
		1200	0.06	0.02	0.16	-
		1300	0.07	0.03	0.17	-
036 (3.0)	DNZ	700	0.01	0.00	0.04	-
		800	0.02	0.01	0.06	-
		900	0.03	0.01	0.08	-
		1000	0.04	0.01	0.10	-
		1100	0.05	0.01	0.13	-
		1200	0.06	0.02	0.16	-
		1300	0.07	0.03	0.17	-
		1400	0.08	0.04	0.18	-
042 (3.5)	DNZ	1100	0.02	0.02	0.04	-
		1200	0.03	0.02	0.04	-
		1300	0.04	0.02	0.05	-
		1400	0.05	0.03	0.05	-
		1500	0.06	0.04	0.06	-
		1600	0.07	0.04	0.07	-
		1700	0.07	0.04	0.08	-
		1800	0.08	0.04	0.09	-
		1900	0.09	0.05	0.10	-
		2000	0.09	0.05	0.11	-
048 (4.0)	DNZ	1100	0.02	0.02	0.04	-
		1200	0.03	0.02	0.04	-
		1300	0.04	0.02	0.05	-
		1400	0.05	0.03	0.05	-
		1500	0.06	0.04	0.06	-
		1600	0.07	0.04	0.07	-
		1700	0.07	0.04	0.08	-
		1800	0.08	0.04	0.09	-
		1900	0.09	0.05	0.10	-
		2000	0.09	0.05	0.11	-
060 (5.0)	DNZ	1100	0.02	0.02	0.04	-
		1200	0.03	0.02	0.04	-
		1300	0.04	0.02	0.05	-
		1400	0.05	0.03	0.05	-
		1500	0.06	0.04	0.06	-
		1600	0.07	0.04	0.07	-
		1700	0.07	0.04	0.08	-
		1800	0.08	0.04	0.09	-
		1900	0.09	0.05	0.10	-
		2000	0.09	0.05	0.11	-

1. The pressure drop through the economizer is greater for 100% outdoor air than for 100% return air. If the resistance of the return air duct is less than 0.25 IWG, the unit will deliver less CFM during full economizer operation.

Gas Heat Minimum Supply Air

Size (Tons)	Model	Heat Size	Supply Air (CFM)			
			Cooling		Heating	
			Min	Max	Min	Max
024 (2.0)	DNZ	N036	600	1000	610	1330
		D056	600	1000	860	1730
030 (2.5)	DNZ	N036	750	1250	610	1330
		N056	750	1250	860	1730
		D056	750	1250	860	1730
036 (3.0)	DNZ	N036	1200	1500	610	1330
		N056	1200	1500	940	2070
		D056	1200	1500	940	2070
		N072	1200	1500	1110	2220
		D072	1200	1500	1110	2220
042 (3.5)	DNZ	N065	1050	1750	1080	2370
		N090	1050	1750	1070	1780
		D090	1050	1750	1070	1780
048 (4.0)	DNZ	N065	1200	2000	1080	2370
		N090	1200	2000	1230	2290
		D090	1200	2000	1230	2290
		N110	1200	2000	1330	2220
		D110	1200	2000	1330	2220
060 (5.0)	DNZ	N065	1500	2100	1080	2370
		N090	1500	2100	1230	2290
		D090	1500	2100	1230	2290
		N110	1500	2100	1330	2220
		D110	1500	2100	1330	2220

Indoor Blower Specifications

Size (Tons)	Model	Motor				
		HP	RPM	Eff.	SF	Frame
024 (2.0)	DNZ	1/2	Variable	0.8	1.0	48
030 (2.5)	DNZ	3/4	Variable	0.8	1.0	48
036 (3.0)	DNZ	3/4	Variable	0.8	1.0	48
042 (3.5)	DNZ	3/4	Variable	0.8	1.0	48
048 (4.0)	DNZ	1	Variable	0.8	1.0	48
060 (5.0)	DNZ	1	Variable	0.8	1.0	48

Sound Performance

Outdoor Sound Power Levels

Size (Tons)	Model	Sound Rating[1] dB (A)	Octave Band Centerline Frequency (Hz)						
			125	250	500	1000	2000	4000	8000
024 (2.0)	DNZ	77	64	65.5	68	72.5	64.5	60.5	48.5
030 (2.5)	DNZ	74	63.5	64.5	66.5	67	63	57.5	51.5
036 (3.0)	DNZ	74	66.5	66.5	69.5	68	63	59	49.5
042 (3.5)	DNZ	79	70	70.5	73.5	73	69.5	67	66
048 (4.0)	DNZ	79	70.5	71	73.5	73	70	66	66
060 (5.0)	DNZ	80	73	71.5	74.5	75	70.5	67	62.5

1. Rated in accordance with AHRI 270 standard.

Electrical Data

DNZ024-060 Gas Heat

Size (Tons) DNZ	Volt	Compressors (each)			OD Fan Motors (each)	Supply Blower Motor	MCA[1] (Amps)	Max Fuse[2]/ Breaker[3] Size (Amps)
		RLA	LRA	MCC	FLA	FLA		
024 (2.0)	208/230-1-60	9.3	43	15	1.4	4.1	17.1	25
030 (2.5)	208/230-1-60	13.1	74	21	1.3	6.0	23.7	30
	208/230-3-60	8.6	68	14	1.3	6.0	18.1	25
	460-3-60	4.5	34	7	0.75	3.0	8.6	15
036 (3.0)	208/230-1-60	14.7	74	23	1.3	6.0	25.7	35
	208/230-3-60	9.1	68	14	1.3	6.0	18.7	25
	460-3-60	4.5	34	7	0.8	3.0	9.4	15
042 (3.5)	208/230-1-60	15.7	88	25	1.7	6.0	27.3	35
	208/230-3-60	9.3	68	15	1.7	6.0	19.3	25
	460-3-60	5.1	34	8	1.0	3.0	10.4	15
048 (4.0)	208/230-1-60	20.5	115	32	1.7	7.6	34.9	45
	208/230-3-60	16.0	120	25	1.7	7.6	29.3	40
	460-3-60	7.7	50	12	1.0	3.8	14.4	20
060 (5.0)	208/230-1-60	26.2	150	41	2.3	7.6	42.7	60
	208/230-3-60	17.9	120	28	2.3	7.6	32.3	40
	460-3-60	9.6	70	15	1.3	3.8	17.1	25

1. Minimum Circuit Ampacity.
2. Maximum Over Current Protection per standard UL 1995.
3. Fuse or HACR circuit breaker size installed at factory or field installed.

Typical DNZ024-060 Wiring Diagrams

Typical DNZ024-060 Cooling Unit with Single Stage Gas Heat 208/230-1-60 volt Wiring Diagram

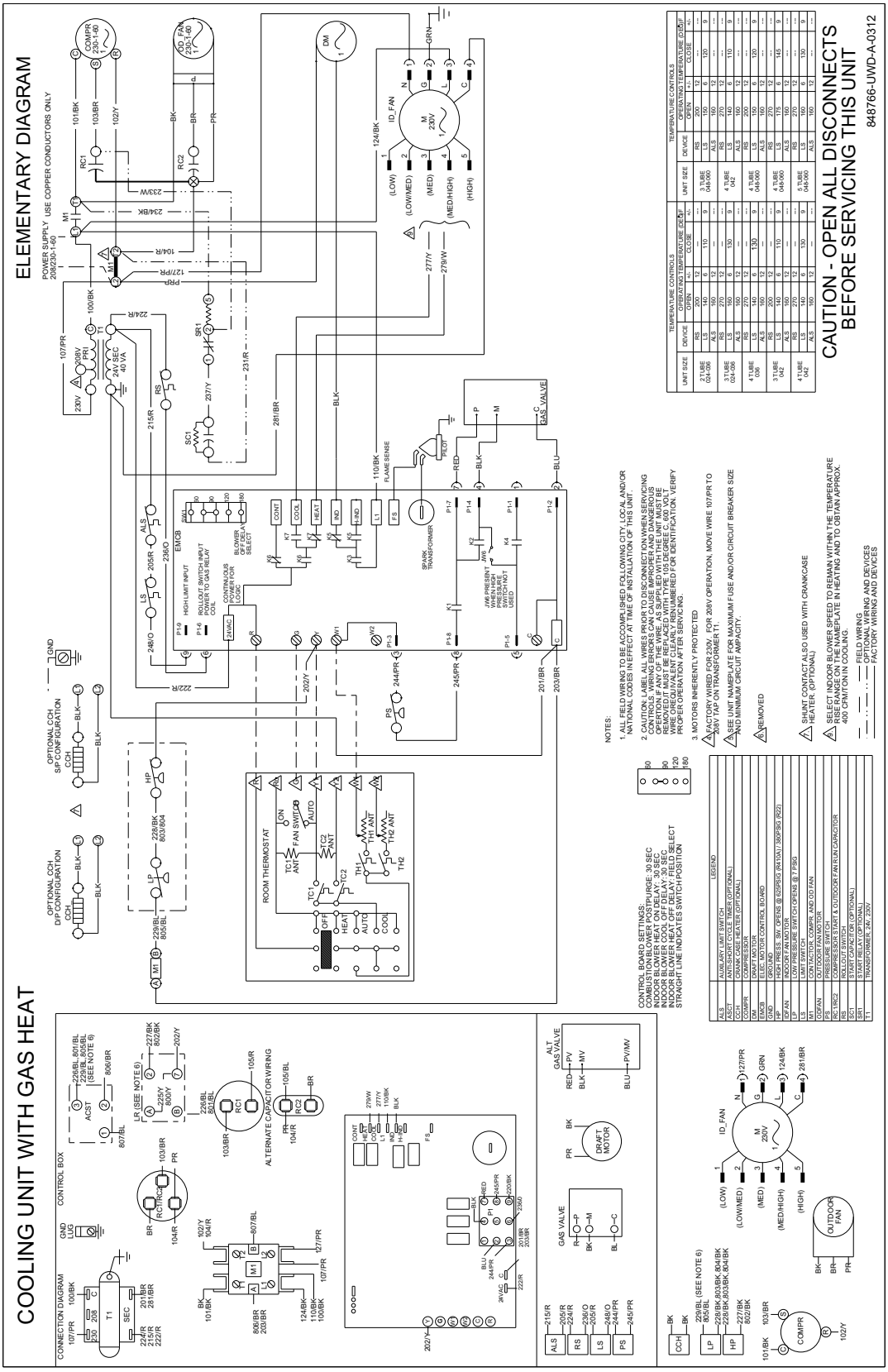

Typical DNZ024-060 Cooling Unit with Two Stage Gas Heat 208/230-1-60 volt Wiring Diagram

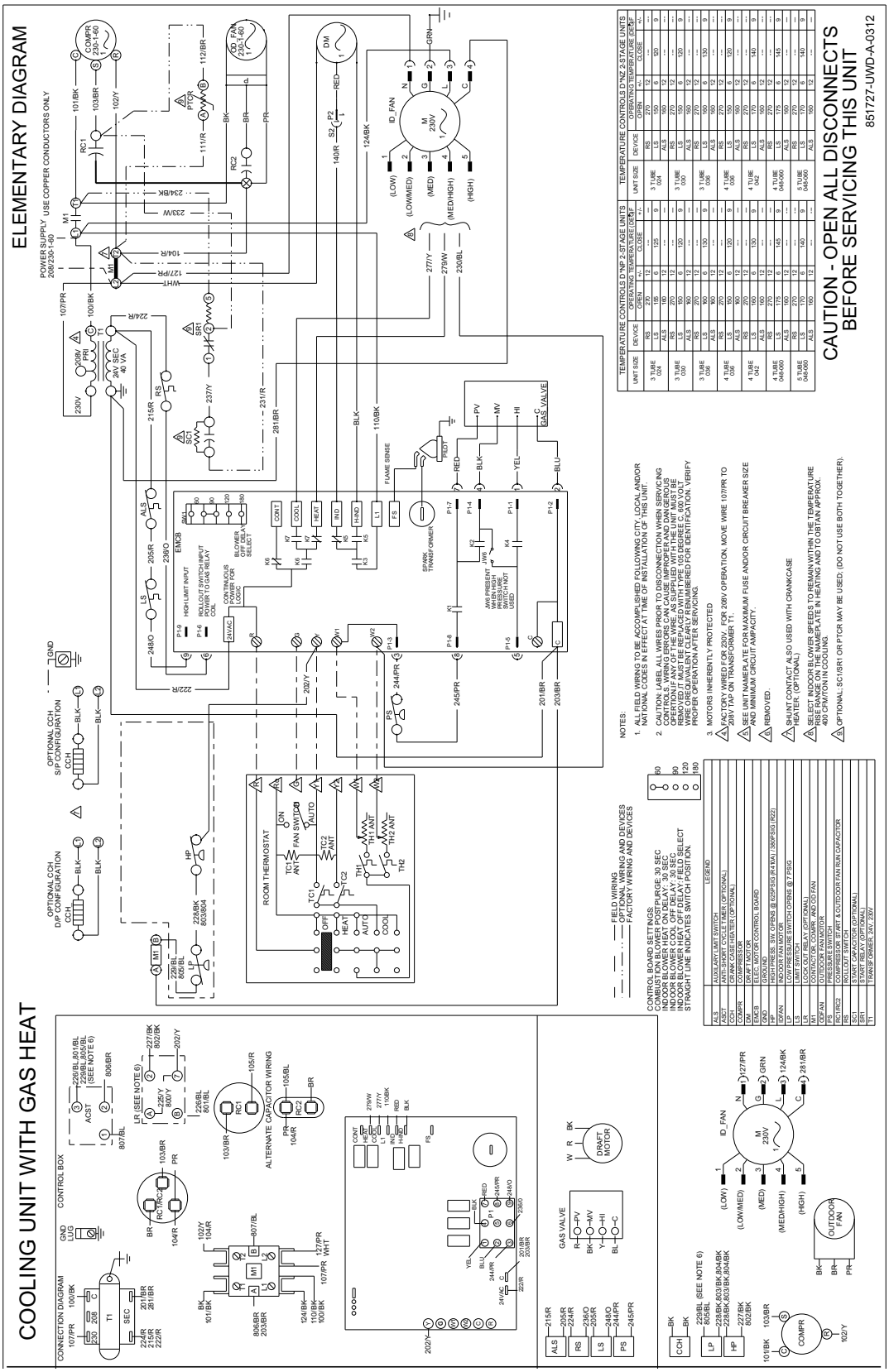

Typical DNZ030-060 Cooling Unit with Single Stage Gas Heat 208/230-3-60 volt Wiring Diagram

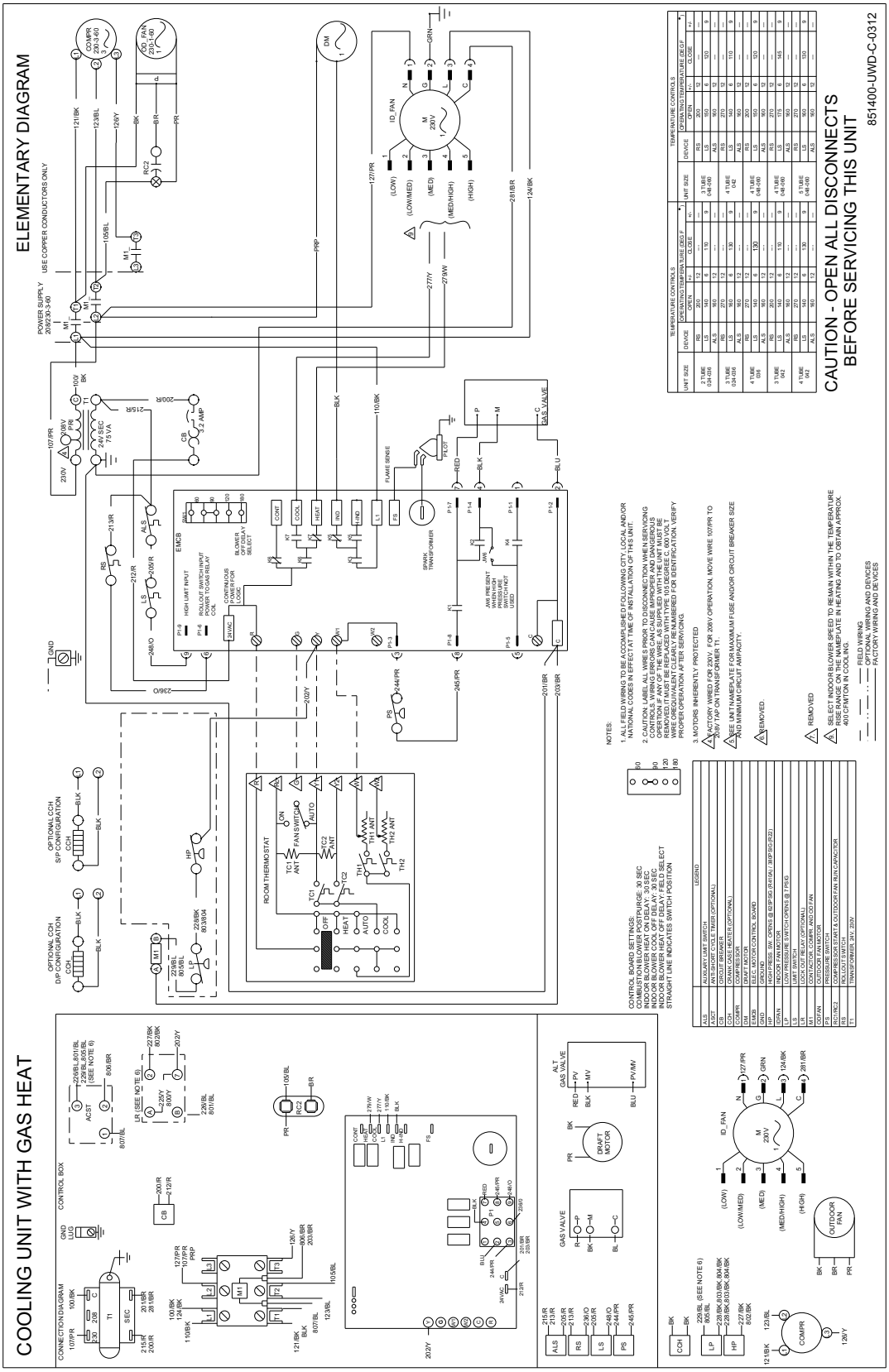

Typical DNZ030-060 Cooling Unit with Single Stage Gas Heat 460-3-60 volt Wiring Diagram

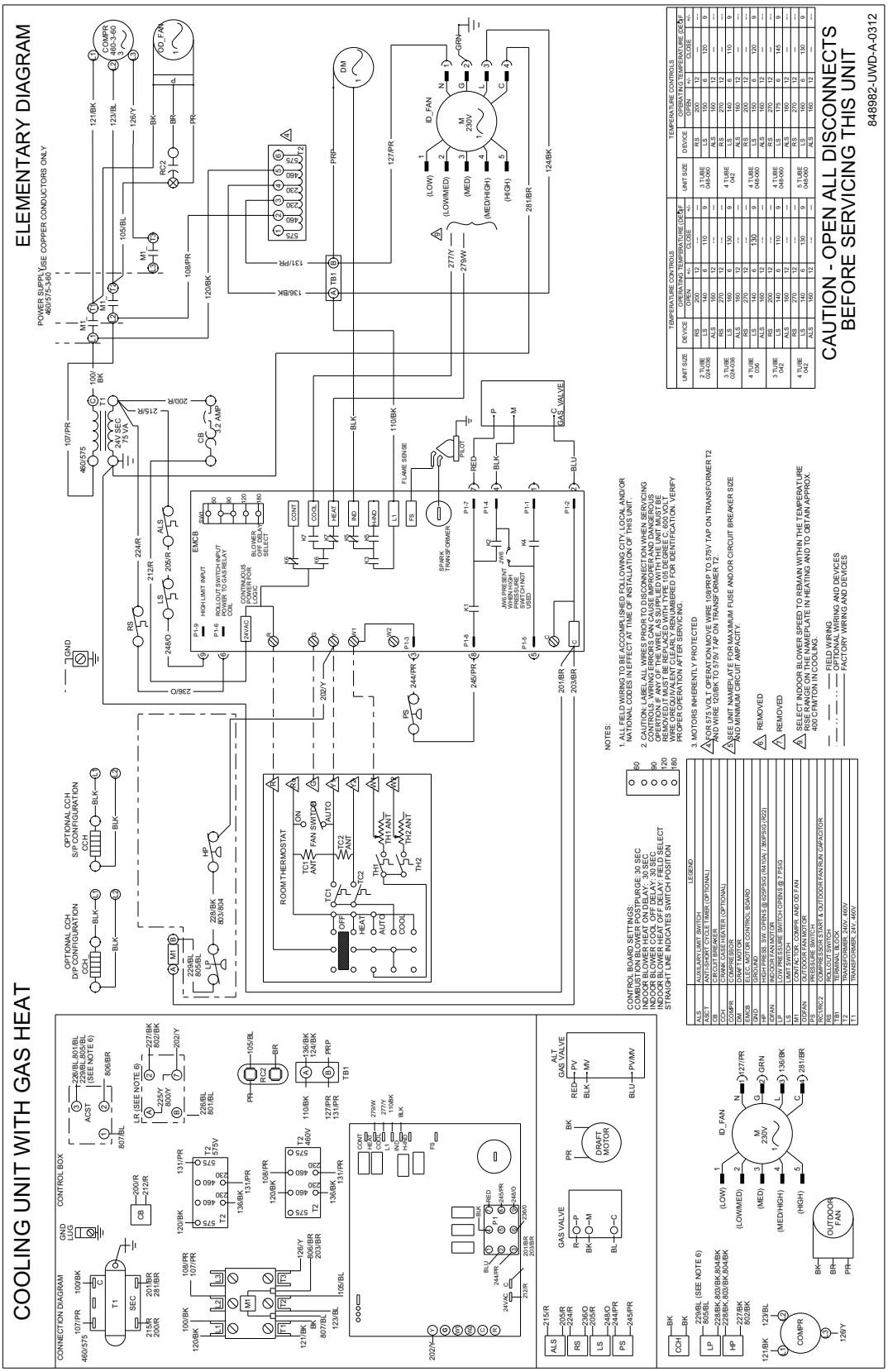

Weights and Dimensions

DNZ Unit Weights

Unit 4 Point Load Weight

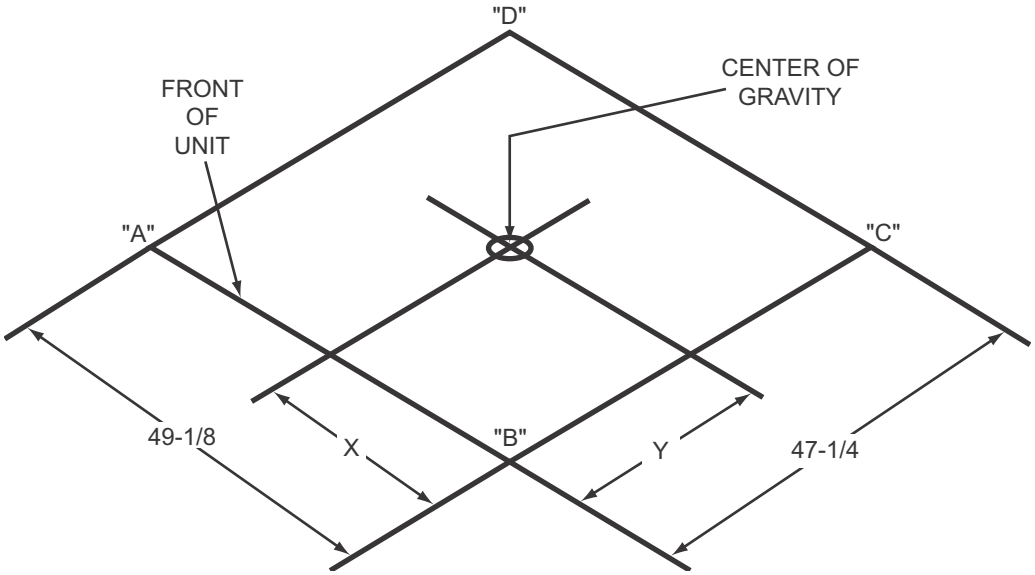

Size (Tons)	Model	Weight (lbs.)		Center of Gravity		4 Point Load Location (lbs.)			
		Shipping	Operating	X	Y	A	B	C	D
024 (2.0)	DNZ	383	378	23.8	20	77	77	112	112
030 (2.5)	DNZ	403	398	24	20	81	81	119	117
036 (3.0)	DNZ	407	402	24	20	81	82	120	119
042 (3.5)	DNZ	465	460	22.7	21.3	105	95	124	137
048 (4.0)	DNZ	470	465	22.7	21.3	106	96	125	138
060 (5.0)	DNZ	485	480	23	21	106	99	132	142

Gas Unit Dimensions

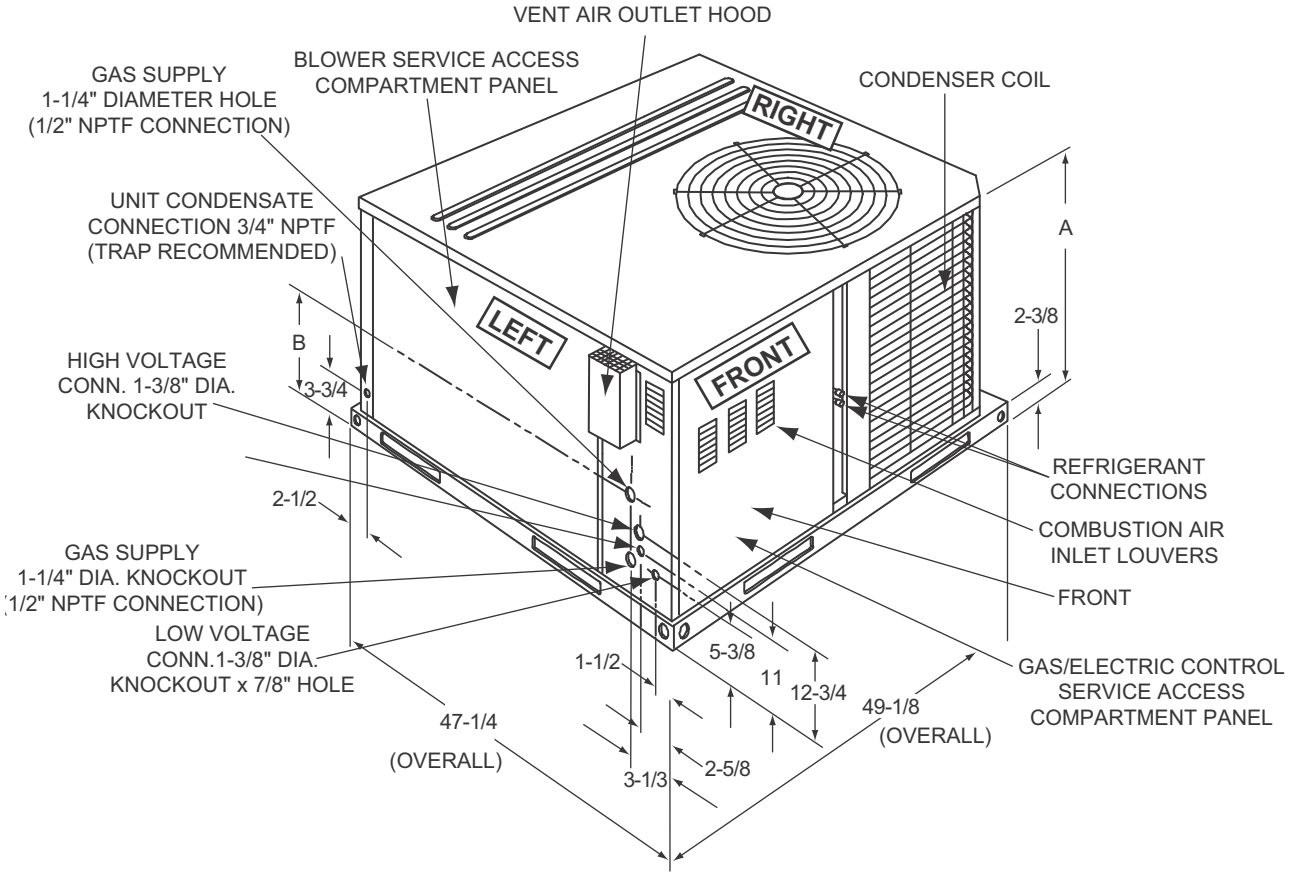

Gas Unit Dimensions

Unit Size	Dimensions	
	"A"	"B"
024, 030, 036	33-1/2	18-1/4
042, 048, 060	41-1/2	23-1/8

Gas Unit Clearances[1 2]

Direction	Distance (in.)	Direction	Distance (in.)
Top[3]	36	Right	12
Front	36	Left	24
Rear	0	Bottom[4]	0

1. A 1" clearance must be provided between any combustible material and the supply air duct work.
2. The products of combustion must not be allowed to accumulate within a confined space and recirculate.
3. Units must be installed outdoors. Over hanging structure or shrubs should not obscure condenser air discharge outlet.
4. Units may be installed on combustable floors made from wood or class A, B or C roof covering materials.

Unit Accessory Weights

Unit Accessory	Model	Weight (lbs.)	
		Shipping	Operating
Add Economizer	All	45	40

Unit Dimensions Front and Bottom

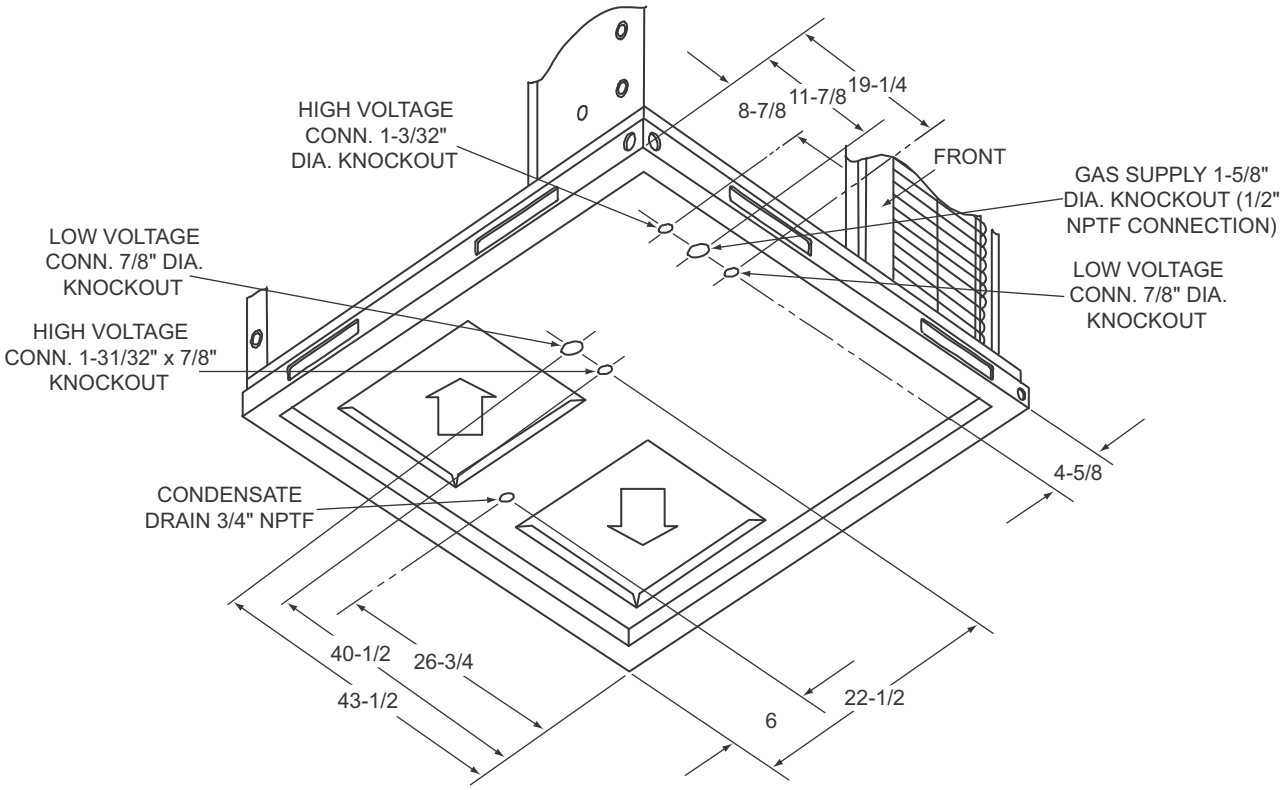

Unit Dimensions Back and Bottom

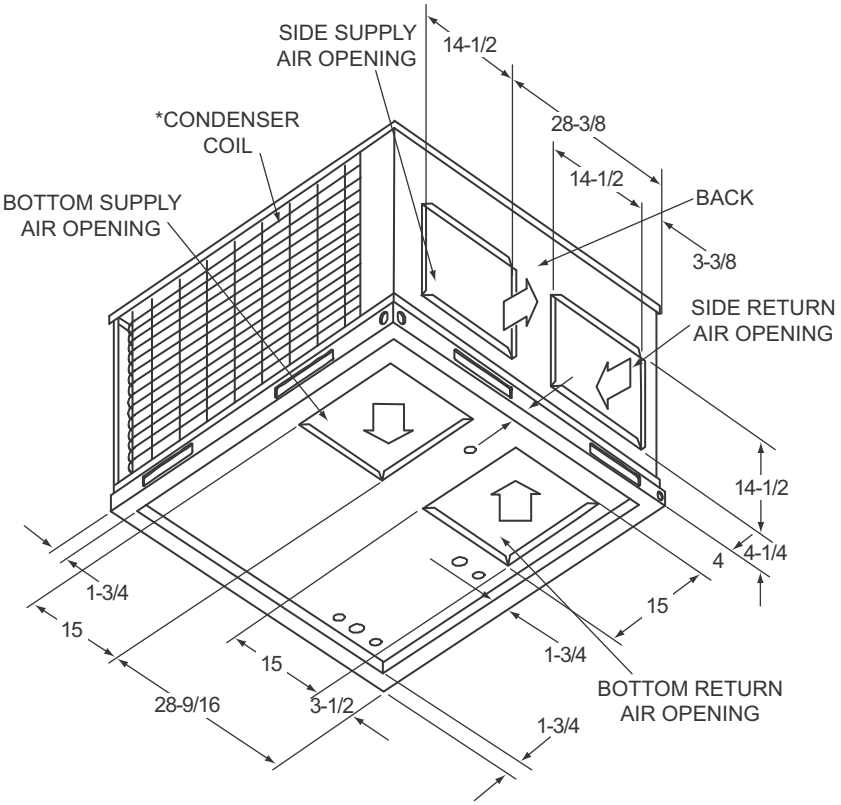

Unit Typical Duct Applications

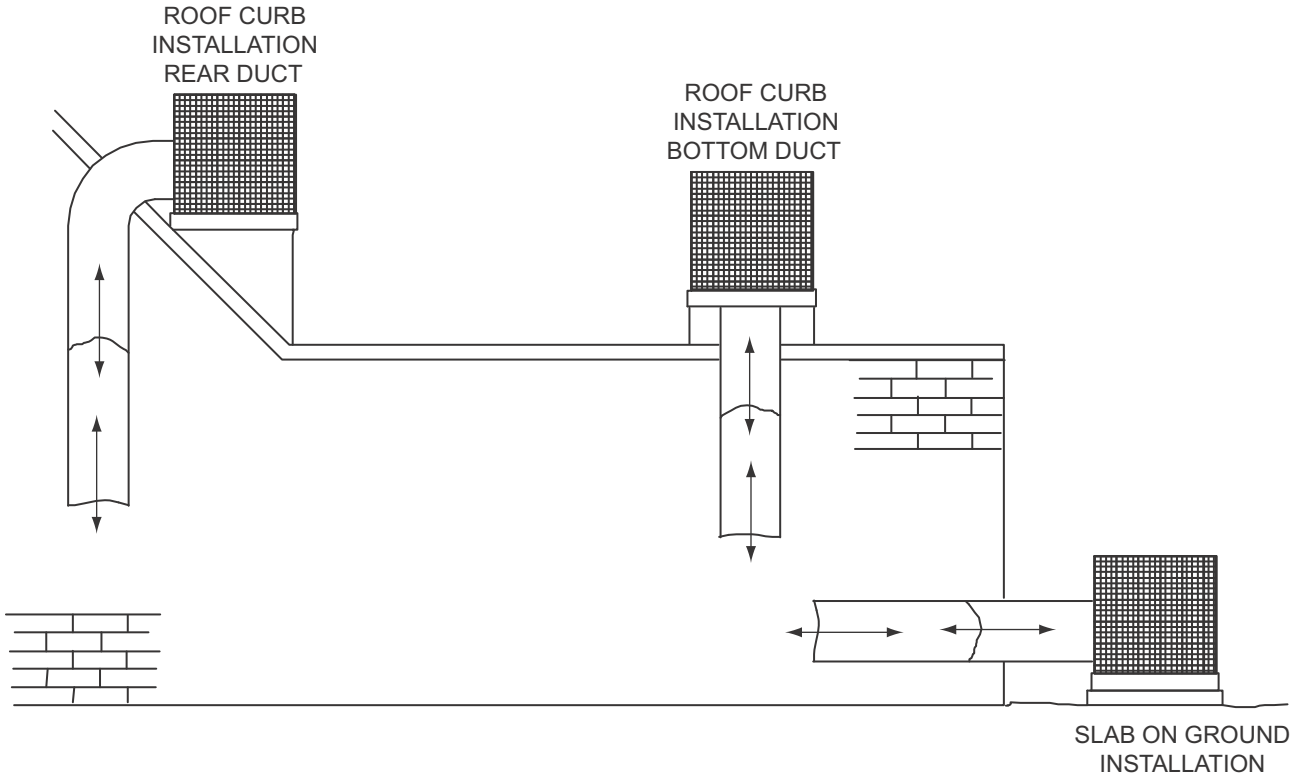

Unit Typical Slab on Ground Installation (Gas Model Shown)

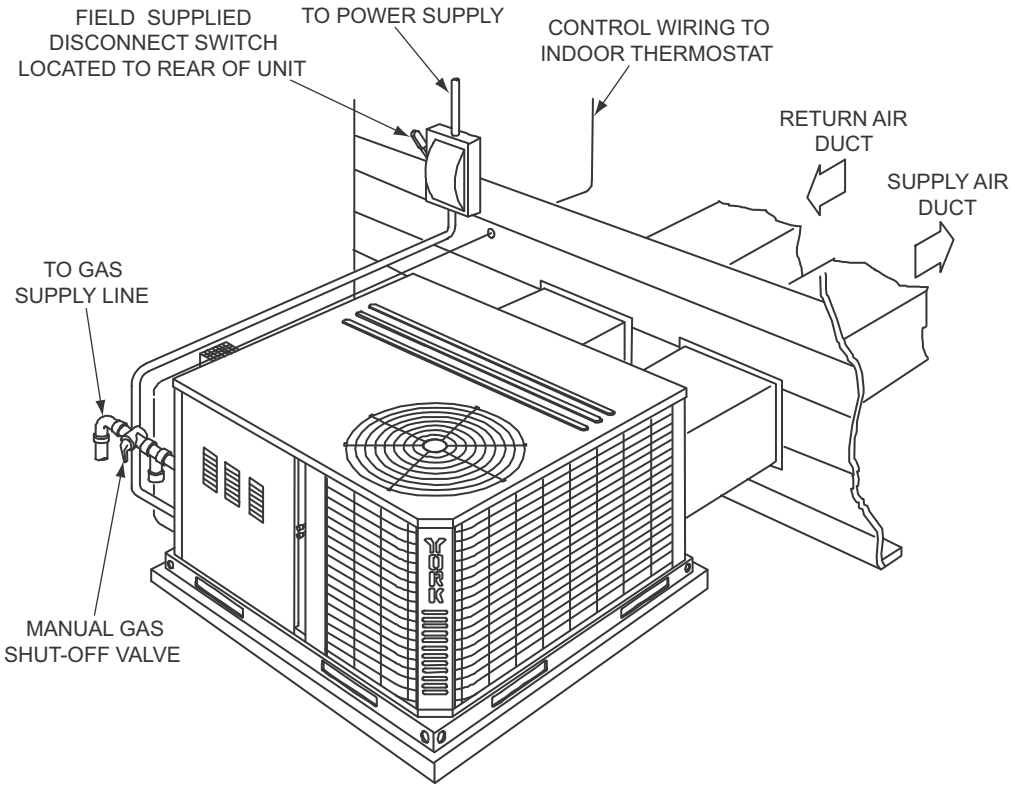

Unit Typical Roof Curb Installation (Gas Model Shown)

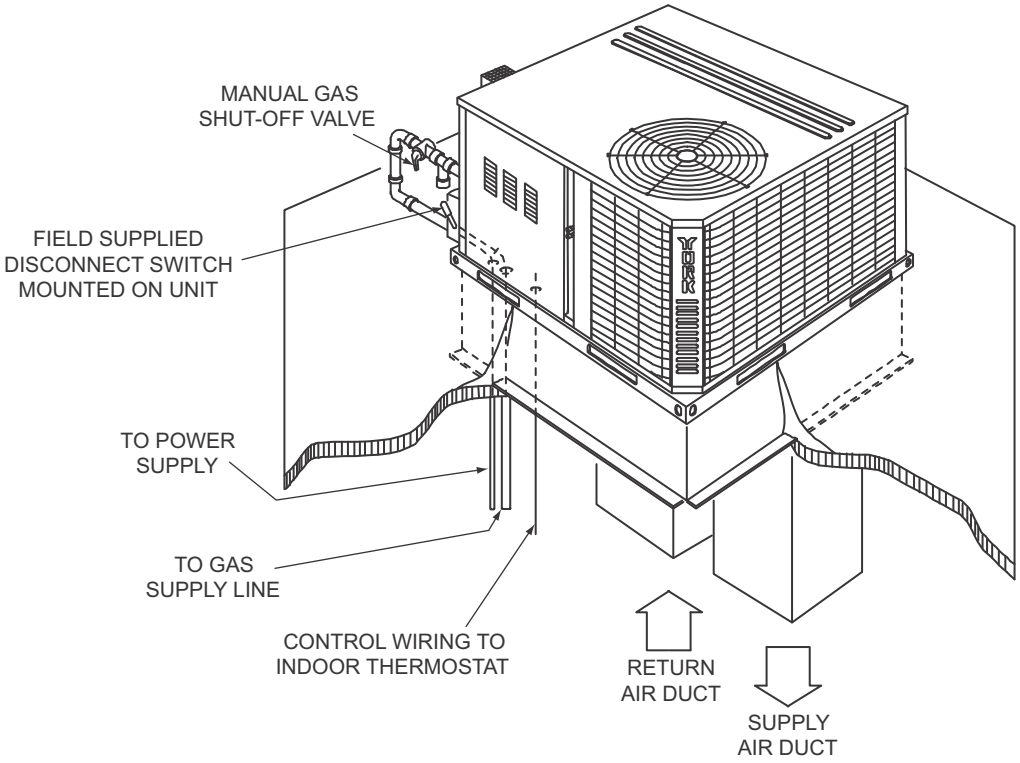

Unit Accessory Dimensions

Roof Curb[1]

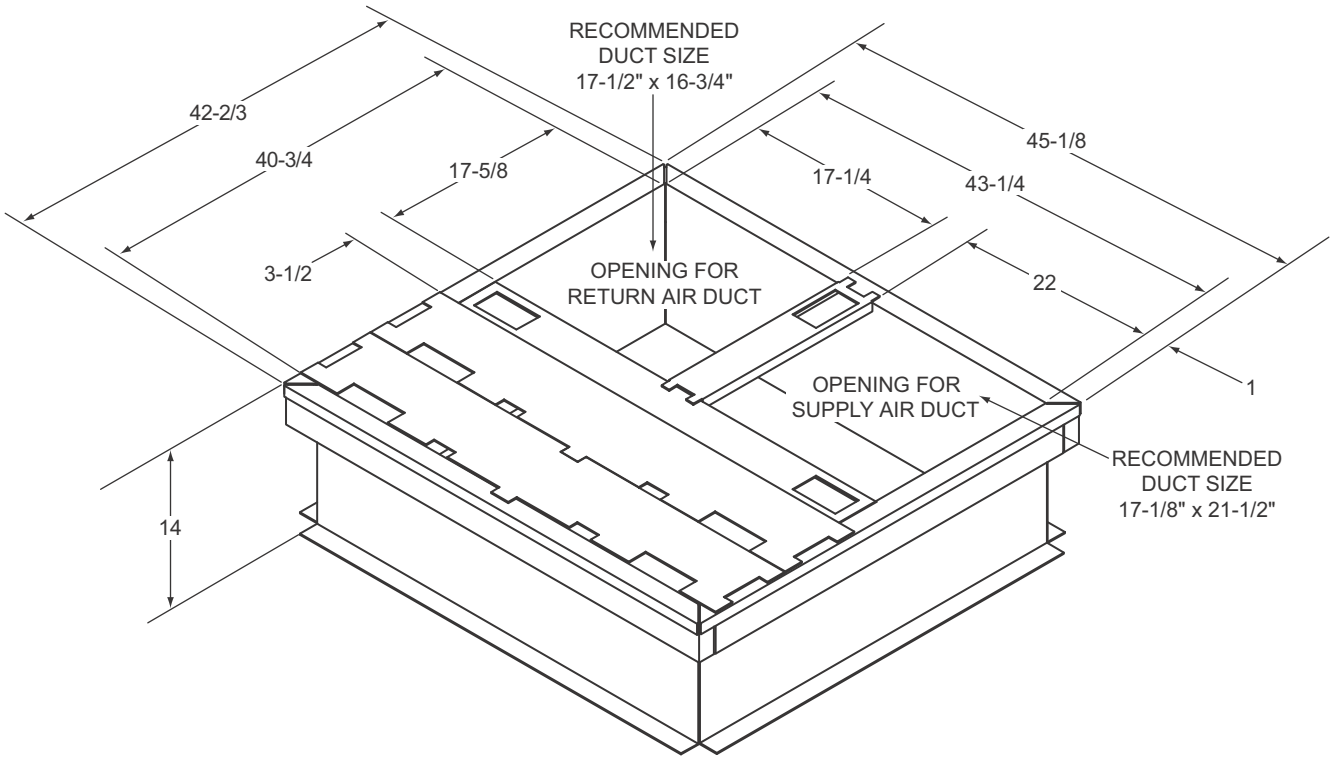

1. 8” Roof Curb also available.

Roof Curb Cross Section

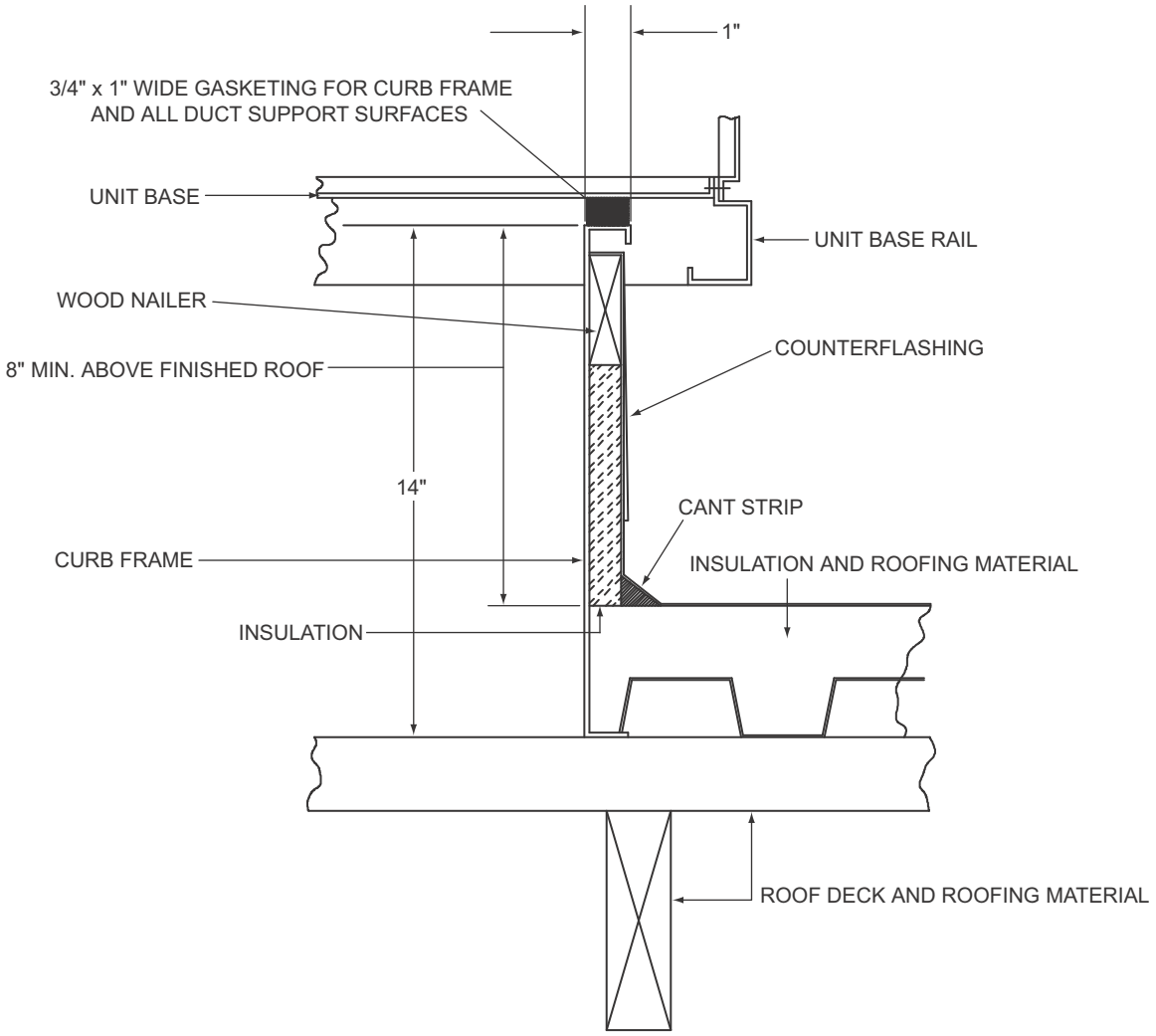

Subject to change without notice. Printed in U.S.A.
Copyright © 2012 by Johnson Controls, Inc. All rights reserved.

718444-YTG-B-0412
Supersedes: 718444-YTG-A-0811

York International Corporation
5005 York Drive
Norman, OK 73069