YORK®
Heating and Air Conditioning

# *TECHNICAL GUIDE*

## LATITUDE™ SERIES
## SPLIT-SYSTEM AIR CONDITIONERS
## 13 SEER – R-410A – 1 PHASE
## (1.5 THRU 5 NOMINAL TONS)
## MODELS: TCGD18 THRU 60

AHRI CERTIFIED™ www.ahridirectory.org Unitary Small AC AHRI Standard 210/240 Certification applies only when the complete system is listed with AHRI

ISO 9000 REGISTRATION
ISO 9001
Certified Quality
Management System

C US

LIMITED WARRANTY TO CONSUMERS Good Housekeeping Promises REPLACEMENT OR REFUND IF DEFECTIVE

**Due to continuous product improvement, specifications are subject to change without notice.**

**Visit us on the web at**
***www.upgnet.com and www.york.com***
**Additional rating information can be found at:**
***www.ahridirectory.org***

**WARRANTY SUMMARY***

Standard 5-Years limited parts warranty.

Standard 5-Years limited compressor warranty.

**Extended 10-Years limited parts and compressor warranty** when product is registered online within 90 days of purchase for replacement or closing for new home construction.

*Does not apply to R-22 models, 3-Phase models, or internet sales.
See Limited Warranty certificate in User's Information Manual for details.

## DESCRIPTION

The 13 SEER Series unit is the outdoor part of a versatile climate system. It is designed with a matching indoor coil component from Johnson Controls Unitary Products. Available for typical applications this climate system is supported with accessories and documents to serve specific functions.

## FEATURES

- **Small Footprint** - Extremely lightweight with a compact footprint, it is a perfect fit for any application.
- **Quality Condenser Coils -** The coil is constructed of aluminum microchannel tubing and enhanced aluminum fins for reduced size and increased efficiency.
- **Coil Protection** - Coils are protected from damage by a sturdy polymer mesh and a coated steel wire coil guard.
- **Optional Factory E-Coat -** Available ElectroFin® coated coil on select models.
- **Protected Compressor -** Compressors are protected internally by a high pressure relief valve and a temperature sensor, and externally by the system high pressure switch. A factory installed liquid line filter-drier further protects the compressor against moisture and debris.
- **Environmentally Friendly Refrigerant -** The next generation refrigerant R-410A delivers environmentally friendly performance with zero ozone depletion.
- **Durable Finish -** The cabinet is made of G90-equivalent prepainted steel, with special primer formulas and matte champagne texture to insure less fading when exposed to sunlight. The coated steel wire fan and coil guards and pretreated, galvanized steel chassis components resist corrosion and rust creep.
- **Lower Installed Cost -** Installation time and costs are reduced by easy power and control wiring connections. The unit is factory charged for a 15-foot lineset. The small base dimension means less space is required on the ground or roof.
- **Top Discharge -** Warm air from the top mounted fan is blown up, away fro0m the structure and any landscaping. This allows compact location on multi-unit applications.
- **Competitive Sound Levels -** The upward air flow carries the normal operating noise away from the living area. The rigid top panel effectively isolates any motor sound. Isolator mounted compressor and the condenser coil muffle the normal fan motor and compressor operating sounds.
- **Low Maintenance -** Long life, permanently lubricated motor-bearings need no annual servicing.
- **Easy Service Access -** Fully exposed refrigerant connections and a single panel covering the electrical controls make for easy servicing of the unit.
- **Secured Service Valves -** Secured, re-usable service valves are provided on both the liquid and vapor sweat connections for ease of evacuating and charging.
- **Agency Listed -** Safety certified by CSA to UL 1995 / CSA 22.2. Performance certified to ANSI/AHRI Standard 210/240 in accordance with the Unitary Small Equipment certification program.

## Physical and Electrical Data

| MODEL | | TCGD18 S41S3(H)(E) | TCGD24 S41S3(H)(E) | TCGD30 S41S3(H)(E) | TCGD36 S41S3(H)(E) | TCGD42 S41S4(H)(E) | TCGD48 S41S3(H)(E) | TCGD60 S41S3(E) |
|---|---|---|---|---|---|---|---|---|
| Unit Supply Voltage | | 208-230V, 1ϕ, 60Hz | | | | | | |
| Normal Voltage Range [1] | | 187 to 252 | | | | | | |
| Minimum Circuit Ampacity | | 10.0 | 12.4 | 14.7 | 17.9 | 21.5 | 21.1 | 34.3 |
| Max. Overcurrent Device Amps [2] | | 15 | 20 | 25 | 30 | 35 | 35 | 60 |
| Min. Overcurrent Device Amps [3] | | 15 | 15 | 15 | 20 | 25 | 25 | 35 |
| Compressor Type | | Rotary | Recip | Recip | Recip | Recip | Recip | Scroll |
| Compressor Amps | Rated Load | 7.6 | 9.3 | 10.6 | 13.1 | 16 | 15.7 | 26.2 |
| | Locked Rotor | 40 | 43 | 54 | 74 | 88 | 84 | 150 |
| Crankcase Heater | | No | No | No | No | No | No | No |
| Factory External Discharge Muffler | | No | No | No | No | No | Yes | No |
| Factory External Check Valve | | No | No | No | No | No | No | No |
| HS Kit Required with TXV [4] | | Yes | Yes | Yes | Yes | Yes | Yes | No |
| Fan Motor Amps | Rated Load | 0.5 | 0.8 | 1.4 | 1.5 | 1.5 | 1.5 | 1.5 |
| Fan Diameter Inches | | 17.5 | 17.5 | 17.5 | 22.0 | 22.0 | 22.0 | 24.0 |
| Fan Motor | Rated HP | 1/12 | 1/8 | 1/4 | 1/4 | 1/4 | 1/4 | 1/4 |
| | Nominal RPM | 1100 | 1075 | 1100 | 850 | 850 | 850 | 850 |
| | Nominal CFM | 1400 | 1950 | 2050 | 3200 | 3050 | 2950 | 3600 |
| Coil | Face Area Sq. Ft. | 9.60 | 9.60 | 9.60 | 13.07 | 14.16 | 14.16 | 18.68 |
| | Rows Deep | 1 | 1 | 1 | 1 | 1 | 1 | 1 |
| | Fin / Inches | 23 | 23 | 23 | 23 | 23 | 23 | 23 |
| Liquid Line Set OD (Field Installed) | | 3/8 | 3/8 | 3/8 | 3/8 | 3/8 | 3/8 | 3/8 |
| Vapor Line Set OD (Field Installed) | | 5/8 | 3/4 | 3/4 | 3/4 | 7/8 | 7/8 | 7/8 |
| Unit Charge (Lbs. - Oz.) [5] | | 3 - 3 | 3 - 13 | 3 - 14 | 4 - 9 | 4 - 10 | 4 - 9 | 5 - 6 |
| Charge Per Foot, Oz. | | 0.58 | 0.62 | 0.62 | 0.62 | 0.67 | 0.67 | 0.67 |
| Operating Weight Lbs. | | 97 | 129 | 131 | 145 | 164 | 173 | 195 |

**Models with "H" on the end of the model number are shipped with a Hard Start Kit installed at the factory.**

**Models with “E” on the end of the model number have an ElectroFin® coating on the outdoor coil.**

1. Rated in accordance with AHRI Standard 110-2012, utilization range “A”.
2. Dual element fuses or HACR circuit breaker. Maximum allowable overcurrent protection.
3. Dual element fuses or HACR circuit breaker. Minimum recommended overcurrent protection.
4. See Hard Start Kit Accessory Installation Manual for Hard Start Kit part number for each model.
5. The Unit Charge is correct for the outdoor unit, smallest matched indoor unit, and 15 feet of refrigerant tubing. For tubing lengths other than 15 feet, add or subtract the amount of refrigerant, using the difference in length multiplied by the per foot value.

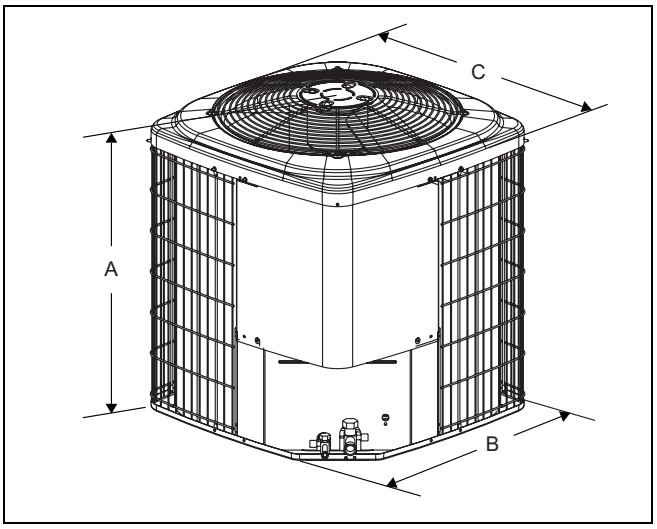


All dimensions are in inches. They are subject to change without notice. Certified dimensions will be provided upon request.

| Unit Model | Dimensions (Inches) | | | Refrigerant Connection Service Valve Size | |
|---|---|---|---|---|---|
| | A[1] | B | C | Liquid | Vapor |
| 18 | 28 | 23-1/2 | 23-1/2 | 3/8” | 3/4” |
| 24 | 28 | 23-1/2 | 23-1/2 | | |
| 30 | 28 | 23-1/2 | 23-1/2 | | |
| 36 | 28 | 29 | 29 | | |
| 42 | 30 | 29 | 29 | | 7/8” |
| 48 | 30 | 29 | 29 | | |
| 60 | 32 | 33-5/8 | 33-5/8 | | |

1. Overall height from bottom of base pan to top of fan guard.

| System Charge for Various Matched Systems | | | | | | | |
|---|---|---|---|---|---|---|---|
| **Outdoor Unit** | TCGD18 S41S3(H)(E) | TCGD24 S41S3(H)(E) | TCGD30 S41S3(H)(E) | TCGD36 S41S3(H)(E) | TCGD42 S41S4(H)(E) | TCGD48 S41S3(H)(E) | TCGD60 S41S3(E) |
| **Required Orifice or TXV [1,2]** | 0.048/4F1 | 0.055/4F1 | 0.061/4F1 | 0.065/4G1 | 0.073/4G1 | 0.073/4H1 | 0.087/4J1 |
| **Indoor Unit [3,4,5]** | **Additional Charge, oz.** | | | | | | |
| AHE18B | 0 | – | – | – | – | – | – |
| AHE24B | – | 4 | – | – | – | – | – |
| AHE30B | – | 4 | 0 | – | – | – | – |
| AHE36C | – | 4 | 2 | 0 | – | – | – |
| AHE42D | – | – | – | 8 | 10 | – | – |
| AHE48D | – | – | – | – | 9 | 0 | – |
| AHE60D | – | – | – | – | 14 | – | 4 |
| AHP18 | 0 | – | – | – | – | – | – |
| AHP30 | – | 4 | 0 | – | – | – | – |
| AHP36 | – | – | 2 | 0 | – | – | – |
| AHP42 | – | – | – | 0 | 0 | – | – |
| AHP48 | – | – | – | – | 10 | 0 | – |
| AHP60 | – | – | – | – | 10 | 0 | 0 |
| AHR18B | 0 | – | – | – | – | – | – |
| AHR24B | – | 4 | – | – | – | – | – |
| AHR30B | – | – | 0 | – | – | – | – |
| AHR36B | – | – | 2 | 0 | – | – | – |
| AHR42C | – | – | – | 8 | 10 | – | – |
| AHR48D | – | – | – | – | 9 | 0 | – |
| AHR60D | – | – | – | – | 15 | – | 4 |
| AHX18 | 0 | – | – | – | – | – | – |
| AHX30 | – | 4 | 0 | – | – | – | – |
| AHX36 | – | 4 | 2 | 0 | – | – | – |
| AHX42 | – | – | – | 8 | 10 | – | – |
| AHX48 | – | – | – | – | 9 | 0 | – |
| AHX60 | – | – | – | – | 15 | – | 4 |
| AV*24 | TXV + 0 | – | – | – | – | – | – |
| AV*36 | – | 4 | 2 | 0 | – | – | – |
| AV*48 | – | – | – | – | TXV + 10 | 0 | – |
| AV*60 | – | – | – | – | TXV + 10 | 0 | 0 |
| F4FP024 | 0 | – | – | – | – | – | – |
| F4FP036 | – | 0 | – | – | – | – | – |
| F4FP040 | – | – | 0 | – | – | – | – |
| F4FV060 | – | – | – | – | – | 0 | 0 |
| F5FP048 | – | – | – | 8 | – | 4 | – |
| F5FP060 | – | – | – | – | – | 0 | 0 |
| F6FP018 | 0 | – | – | – | – | – | – |
| F6FP030 | – | 4 | 0 | – | – | – | – |
| F6FP036 | – | 4 | 0 | – | – | – | – |
| F6FP042 | – | – | – | 8 | 4 | – | – |
| F6FP048 | – | – | – | – | TXV + 9 | 0 | – |
| F6FP060 | – | – | – | – | 15 | – | 4 |
| FC/MC/PC18 | 0 | – | – | – | – | – | – |
| FC/MC/PC32 | – | 4 | 0 | – | – | – | – |
| FC/MC/PC35 | – | 4 | 0 | – | – | – | – |
| FC/MC/PC36 | – | 0 | – | – | – | – | – |
| FC/MC/PC37 | – | 4 | 2 | 0 | – | – | – |

For Notes See Page 4.

| System Charge for Various Matched Systems (Continued) | | | | | | | |
|---|---|---|---|---|---|---|---|
| **Outdoor Unit** | TCGD18 S41S3(H)(E) | TCGD24 S41S3(H)(E) | TCGD30 S41S3(H)(E) | TCGD36 S41S3(H)(E) | TCGD42 S41S4(H)(E) | TCGD48 S41S3(H)(E) | TCGD60 S41S3(E) |
| **Required Orifice or TXV [1,2]** | 0.048/4F1 | 0.055/4F1 | 0.061/4F1 | 0.065/4G1 | 0.073/4G1 | 0.073/4H1 | 0.087/4J1 |
| **Indoor Unit [3,4,5]** | **Additional Charge, oz.** | | | | | | |
| FC/MC/PC43 | – | 4 | 2 | 0 | 0 | – | – |
| FC/MC/PC48 | – | – | – | 8 | 10 | 4 | – |
| FC/MC/PC60 | – | – | – | – | 9 | 0 | 0 |
| FC/MC62 | – | – | – | – | 14 | – | 4 |
| FC64 | – | – | – | – | 23 | – | 11 |
| UC18 | 0 | – | – | – | – | – | – |
| UC36 | – | 0 | – | – | – | – | – |
| UC48 | – | – | – | 8 | 4 | 4 | – |
| UC60 | – | – | – | – | 9 | 0 | 0 |
| Some of the combinations shown in the above System Charge table require Advanced Main Air Circulating Fan indoor product. For approved coil only matches, please see the “COOLING CAPACITY - Upflow, Downflow & Horizontal Furnaces and Coils” table. | | | | | | | |

**FOOTNOTES:**

1. For applications requiring a TXV use S1-1TVM*** series kit.
2. Approved orifice(s) shipped with outdoor unit.
3. Systems matched with furnaces or air handlers not equipped with blower-off delays may require blower Time Delay Kit S1-2FD06700224.
4. PC coils cannot be used in downflow or horizontal applications. FC coils cannot be used in horizontal applications.
5. Refer to Cooling Performance Data tables for actual system performance for specified system matches.

**PROCEDURES:**

1. Unit factory charge listed on the unit nameplate includes refrigerant for the outdoor unit, the smallest matched indoor unit, and 15 feet of interconnecting line tubing.
2. Verify the TXV or orifice and additional charge required for specific matched indoor unit in the system using the above table.
3. Add additional charge for the amount of interconnecting line tubing greater than 15 feet at the rate specified in Physical and Electrical Data Table.
4. For indoor matches requiring additional charge, the refrigerant needs to be weighed in for specific matched indoor unit and lineset length.
5. Permanently mark the unit nameplate with the total system charge. Total System Charge = Base Charge (as shipped) + charge adder for matched indoor unit + charge adder for line set.

**IMPORTANT**

*Models 12-48 require Hard Start Kits for TXV matches. Models with “H” on the end of the model number have factory installed Hard Start Kits. For models without an “H” refer to the Hard Start Kit Accessory Installation Manual for the Hard Start Kit part number for each model.*

## COOLING CAPACITY - With Air Handler Coils

| UNIT MODEL | AIR HANDLER | | COIL MODEL[1] | COOLING | | | | |
|---|---|---|---|---|---|---|---|---|
| | MODEL | WIDTH | | RATED CFM | NET MBH | | SEER | EER |
| | | | | | TOTAL | SENS. | | |
| **13 SEER AC WITH AIR HANDLERS** | | | | | | | | |
| TCGD18S41S3(H)(E) | AHE18B | 17.5 | – | 610 | 17.9 | 13.8 | 14.75 | 12.25 |
| | AHP18 | 17.5 | – | 650 | 17.5 | 12.9 | 13.00 | 11.00 |
| | AHR18B | 17.5 | – | 665 | 17.8 | 13.8 | 13.00 | 11.00 |
| | AHX18 | 17.5 | - | 630 | 18.0 | 13.8 | 14.50 | 12.00 |
| | AV*24 | 17.5 | – | 610 | 18.0 | 13.5 | 14.50 | 12.00 |
| | F4FP024 | 17.5 | – | 600 | 17.5 | 12.9 | 13.00 | 11.00 |
| | F6FP018 | 17.5 | - | 600 | 17.8 | 13.3 | 14.50 | 12.00 |
| | MV12B | 17.5 | FC/MC18B | 600 | 17.5 | 13.3 | 14.00 | 12.50 |
| | MX12B | 17.5 | FC/MC18B | 585 | 17.9 | 13.5 | 14.75 | 12.50 |
| TCGD24S41S3(H)(E) | AHE24B | 17.5 | – | 795 | 24.4 | 17.4 | 14.50 | 12.00 |
| | AHE30B | 17.5 | – | 795 | 24.4 | 17.4 | 14.50 | 12.00 |
| | AHE36C | 21.0 | – | 855 | 25.2 | 18.5 | 15.00 | 12.50 |
| | AHP30 | 17.5 | – | 795 | 24.0 | 16.8 | 13.00 | 11.00 |
| | AHR24B | 17.5 | – | 740 | 23.8 | 16.5 | 13.00 | 11.00 |
| | AHX30 | 17.5 | – | 820 | 24.0 | 16.9 | 14.50 | 12.00 |
| | AHX36 | 21.0 | – | 815 | 24.0 | 16.9 | 14.50 | 12.00 |
| | AV*36 | 21.0 | – | 725 | 24.0 | 17.4 | 14.00 | 12.00 |
| | F4FP036 | 21.0 | – | 855 | 24.0 | 16.7 | 13.00 | 11.00 |
| | F6FP030 | 21.0 | – | 850 | 24.0 | 16.8 | 14.00 | 11.80 |
| | F6FP036 | 21.0 | – | 855 | 24.0 | 17.0 | 14.00 | 12.00 |
| | MV12B | 17.5 | FC/MC35B | 800 | 24.0 | 17.4 | 14.00 | 12.00 |
| | MV12B | 17.5 | FC/MC36B | 800 | 24.0 | 17.4 | 14.00 | 12.00 |
| | MV12B | 17.5 | FC/MC43B | 800 | 24.0 | 17.3 | 14.00 | 12.00 |
| | MX12B | 17.5 | FC/MC35B | 815 | 24.8 | 17.4 | 15.00 | 12.50 |
| | MX12B | 17.5 | FC/MC36B | 745 | 24.2 | 16.9 | 14.75 | 12.25 |
| | MX12B | 17.5 | FC/MC43B | 735 | 24.6 | 17.1 | 14.75 | 12.50 |
| TCGD30S41S3(H)(E) | AHE30B | 17.5 | – | 985 | 29.4 | 21.4 | 14.00 | 11.75 |
| | AHE36C | 21.0 | – | 1000 | 30.2 | 22.0 | 14.75 | 12.25 |
| | AHP30 | 17.5 | – | 1015 | 29.0 | 21.0 | 13.00 | 11.00 |
| | AHP36 | 21.0 | – | 1040 | 29.0 | 21.0 | 13.00 | 11.00 |
| | AHR30B | 17.5 | – | 1095 | 29.4 | 22.2 | 13.00 | 11.00 |
| | AHR36B | 17.5 | – | 1060 | 29.8 | 22.0 | 13.00 | 11.00 |
| | AHX30 | 17.5 | – | 1025 | 29.4 | 22.2 | 14.00 | 11.75 |
| | AHX36 | 21.0 | – | 1005 | 30.0 | 22.3 | 14.50 | 12.00 |
| | AV*36 | 21.0 | – | 960 | 30.0 | 21.8 | 14.50 | 12.00 |
| | F4FP040 | 21.0 | – | 1050 | 29.0 | 21.0 | 13.00 | 11.00 |
| | F6FP030 | 21.0 | – | 1035 | 29.2 | 21.6 | 13.60 | 11.40 |
| | F6FP036 | 21.0 | – | 980 | 29.4 | 21.4 | 14.00 | 12.00 |
| | MV12B | 17.5 | FC/MC35B | 1000 | 29.0 | 21.6 | 14.00 | 12.00 |
| | MV12B | 17.5 | FC/MC43B | 1000 | 29.0 | 21.6 | 14.00 | 12.00 |
| | MV16C | 21.0 | FC/MC35C | 1000 | 30.0 | 21.6 | 14.00 | 12.00 |
| | MV16C | 21.0 | FC/MC43C | 1000 | 30.0 | 21.6 | 14.00 | 12.00 |
| | MX12B | 17.5 | FC/MC35B | 1085 | 30.0 | 22.6 | 14.25 | 12.00 |
| | MX12B | 17.5 | FC/MC43B | 1095 | 30.4 | 23.0 | 14.50 | 12.25 |
| | MX16C | 21.0 | FC/MC35C | 1035 | 30.0 | 22.2 | 14.75 | 12.50 |
| | MX16C | 21.0 | FC/MC43C | 970 | 30.2 | 21.8 | 15.00 | 12.50 |

For Notes See Page 7.

## COOLING CAPACITY - With Air Handler Coils (Continued)

| UNIT MODEL | AIR HANDLER | | COIL MODEL[1] | COOLING | | | | |
|---|---|---|---|---|---|---|---|---|
| | MODEL | WIDTH | | RATED CFM | NET MBH | | SEER | EER |
| | | | | | TOTAL | SENS. | | |
| **13 SEER AC WITH AIR HANDLERS** | | | | | | | | |
| TCGD36S41S3(H)(E) | AHE36C | 21.0 | – | 1190 | 35.6 | 25.4 | 14.25 | 12.00 |
| | AHE42D | 24.5 | – | 1180 | 35.8 | 25.8 | 14.50 | 12.25 |
| | AHP36 | 21.0 | – | 1235 | 35.0 | 24.8 | 13.00 | 11.00 |
| | AHP42 | 21.0 | – | 1255 | 35.0 | 24.8 | 13.00 | 11.00 |
| | AHR36B | 17.5 | – | 1245 | 34.6 | 24.6 | 13.00 | 11.00 |
| | AHR42C | 21.0 | – | 1230 | 35.6 | 25.4 | 13.00 | 11.25 |
| | AHX36 | 21.0 | – | 1225 | 35.2 | 25.0 | 13.50 | 11.50 |
| | AHX42 | 24.5 | – | 1190 | 35.4 | 25.2 | 14.00 | 11.80 |
| | AV*36 | 21.0 | – | 1190 | 35.0 | 25.2 | 14.00 | 12.00 |
| | F5FP048 | 24.5 | – | 1235 | 35.0 | 24.8 | 13.00 | 11.00 |
| | F6FP042 | 24.5 | – | 1290 | 35.8 | 25.8 | 13.50 | 11.50 |
| | MV12B | 17.5 | FC/MC43B | 1225 | 35.4 | 25.2 | 14.00 | 11.75 |
| | MV12D | 24.5 | FC/MC48D | 1135 | 35.0 | 25.4 | 14.00 | 12.00 |
| | MV16C | 21.0 | FC/MC43C | 1200 | 36.0 | 25.4 | 14.00 | 12.00 |
| | MV16C | 21.0 | FC/MC48C | 1200 | 36.0 | 25.4 | 14.00 | 12.00 |
| | MV20D | 24.5 | FC/MC48D | 1200 | 36.0 | 25.6 | 14.00 | 12.00 |
| | MX12B | 17.5 | FC/MC43B | 1220 | 35.4 | 25.2 | 13.75 | 11.75 |
| | MX12D | 24.5 | FC/MC48D | 1225 | 36.0 | 25.6 | 14.25 | 12.25 |
| | MX16C | 21.0 | FC/MC43C | 1140 | 35.4 | 25.0 | 14.50 | 12.25 |
| | MX16C | 21.0 | FC/MC48C | 1150 | 36.2 | 25.6 | 14.75 | 12.50 |
| TCGD42S41S4(H)(E) | AHE42D | 24.5 | – | 1385 | 42.0 | 30.6 | 14.25 | 12.00 |
| | AHE48D | 24.5 | – | 1385 | 42.0 | 30.4 | 14.00 | 12.00 |
| | AHE60D | 24.5 | – | 1390 | 42.0 | 31.0 | 14.50 | 12.00 |
| | AHP42 | 21.0 | – | 1485 | 42.0 | 30.6 | 13.00 | 11.00 |
| | AHP48 | 24.5 | – | 1400 | 42.0 | 30.2 | 13.25 | 11.25 |
| | AHP60 | 24.5 | – | 1400 | 42.0 | 30.0 | 14.00 | 11.75 |
| | AHR42C | 21.0 | – | 1485 | 42.0 | 30.8 | 13.00 | 11.00 |
| | AHR48D | 24.5 | – | 1320 | 41.0 | 28.8 | 13.00 | 11.00 |
| | AHR60D | 24.5 | – | 1350 | 42.0 | 30.2 | 13.00 | 11.00 |
| | AHX42 | 24.5 | – | 1395 | 42.0 | 30.4 | 14.25 | 12.00 |
| | AHX48 | 24.5 | – | 1445 | 42.0 | 30.8 | 14.25 | 12.00 |
| | AHX60 | 24.5 | – | 1440 | 42.0 | 31.2 | 14.25 | 12.00 |
| | AV*48 | 24.5 | – | 1385 | 42.0 | 30.4 | 14.25 | 12.00 |
| | AV*60 | 24.5 | – | 1360 | 42.0 | 30.4 | 14.25 | 12.00 |
| | F6FP042 | 24.5 | – | 1455 | 42.0 | 31.0 | 14.00 | 11.75 |
| | F6FP048 | 24.5 | – | 1380 | 42.0 | 30.2 | 14.00 | 11.75 |
| | F6FP060 | 24.5 | – | 1475 | 42.0 | 31.4 | 14.00 | 11.75 |
| | MV16C | 21.0 | FC/MC43C | 1380 | 42.0 | 30.2 | 14.00 | 12.00 |
| | MV16C | 21.0 | FC/MC48C | 1400 | 42.0 | 30.4 | 13.75 | 11.75 |
| | MV16C | 21.0 | FC60C | 1400 | 42.0 | 30.0 | 13.75 | 11.50 |
| | MV20D | 24.5 | FC/MC48D | 1470 | 42.0 | 31.0 | 14.25 | 12.00 |
| | MV20D | 24.5 | FC/MC60D | 1400 | 42.0 | 30.2 | 14.00 | 11.75 |
| | MV20D | 24.5 | FC/MC62D | 1400 | 42.0 | 30.8 | 14.00 | 12.00 |
| | MV20D | 24.5 | FC64D | 1400 | 42.0 | 30.8 | 14.50 | 12.25 |
| | MX16C | 21.0 | FC/MC43C | 1365 | 42.0 | 30.2 | 14.25 | 12.00 |
| | MX16C | 21.0 | FC/MC48C | 1390 | 42.0 | 30.2 | 14.25 | 12.00 |
| | MX16C | 21.0 | FC60C | 1420 | 42.0 | 30.0 | 14.00 | 12.00 |
| | MX20D | 24.5 | FC/MC48D | 1415 | 42.0 | 30.2 | 14.25 | 12.00 |
| | MX20D | 24.5 | FC/MC60D | 1470 | 42.0 | 30.8 | 14.25 | 12.00 |
| | MX20D | 24.5 | FC/MC62D | 1470 | 42.0 | 31.6 | 14.50 | 12.25 |
| | MX20D | 24.5 | FC64D | 1470 | 42.0 | 31.6 | 14.75 | 12.50 |

For Notes See Page 7.

## COOLING CAPACITY - With Air Handler Coils (Continued)

| UNIT MODEL | AIR HANDLER | | COIL MODEL[1] | COOLING | | | | |
|---|---|---|---|---|---|---|---|---|
| | MODEL | WIDTH | | RATED CFM | NET MBH | | SEER | EER |
| | | | | | TOTAL | SENS. | | |
| **13 SEER AC WITH AIR HANDLERS** | | | | | | | | |
| TCGD48S41S3(H)(E) | AHE48D | 24.5 | – | 1600 | 47.0 | 34.6 | 13.75 | 11.50 |
| | AHP48 | 24.5 | – | 1675 | 48.0 | 34.4 | 13.00 | 11.00 |
| | AHP60 | 24.5 | – | 1600 | 48.0 | 35.0 | 13.50 | 11.00 |
| | AHR48D | 24.5 | – | 1610 | 48.0 | 34.6 | 13.00 | 11.00 |
| | AHX48 | 24.5 | – | 1660 | 48.0 | 35.4 | 13.50 | 11.50 |
| | AV*48 | 24.5 | – | 1625 | 48.0 | 35.0 | 13.50 | 12.00 |
| | AV*60 | 24.5 | – | 1560 | 48.0 | 35.0 | 13.50 | 12.00 |
| | F4FV060 | 24.5 | – | 1600 | 48.0 | 34.6 | 14.00 | 11.50 |
| | F5FP048 | 24.5 | – | 1600 | 48.0 | 34.4 | 13.00 | 11.00 |
| | F5FP060 | 24.5 | – | 1600 | 48.0 | 34.4 | 13.00 | 11.00 |
| | F6FP048 | 24.5 | – | 1625 | 47.0 | 34.8 | 13.00 | 11.30 |
| | MV16C | 21.0 | FC/MC48C | 1600 | 48.0 | 35.0 | 13.50 | 12.00 |
| | MV16C | 21.0 | FC60C | 1625 | 47.5 | 34.6 | 13.50 | 11.50 |
| | MV20D | 24.5 | FC/MC48D | 1600 | 48.0 | 35.0 | 13.50 | 12.00 |
| | MV20D | 24.5 | FC/MC60D | 1600 | 48.0 | 35.0 | 13.50 | 12.00 |
| | MX16C | 21.0 | FC/MC48C | 1685 | 48.5 | 35.6 | 13.75 | 11.50 |
| | MX20D | 24.5 | FC/MC48D | 1525 | 48.0 | 34.2 | 14.00 | 11.75 |
| | MX20D | 24.5 | FC/MC60D | 1585 | 48.5 | 34.6 | 14.00 | 12.00 |
| TCGD60S41S3(E) | AHE60D | 24.5 | – | 1835 | 58.5 | 39.8 | 13.50 | 11.50 |
| | AHP60 | 24.5 | – | 1850 | 57.0 | 38.5 | 13.00 | 11.00 |
| | AHR60D | 24.5 | – | 1870 | 57.0 | 38.5 | 13.00 | 11.00 |
| | AHX60 | 24.5 | – | 1905 | 58.5 | 40.0 | 13.50 | 11.50 |
| | AV*60 | 24.5 | – | 1730 | 58.0 | 39.0 | 13.50 | 11.00 |
| | F4FV060 | 24.5 | – | 1780 | 57.0 | 38.5 | 13.50 | 11.00 |
| | F5FP060 | 24.5 | – | 1900 | 57.0 | 38.5 | 13.00 | 11.00 |
| | F6FP060 | 24.5 | – | 1710 | 57.5 | 39.0 | 13.50 | 11.50 |
| | MV20D | 24.5 | FC/MC60D | 1800 | 57.0 | 38.5 | 13.00 | 11.00 |
| | MV20D | 24.5 | FC/MC62D | 1800 | 57.0 | 38.5 | 13.00 | 11.00 |
| | MV20D | 24.5 | FC64D | 1855 | 57.0 | 39.0 | 13.75 | 11.50 |
| | MX20D | 24.5 | FC/MC60D | 1780 | 57.5 | 38.8 | 13.75 | 11.50 |
| | MX20D | 24.5 | FC/MC62D | 1795 | 58.0 | 38.8 | 14.00 | 11.75 |
| | MX20D | 24.5 | FC64D | 1795 | 58.5 | 39.8 | 14.50 | 12.00 |

Rated in accordance with DOE test procedures (Federal Register 12-27-79 and 3-18-88) and ANSI/AHRI Standard 210/240.
Cooling MBH based on 80°F entering air temperature, 50% RH (Relative Humidity), and rated air flow.
EER (Energy Efficiency Ratio) is the total cooling output in BTUs at 95°F outdoor ambient divided by the total electric power in watt-hours at those conditions.
SEER (Seasonal Energy Efficiency Ratio) is the total cooling output in BTUs during a normal annual usage period for cooling divided by the total electric power input in watt-hours during the same period.

1. MC coils available with a factory installed horizontal drain pan. See price pages for specific model number.

— = Not applicable.

MA Modular Air Handlers use Coil Only Ratings.

## COOLING CAPACITY - Upflow, Downflow & Horizontal Furnaces and Coils (Coil Only Ratings)

| UNIT MODEL | COIL | | CFM RANGE (MIN.-MAX.) | COOLING | | | | |
|---|---|---|---|---|---|---|---|---|
| | MODEL | WIDTH | | RATED CFM | NET MBH | | SEER [1] | EER |
| | | | | | TOTAL | SENS. | | |
| **13 SEER AC COIL ONLY RATINGS** | | | | | | | | |
| TCGD18S41S3(H)(E) | FC/MC/PC18 | 14.5,17.5 | 450-750 | 600 | 17.5 | 12.9 | 13.00 | 11.00 |
| | UC18 | 14.5,17.5 | 450-750 | 600 | 17.5 | 12.9 | 13.00 | 11.00 |
| TCGD24S41S3(H)(E) | FC/MC/PC32 | 14.5 | 600-1000 | 800 | 24.0 | 16.7 | 13.00 | 11.00 |
| | FC/MC/PC35 | 17.5,21.0 | 600-1000 | 800 | 24.0 | 16.7 | 13.00 | 11.00 |
| | FC/MC/PC36 | 14.5,17.5,21.0 | 600-1000 | 800 | 24.0 | 16.7 | 13.00 | 11.00 |
| | FC/MC/PC37 | 14.5 | 600-1000 | 800 | 24.0 | 16.7 | 13.00 | 11.00 |
| | FC/MC/PC43 | 17.5,21.0 | 600-1000 | 800 | 24.0 | 16.7 | 13.00 | 11.00 |
| | UC36 | 14.5,17.5,21.0 | 600-1000 | 800 | 24.0 | 16.7 | 13.00 | 11.00 |
| TCGD30S41S3(H)(E) | FC/MC/PC32 | 14.5 | 800-1200 | 1000 | 29.0 | 21.0 | 13.00 | 11.00 |
| | FC/MC/PC35 | 17.5,21.0 | 800-1200 | 1000 | 29.0 | 21.0 | 13.00 | 11.00 |
| | FC/MC/PC37 | 14.5 | 800-1200 | 1000 | 29.0 | 21.0 | 13.00 | 11.00 |
| | FC/MC/PC43 | 17.5,21.0 | 800-1200 | 1000 | 29.0 | 21.0 | 13.00 | 11.00 |
| TCGD36S41S3(H)(E) | FC/MC/PC37 | 14.5 | 1000-1400 | 1200 | 35.0 | 24.8 | 13.00 | 11.00 |
| | FC/MC/PC43 | 17.5,21.0 | 1000-1400 | 1200 | 35.0 | 24.8 | 13.00 | 11.00 |
| | FC/MC/PC48 | 21.0,24.5 | 1000-1400 | 1200 | 35.0 | 24.8 | 13.00 | 11.00 |
| | UC48 | 21.0,24.5 | 1000-1400 | 1200 | 35.0 | 24.8 | 13.00 | 11.00 |
| TCGD42S41S4(H)(E) | FC/MC/PC43 | 17.5,21.0 | 1200-1600 | 1400 | 41.5 | 29.8 | 13.00 | 11.00 |
| | FC/MC/PC48 | 21.0,24.5 | 1200-1600 | 1400 | 42.0 | 30.0 | 13.00 | 11.00 |
| | FC/MC/PC60 | 21.0,24.5 | 1200-1600 | 1400 | 41.5 | 29.6 | 13.00 | 11.00 |
| | FC/MC62 | 24.5 | 1200-1600 | 1400 | 42.0 | 30.4 | 13.00 | 11.00 |
| | FC64 | 24.5 | 1200-1600 | 1400 | 42.0 | 30.8 | 13.25 | 11.25 |
| | UC48 | 21.0,24.5 | 1200-1600 | 1400 | 42.0 | 30.0 | 13.00 | 11.00 |
| TCGD48S41S3(H)(E) | FC/MC/PC48 | 21.0,24.5 | 1400-1800 | 1600 | 48.0 | 34.4 | 13.00 | 11.00 |
| | FC/MC/PC60 | 21.0,24.5 | 1400-1800 | 1600 | 48.0 | 34.4 | 13.00 | 11.00 |
| | UC48 | 21.0,24.5 | 1400-1800 | 1600 | 48.0 | 34.4 | 13.00 | 11.00 |
| | UC60 | 21.0,24.5 | 1400-1800 | 1600 | 48.0 | 34.4 | 13.00 | 11.00 |
| TCGD60S41S3(E) | FC/MC/PC60 | 21.0,24.5 | 1600-2000 | 1800 | 57.0 | 38.5 | 13.00 | 11.00 |
| | FC/MC62 | 24.5 | 1600-2000 | 1800 | 57.0 | 38.5 | 13.00 | 11.00 |
| | FC64 | 24.5 | 1600-2000 | 1800 | 57.0 | 39.0 | 13.50 | 11.25 |
| | UC60 | 21.0,24.5 | 1600-2000 | 1800 | 57.0 | 38.5 | 13.00 | 11.00 |

1. Requires a S1-2FD06700224 Blower Time Delay unless a standard furnace is equipped with one.

MA Modular Air Handlers use Coil Only Ratings.

PSC furnaces, such as the TG8S, TGLS, and TG9S, use Coil Only Ratings.

## COOLING CAPACITY - With High Efficiency Motor Furnaces

| UNIT MODEL | FURNACE | | COIL MODEL[1] | COOLING | | | | |
|---|---|---|---|---|---|---|---|---|
| | MODEL | WIDTH | | RATED CFM | NET MBH | | SEER | EER |
| | | | | | TOTAL | SENS. | | |
| **13 SEER AC WITH HIGH EFFICIENCY MOTOR FURNACES[2]** | | | | | | | | |
| TCGD18S41S3(H)(E) | T*(8,L)V*A12 | 14.5 | FC/MC/PC18A | 620 | 17.5 | 12.7 | 14.50 | 12.50 |
| | T*(8,L)V*A12 | 14.5 | UC18A | 620 | 17.5 | 12.7 | 14.50 | 12.00 |
| | T*(8,L)V*B12 | 17.5 | FC/MC/PC18B | 580 | 17.5 | 12.6 | 14.50 | 12.00 |
| | T*(8,L)V*B12 | 17.5 | UC18B | 580 | 17.5 | 12.5 | 14.50 | 12.00 |
| | T*(8,L)X*A12 | 14.5 | FC/MC/PC18A | 540 | 17.7 | 12.9 | 14.50 | 12.50 |
| | T*(8,L)X*A12 | 14.5 | UC18A | 590 | 17.7 | 13.4 | 14.50 | 12.00 |
| | T*(8,L)X*B12 | 17.5 | FC/MC/PC18B | 580 | 18.0 | 13.4 | 14.50 | 12.50 |
| | T*(8,L)X*B12 | 17.5 | UC18B | 595 | 18.0 | 13.4 | 14.50 | 12.00 |
| | T*9V*A10 | 14.5 | FC/MC/PC18A | 580 | 18.0 | 13.3 | 14.00 | 12.50 |
| | T*9(C,V)*B12 | 17.5 | FC/MC/PC18B | 610 | 17.5 | 12.8 | 14.50 | 12.50 |
| | T*9(C,V)*B12 | 17.5 | UC18B | 610 | 17.5 | 12.6 | 14.50 | 12.50 |
| | T*9X*A10 | 14.5 | FC/MC/PC18A | 575 | 17.7 | 12.9 | 14.25 | 12.00 |
| | T*9X*B12 | 17.5 | FC/MC/PC18B | 590 | 18.0 | 13.4 | 14.50 | 12.50 |
| | T*9X*B12 | 17.5 | UC18B | 590 | 18.0 | 13.4 | 14.50 | 12.00 |
| | Y*(8,L)C*A12 | 14.5 | FC/MC/PC18A | 620 | 17.5 | 12.7 | 14.50 | 12.50 |
| | Y*(8,L)C*A12 | 14.5 | UC18A | 620 | 17.5 | 12.7 | 14.50 | 12.00 |
| | Y*(8,L)C*B12 | 17.5 | FC/MC/PC18B | 580 | 17.5 | 12.6 | 14.50 | 12.00 |
| | Y*(8,L)C*B12 | 17.5 | UC18B | 580 | 17.5 | 12.5 | 14.50 | 12.00 |
| | Y*9C*B12 | 17.5 | FC/MC/PC18B | 610 | 17.5 | 12.8 | 14.50 | 12.50 |
| | Y*9C*B12 | 17.5 | UC18B | 610 | 17.5 | 12.6 | 14.50 | 12.50 |
| TCGD24S41S3(H)(E) | T*(8,L)V*A12 | 14.5 | FC/MC/PC32A | 775 | 24.0 | 17.0 | 14.00 | 11.50 |
| | T*(8,L)V*A12 | 14.5 | FC/MC/PC36A | 805 | 24.0 | 16.9 | 14.00 | 12.00 |
| | T*(8,L)V*A12 | 14.5 | FC/MC/PC37A | 805 | 24.0 | 17.0 | 14.00 | 12.00 |
| | T*(8,L)V*A12 | 14.5 | UC36A | 805 | 23.6 | 16.6 | 13.80 | 11.50 |
| | T*(8,L)V*B12 | 17.5 | FC/MC/PC35B | 760 | 24.0 | 16.8 | 14.00 | 12.00 |
| | T*(8,L)V*B12 | 17.5 | FC/MC/PC36B | 765 | 24.0 | 17.0 | 14.00 | 12.00 |
| | T*(8,L)V*B12 | 17.5 | FC/MC/PC43B | 760 | 24.0 | 16.9 | 14.00 | 12.00 |
| | T*(8,L)V*B12 | 17.5 | UC36B | 765 | 23.6 | 16.7 | 14.00 | 11.50 |
| | T*(8,L)X*A12 | 14.5 | FC/MC/PC32A | 800 | 24.0 | 16.9 | 14.00 | 11.50 |
| | T*(8,L)X*A12 | 14.5 | FC/MC/PC36A | 815 | 24.0 | 16.8 | 14.00 | 12.00 |
| | T*(8,L)X*A12 | 14.5 | FC/MC/PC37A | 840 | 24.0 | 17.0 | 14.00 | 12.00 |
| | T*(8,L)X*B12 | 17.5 | FC/MC/PC35B | 850 | 24.0 | 17.0 | 14.00 | 12.00 |
| | T*(8,L)X*B12 | 17.5 | FC/MC/PC36B | 835 | 24.0 | 16.8 | 14.00 | 12.00 |
| | T*(8,L)X*B12 | 17.5 | FC/MC/PC43B | 865 | 24.0 | 17.0 | 14.00 | 12.00 |
| | T*9V*A10 | 14.5 | FC/MC/PC32A | 785 | 24.2 | 16.9 | 13.75 | 11.50 |
| | T*9V*A10 | 14.5 | FC/MC/PC36A | 790 | 24.0 | 16.8 | 13.50 | 11.50 |
| | T*9V*A10 | 14.5 | FC/MC/PC37A | 790 | 24.6 | 17.2 | 13.75 | 11.75 |
| | T*9(C,V)*B12 | 17.5 | FC/MC/PC35B | 815 | 24.0 | 17.1 | 14.00 | 12.00 |
| | T*9(C,V)*B12 | 17.5 | FC/MC/PC36B | 815 | 24.0 | 16.9 | 14.00 | 12.00 |
| | T*9(C,V)*B12 | 17.5 | FC/MC/PC43B | 800 | 24.0 | 17.0 | 14.00 | 12.00 |
| | T*9(C,V)*B12 | 17.5 | UC36B | 815 | 23.6 | 16.7 | 13.80 | 11.50 |
| | T*9X*A10 | 14.5 | FC/MC/PC32A | 745 | 24.0 | 16.8 | 13.75 | 11.75 |
| | T*9X*A10 | 14.5 | FC/MC/PC36A | 760 | 24.2 | 16.9 | 13.75 | 11.75 |
| | T*9X*A10 | 14.5 | FC/MC/PC37A | 740 | 24.4 | 17.1 | 14.00 | 11.75 |
| | T*9X*B12 | 17.5 | FC/MC/PC36B | 775 | 24.0 | 16.8 | 14.00 | 12.00 |
| | T*9X*C16 | 21.0 | FC/MC/PC35C | 715 | 23.8 | 16.3 | 14.00 | 12.00 |
| | T*9X*C16 | 21.0 | FC/MC/PC36C | 770 | 24.0 | 16.8 | 14.00 | 12.00 |
| | T*9X*C20 | 21.0 | FC/MC/PC35C | 825 | 24.0 | 17.0 | 14.00 | 12.00 |
| | T*9X*C20 | 21.0 | FC/MC/PC36C | 810 | 24.0 | 16.8 | 14.00 | 12.00 |
| | Y*(8,L)C*A12 | 14.5 | FC/MC/PC32A | 775 | 24.0 | 17.0 | 14.00 | 11.50 |
| | Y*(8,L)C*A12 | 14.5 | FC/MC/PC36A | 805 | 24.0 | 16.9 | 14.00 | 12.00 |
| | Y*(8,L)C*A12 | 14.5 | FC/MC/PC37A | 805 | 24.0 | 17.0 | 14.00 | 12.00 |

For notes see Page 15.

## COOLING CAPACITY - With High Efficiency Motor Furnaces (Continued)

| UNIT MODEL | FURNACE | | COIL MODEL[1] | COOLING | | | | |
|---|---|---|---|---|---|---|---|---|
| | MODEL | WIDTH | | RATED CFM | NET MBH | | SEER | EER |
| | | | | | TOTAL | SENS. | | |
| **13 SEER AC WITH HIGH EFFICIENCY MOTOR FURNACES[2]** | | | | | | | | |
| TCGD24S41S3(H)(E) | Y*(8,L)C*A12 | 14.5 | UC36A | 805 | 23.6 | 16.6 | 13.80 | 11.50 |
| | Y*(8,L)C*B12 | 17.5 | FC/MC/PC35B | 760 | 24.0 | 16.8 | 14.00 | 12.00 |
| | Y*(8,L)C*B12 | 17.5 | FC/MC/PC36B | 765 | 24.0 | 17.0 | 14.00 | 12.00 |
| | Y*(8,L)C*B12 | 17.5 | FC/MC/PC43B | 760 | 24.0 | 16.9 | 14.00 | 12.00 |
| | Y*(8,L)C*B12 | 17.5 | UC36B | 765 | 23.6 | 16.7 | 14.00 | 11.50 |
| | Y*9C*B12 | 17.5 | FC/MC/PC35B | 815 | 24.0 | 17.1 | 14.00 | 12.00 |
| | Y*9C*B12 | 17.5 | FC/MC/PC36B | 815 | 24.0 | 16.9 | 14.00 | 12.00 |
| | Y*9C*B12 | 17.5 | FC/MC/PC43B | 800 | 24.0 | 17.0 | 14.00 | 12.00 |
| | Y*9C*B12 | 17.5 | UC36B | 815 | 23.6 | 16.7 | 13.80 | 11.50 |
| TCGD30S41S3(H)(E) | T*(8,L)V*A12 | 14.5 | FC/MC/PC32A | 1045 | 29.2 | 21.8 | 13.20 | 11.00 |
| | T*(8,L)V*A12 | 14.5 | FC/MC/PC37A | 980 | 29.8 | 21.8 | 13.80 | 11.50 |
| | T*(8,L)V*B12 | 17.5 | FC/MC/PC35B | 995 | 29.6 | 21.4 | 14.00 | 11.50 |
| | T*(8,L)V*B12 | 17.5 | FC/MC/PC43B | 990 | 30.0 | 22.0 | 14.00 | 12.00 |
| | T*(8,L)V*C16 | 21.0 | FC/MC/PC35C | 1025 | 29.6 | 22.0 | 14.00 | 12.00 |
| | T*(8,L)V*C16 | 21.0 | FC/MC/PC43C | 990 | 30.0 | 22.1 | 14.00 | 12.00 |
| | T*(8,L)V*C20 | 21.0 | FC/MC/PC35C | 1080 | 30.0 | 22.4 | 14.00 | 12.00 |
| | T*(8,L)V*C20 | 21.0 | FC/MC/PC43C | 1000 | 30.0 | 22.1 | 14.00 | 12.00 |
| | T*(8,L)X*A12 | 14.5 | FC/MC/PC32A | 970 | 29.2 | 21.4 | 13.20 | 11.00 |
| | T*(8,L)X*A12 | 14.5 | FC/MC/PC37A | 1105 | 30.0 | 22.9 | 13.80 | 11.50 |
| | T*(8,L)X*B12 | 17.5 | FC/MC/PC35B | 1120 | 30.0 | 22.8 | 14.00 | 11.50 |
| | T*(8,L)X*B12 | 17.5 | FC/MC/PC43B | 1125 | 30.0 | 22.9 | 14.00 | 12.00 |
| | T*(8,L)X*C16 | 21.0 | FC/MC/PC35C | 1105 | 30.0 | 22.8 | 14.00 | 12.00 |
| | T*(8,L)X*C16 | 21.0 | FC/MC/PC43C | 710 | 28.2 | 19.3 | 14.00 | 12.00 |
| | T*(8,L)X*C20 | 21.0 | FC/MC/PC35C | 850 | 28.8 | 20.6 | 14.00 | 12.00 |
| | T*(8,L)X*C20 | 21.0 | FC/MC/PC43C | 870 | 29.6 | 21.2 | 14.00 | 12.00 |
| | T*9(C,V)*B12 | 17.5 | FC/MC/PC35B | 1045 | 29.4 | 22.0 | 13.50 | 11.50 |
| | T*9(C,V)*B12 | 17.5 | FC/MC/PC43B | 1035 | 30.0 | 22.0 | 13.80 | 11.50 |
| | T*9(C,V)*C16 | 21.0 | FC/MC/PC35C | 1005 | 29.6 | 22.0 | 14.00 | 12.00 |
| | T*9(C,V)*C16 | 21.0 | FC/MC/PC43C | 1030 | 30.0 | 22.0 | 14.00 | 12.00 |
| | T*9(C,V)*C20 | 21.0 | FC/MC/PC35C | 985 | 29.6 | 22.0 | 14.00 | 12.00 |
| | T*9(C,V)*C20 | 21.0 | FC/MC/PC43C | 995 | 30.0 | 22.1 | 14.00 | 12.00 |
| | T*9X*B12 | 17.5 | FC/MC/PC35B | 1085 | 29.8 | 22.8 | 14.00 | 12.00 |
| | T*9X*B12 | 17.5 | FC/MC/PC43B | 1095 | 30.0 | 22.9 | 13.80 | 11.50 |
| | T*9X*C16 | 21.0 | FC/MC/PC35C | 1075 | 29.8 | 22.4 | 14.00 | 12.00 |
| | T*9X*C16 | 21.0 | FC/MC/PC43C | 1055 | 30.0 | 22.9 | 14.00 | 12.00 |
| | T*9X*C20 | 21.0 | FC/MC/PC43C | 720 | 28.2 | 19.3 | 14.00 | 12.00 |
| | Y*(8,L)C*A12 | 14.5 | FC/MC/PC32A | 1045 | 29.2 | 21.8 | 13.20 | 11.00 |
| | Y*(8,L)C*A12 | 14.5 | FC/MC/PC37A | 980 | 29.8 | 21.8 | 13.80 | 11.50 |
| | Y*(8,L)C*B12 | 17.5 | FC/MC/PC35B | 995 | 29.6 | 21.4 | 14.00 | 11.50 |
| | Y*(8,L)C*B12 | 17.5 | FC/MC/PC43B | 990 | 30.0 | 22.0 | 14.00 | 12.00 |
| | Y*(8,L)C*C16 | 21.0 | FC/MC/PC35C | 1025 | 29.6 | 22.0 | 14.00 | 12.00 |
| | Y*(8,L)C*C16 | 21.0 | FC/MC/PC43C | 990 | 30.0 | 22.1 | 14.00 | 12.00 |
| | Y*(8,L)C*C20 | 21.0 | FC/MC/PC35C | 1080 | 30.0 | 22.4 | 14.00 | 12.00 |
| | Y*(8,L)C*C20 | 21.0 | FC/MC/PC43C | 1000 | 30.0 | 22.1 | 14.00 | 12.00 |
| | Y*9C*B12 | 17.5 | FC/MC/PC35B | 1045 | 29.4 | 22.0 | 13.50 | 11.50 |
| | Y*9C*B12 | 17.5 | FC/MC/PC43B | 1035 | 30.0 | 22.0 | 13.80 | 11.50 |
| | Y*9C*C16 | 21.0 | FC/MC/PC35C | 1005 | 29.6 | 22.0 | 14.00 | 12.00 |
| | Y*9C*C16 | 21.0 | FC/MC/PC43C | 1030 | 30.0 | 22.0 | 14.00 | 12.00 |
| | Y*9C*C20 | 21.0 | FC/MC/PC35C | 985 | 29.6 | 22.0 | 14.00 | 12.00 |
| | Y*9C*C20 | 21.0 | FC/MC/PC43C | 995 | 30.0 | 22.1 | 14.00 | 12.00 |

For notes see Page 15.

## COOLING CAPACITY - With High Efficiency Motor Furnaces (Continued)

| UNIT MODEL | FURNACE | | COIL MODEL[1] | COOLING | | | | |
|---|---|---|---|---|---|---|---|---|
| | MODEL | WIDTH | | RATED CFM | NET MBH | | SEER | EER |
| | | | | | TOTAL | SENS. | | |
| **13 SEER AC WITH HIGH EFFICIENCY MOTOR FURNACES[2]** | | | | | | | | |
| TCGD36S41S3(H)(E) | T*(8,L)V*A12 | 14.5 | FC/MC/PC37A | 980 | 33.8 | 23.0 | 13.50 | 11.00 |
| | T*(8,L)V*B12 | 17.5 | FC/MC/PC43B | 1210 | 35.2 | 25.2 | 13.50 | 11.00 |
| | T*(8,L)V*C16 | 21.0 | FC/MC/PC43C | 1205 | 35.6 | 25.4 | 14.00 | 11.50 |
| | T*(8,L)V*C16 | 21.0 | FC/MC/PC48C | 1210 | 36.0 | 26.0 | 14.00 | 12.00 |
| | T*(8,L)V*C16 | 21.0 | UC48C | 1210 | 34.6 | 24.8 | 13.50 | 11.50 |
| | T*(8,L)V*C20 | 21.0 | FC/MC/PC43C | 1190 | 35.6 | 25.4 | 14.00 | 12.00 |
| | T*(8,L)V*C20 | 21.0 | FC/MC/PC48C | 1155 | 36.0 | 26.1 | 14.00 | 12.00 |
| | T*(8,L)V*C20 | 21.0 | UC48C | 1155 | 34.8 | 24.8 | 14.00 | 11.50 |
| | T*(8,L)X*A12 | 14.5 | FC/MC/PC37A | 1290 | 35.2 | 25.4 | 13.30 | 11.25 |
| | T*(8,L)X*B12 | 17.5 | FC/MC/PC43B | 1300 | 35.2 | 25.4 | 13.30 | 11.25 |
| | T*(8,L)X*C16 | 21.0 | FC/MC/PC43C | 1175 | 35.2 | 24.8 | 14.00 | 11.50 |
| | T*(8,L)X*C16 | 21.0 | FC/MC/PC48C | 1185 | 35.6 | 25.2 | 14.00 | 11.50 |
| | T*(8,L)X*C16 | 21.0 | UC48C | 1185 | 34.2 | 24.8 | 13.50 | 11.50 |
| | T*(8,L)X*C20 | 21.0 | FC/MC/PC43C | 1250 | 35.6 | 25.6 | 13.80 | 11.70 |
| | T*(8,L)X*C20 | 21.0 | FC/MC/PC48C | 1270 | 35.8 | 25.8 | 14.00 | 11.50 |
| | T*(8,L)X*C20 | 21.0 | UC48C | 1300 | 34.8 | 25.4 | 13.50 | 11.50 |
| | T*9(C,V)*B12 | 17.5 | FC/MC/PC43B | 1200 | 35.2 | 25.2 | 13.50 | 11.00 |
| | T*9(C,V)*C16 | 21.0 | FC/MC/PC43C | 1240 | 35.4 | 25.2 | 13.50 | 11.50 |
| | T*9(C,V)*C16 | 21.0 | FC/MC/PC48C | 1195 | 36.0 | 26.0 | 14.00 | 11.50 |
| | T*9(C,V)*C16 | 21.0 | UC48C | 1195 | 34.6 | 24.8 | 13.50 | 11.50 |
| | T*9(C,V)*C20 | 21.0 | FC/MC/PC43C | 1200 | 35.6 | 25.4 | 14.00 | 11.50 |
| | T*9(C,V)*C20 | 21.0 | FC/MC/PC48C | 1330 | 36.0 | 26.5 | 14.00 | 11.50 |
| | T*9(C,V)*C20 | 21.0 | UC48C | 1305 | 35.0 | 25.6 | 13.30 | 11.00 |
| | T*9(C,V)*D20 | 24.5 | FC/MC/PC48D | 1240 | 36.0 | 26.2 | 14.00 | 12.00 |
| | T*9(C,V)*D20 | 24.5 | UC48D | 1240 | 34.8 | 25.0 | 13.80 | 11.50 |
| | T*9X*B12 | 17.5 | FC/MC/PC43B | 1270 | 35.2 | 25.4 | 13.25 | 11.25 |
| | T*9X*C16 | 21.0 | FC/MC/PC43C | 1260 | 35.4 | 25.4 | 13.45 | 11.40 |
| | T*9X*C16 | 21.0 | FC/MC/PC48C | 1280 | 35.8 | 25.8 | 13.70 | 11.50 |
| | T*9X*C16 | 21.0 | UC48C | 1280 | 34.6 | 24.8 | 13.15 | 11.20 |
| | T*9X*C20 | 21.0 | FC/MC/PC43C | 1185 | 35.0 | 24.6 | 13.55 | 11.40 |
| | T*9X*C20 | 21.0 | FC/MC/PC48C | 1205 | 35.4 | 25.0 | 13.70 | 11.50 |
| | T*9X*C20 | 21.0 | UC48C | 1205 | 34.0 | 24.6 | 13.25 | 11.20 |
| | T*9X*D20 | 24.5 | FC/MC/PC48D | 1240 | 35.4 | 25.0 | 13.70 | 11.50 |
| | T*9X*D20 | 24.5 | UC48D | 1240 | 34.0 | 24.6 | 13.30 | 11.25 |
| | Y*(8,L)C*A12 | 14.5 | FC/MC/PC37A | 980 | 33.8 | 23.0 | 13.50 | 11.00 |
| | Y*(8,L)C*B12 | 17.5 | FC/MC/PC43B | 1210 | 35.2 | 25.2 | 13.50 | 11.00 |
| | Y*(8,L)C*C16 | 21.0 | FC/MC/PC43C | 1205 | 35.6 | 25.4 | 14.00 | 11.50 |
| | Y*(8,L)C*C16 | 21.0 | FC/MC/PC48C | 1210 | 36.0 | 26.0 | 14.00 | 12.00 |
| | Y*(8,L)C*C16 | 21.0 | UC48C | 1210 | 34.6 | 24.8 | 13.50 | 11.50 |
| | Y*(8,L)C*C20 | 21.0 | FC/MC/PC43C | 1190 | 35.6 | 25.4 | 14.00 | 12.00 |
| | Y*(8,L)C*C20 | 21.0 | FC/MC/PC48C | 1155 | 36.0 | 26.1 | 14.00 | 12.00 |
| | Y*(8,L)C*C20 | 21.0 | UC48C | 1155 | 34.8 | 24.8 | 14.00 | 11.50 |
| | Y*9C*B12 | 17.5 | FC/MC/PC43B | 1200 | 35.2 | 25.2 | 13.50 | 11.00 |
| | Y*9C*C16 | 21.0 | FC/MC/PC43C | 1240 | 35.4 | 25.2 | 13.50 | 11.50 |
| | Y*9C*C16 | 21.0 | FC/MC/PC48C | 1195 | 36.0 | 26.0 | 14.00 | 11.50 |
| | Y*9C*C16 | 21.0 | UC48C | 1195 | 34.6 | 24.8 | 13.50 | 11.50 |
| | Y*9C*C20 | 21.0 | FC/MC/PC43C | 1200 | 35.6 | 25.4 | 14.00 | 11.50 |
| | Y*9C*C20 | 21.0 | FC/MC/PC48C | 1330 | 36.0 | 26.5 | 14.00 | 11.50 |
| | Y*9C*C20 | 21.0 | UC48C | 1305 | 35.0 | 25.6 | 13.30 | 11.00 |
| | Y*9C*D20 | 24.5 | FC/MC/PC48D | 1240 | 36.0 | 26.2 | 14.00 | 12.00 |
| | Y*9C*D20 | 24.5 | UC48D | 1240 | 34.8 | 25.0 | 13.80 | 11.50 |

For notes see Page 15.

## COOLING CAPACITY - With High Efficiency Motor Furnaces (Continued)

| UNIT MODEL | FURNACE | | COIL MODEL[1] | COOLING | | | | |
|---|---|---|---|---|---|---|---|---|
| | MODEL | WIDTH | | RATED CFM | NET MBH | | SEER | EER |
| | | | | | TOTAL | SENS. | | |
| **13 SEER AC WITH HIGH EFFICIENCY MOTOR FURNACES[2]** | | | | | | | | |
| TCGD42S41S4(H)(E) | T*(8,L)V*B12 | 17.5 | FC/MC/PC43B | 1270 | 41.0 | 28.8 | 13.25 | 11.25 |
| | T*(8,L)V*C16 | 21.0 | FC/MC/PC43C | 1390 | 42.0 | 30.2 | 13.50 | 11.50 |
| | T*(8,L)V*C16 | 21.0 | FC/MC/PC48C | 1330 | 42.0 | 29.8 | 13.50 | 11.50 |
| | T*(8,L)V*C16 | 21.0 | FC/MC/PC48D | 1330 | 42.0 | 29.8 | 13.50 | 11.50 |
| | T*(8,L)V*C16 | 21.0 | FC/MC/PC60D | 1420 | 42.0 | 30.0 | 13.50 | 11.50 |
| | T*(8,L)V*C16 | 21.0 | FC/MC62D | 1420 | 42.0 | 30.6 | 13.50 | 11.50 |
| | T*(8,L)V*C16 | 21.0 | FC/PC60C | 1420 | 42.0 | 30.0 | 13.50 | 11.50 |
| | T*(8,L)V*C16 | 21.0 | FC64D | 1420 | 42.0 | 30.8 | 14.25 | 12.00 |
| | T*(8,L)V*C16 | 21.0 | UC48C | 1435 | 42.0 | 30.2 | 13.50 | 11.50 |
| | T*(8,L)V*C16 | 21.0 | UC60C | 1420 | 42.0 | 30.0 | 13.50 | 11.50 |
| | T*(8,L)V*C20 | 21.0 | FC/MC/PC43C | 1450 | 42.0 | 30.6 | 13.25 | 11.25 |
| | T*(8,L)V*C20 | 21.0 | FC/MC/PC48C | 1410 | 42.0 | 30.2 | 13.75 | 11.50 |
| | T*(8,L)V*C20 | 21.0 | FC/MC/PC48D | 1410 | 42.0 | 30.2 | 13.75 | 11.50 |
| | T*(8,L)V*C20 | 21.0 | FC/MC/PC60D | 1340 | 42.0 | 30.2 | 13.75 | 11.75 |
| | T*(8,L)V*C20 | 21.0 | FC/MC62D | 1365 | 42.0 | 30.8 | 14.00 | 11.75 |
| | T*(8,L)V*C20 | 21.0 | FC/PC60C | 1340 | 42.0 | 30.2 | 13.75 | 11.75 |
| | T*(8,L)V*C20 | 21.0 | FC64D | 1410 | 42.0 | 30.8 | 14.25 | 12.00 |
| | T*(8,L)V*C20 | 21.0 | UC48C | 1410 | 42.0 | 30.2 | 13.75 | 11.75 |
| | T*(8,L)V*C20 | 21.0 | UC60C | 1410 | 42.0 | 30.0 | 13.50 | 11.50 |
| | T*(8,L)X*B12 | 17.5 | FC/MC/PC43B | 1300 | 41.5 | 29.4 | 13.75 | 11.50 |
| | T*(8,L)X*C16 | 21.0 | FC/MC/PC43C | 1475 | 42.0 | 31.0 | 14.00 | 11.75 |
| | T*(8,L)X*C16 | 21.0 | FC/MC/PC48C | 1360 | 42.0 | 30.2 | 14.25 | 12.00 |
| | T*(8,L)X*C16 | 21.0 | FC/MC/PC48D | 1360 | 42.0 | 30.2 | 14.25 | 12.00 |
| | T*(8,L)X*C16 | 21.0 | FC/MC/PC60D | 1360 | 42.0 | 30.0 | 14.00 | 12.00 |
| | T*(8,L)X*C16 | 21.0 | FC/MC62D | 1360 | 42.0 | 30.8 | 14.25 | 12.00 |
| | T*(8,L)X*C16 | 21.0 | FC/PC60C | 1360 | 42.0 | 30.0 | 14.00 | 12.00 |
| | T*(8,L)X*C16 | 21.0 | FC64D | 1360 | 42.0 | 31.0 | 14.50 | 12.25 |
| | T*(8,L)X*C16 | 21.0 | UC48C | 1400 | 42.0 | 30.2 | 14.00 | 12.00 |
| | T*(8,L)X*C16 | 21.0 | UC60C | 1400 | 42.0 | 30.2 | 13.75 | 12.00 |
| | T*(8,L)X*C20 | 21.0 | FC/MC/PC43C | 1415 | 42.0 | 30.4 | 14.00 | 11.75 |
| | T*(8,L)X*C20 | 21.0 | FC/MC/PC48C | 1475 | 42.0 | 31.0 | 14.25 | 12.00 |
| | T*(8,L)X*C20 | 21.0 | FC/MC/PC48D | 1475 | 42.0 | 31.0 | 14.25 | 12.00 |
| | T*(8,L)X*C20 | 21.0 | FC/MC/PC60D | 1485 | 42.0 | 31.0 | 14.00 | 12.00 |
| | T*(8,L)X*C20 | 21.0 | FC/MC62D | 1485 | 42.0 | 31.6 | 14.25 | 12.00 |
| | T*(8,L)X*C20 | 21.0 | FC/PC60C | 1485 | 42.0 | 31.0 | 14.00 | 12.00 |
| | T*(8,L)X*C20 | 21.0 | FC64D | 1485 | 42.0 | 31.8 | 14.50 | 12.25 |
| | T*(8,L)X*C20 | 21.0 | UC48C | 1475 | 42.0 | 31.0 | 14.00 | 12.00 |
| | T*(8,L)X*C20 | 21.0 | UC60C | 1485 | 42.0 | 31.0 | 13.75 | 11.75 |
| | T*9(C,V)*C16 | 21.0 | FC/MC/PC43C | 1360 | 42.0 | 30.0 | 13.25 | 11.25 |
| | T*9(C,V)*C16 | 21.0 | FC/MC/PC48C | 1395 | 42.0 | 30.4 | 13.50 | 11.50 |
| | T*9(C,V)*C16 | 21.0 | FC/MC/PC48D | 1395 | 42.0 | 30.4 | 13.50 | 11.50 |
| | T*9(C,V)*C16 | 21.0 | FC/MC/PC60D | 1445 | 41.5 | 29.8 | 13.00 | 11.00 |
| | T*9(C,V)*C16 | 21.0 | FC/MC62D | 1445 | 42.0 | 30.6 | 13.25 | 11.00 |
| | T*9(C,V)*C16 | 21.0 | FC/PC60C | 1445 | 41.5 | 29.8 | 13.00 | 11.00 |
| | T*9(C,V)*C16 | 21.0 | FC64D | 1445 | 42.0 | 30.8 | 13.50 | 11.50 |
| | T*9(C,V)*C16 | 21.0 | UC48C | 1395 | 42.0 | 30.2 | 13.50 | 11.50 |
| | T*9(C,V)*C16 | 21.0 | UC60C | 1445 | 41.5 | 29.6 | 13.00 | 11.00 |
| | T*9(C,V)*C20 | 21.0 | FC/MC/PC43C | 1395 | 42.0 | 30.0 | 13.25 | 11.25 |
| | T*9(C,V)*C20 | 21.0 | FC/MC/PC48C | 1430 | 42.0 | 30.4 | 13.25 | 11.25 |
| | T*9(C,V)*C20 | 21.0 | FC/MC/PC48D | 1430 | 42.0 | 30.4 | 13.25 | 11.25 |
| | T*9(C,V)*C20 | 21.0 | FC/MC/PC60D | 1445 | 42.0 | 29.8 | 13.25 | 11.25 |
| | T*9(C,V)*C20 | 21.0 | FC/MC62D | 1445 | 42.0 | 30.6 | 13.50 | 11.25 |
| | T*9(C,V)*C20 | 21.0 | FC/PC60C | 1445 | 42.0 | 29.8 | 13.25 | 11.25 |

For notes see Page 15.

## COOLING CAPACITY - With High Efficiency Motor Furnaces (Continued)

| UNIT MODEL | FURNACE | | COIL MODEL[1] | COOLING | | | | |
|---|---|---|---|---|---|---|---|---|
| | MODEL | WIDTH | | RATED CFM | NET MBH | | SEER | EER |
| | | | | | TOTAL | SENS. | | |
| **13 SEER AC WITH HIGH EFFICIENCY MOTOR FURNACES[2]** | | | | | | | | |
| TCGD42S41S4(H)(E) | T*9(C,V)*C20 | 21.0 | FC64D | 1445 | 42.0 | 30.8 | 13.75 | 11.75 |
| | T*9(C,V)*C20 | 21.0 | UC48C | 1430 | 42.0 | 30.2 | 13.25 | 11.25 |
| | T*9(C,V)*C20 | 21.0 | UC60C | 1445 | 41.5 | 29.8 | 13.00 | 11.25 |
| | T*9(C,V)*D20 | 24.5 | FC/MC/PC48D | 1450 | 42.0 | 30.2 | 13.50 | 11.50 |
| | T*9(C,V)*D20 | 24.5 | FC/MC/PC60D | 1445 | 42.0 | 30.0 | 13.50 | 11.50 |
| | T*9(C,V)*D20 | 24.5 | FC/MC62D | 1455 | 42.0 | 30.6 | 13.50 | 11.50 |
| | T*9(C,V)*D20 | 24.5 | FC64D | 1455 | 42.0 | 30.6 | 14.00 | 11.75 |
| | T*9(C,V)*D20 | 24.5 | UC48D | 1450 | 42.0 | 30.2 | 13.50 | 11.50 |
| | T*9(C,V)*D20 | 24.5 | UC60D | 1445 | 41.5 | 29.8 | 13.25 | 11.25 |
| | T*9X*B12 | 17.5 | FC/MC/PC43B | 1270 | 41.5 | 29.0 | 13.50 | 11.50 |
| | T*9X*C16 | 21.0 | FC/MC/PC43C | 1410 | 42.0 | 30.2 | 13.75 | 11.50 |
| | T*9X*C16 | 21.0 | FC/MC/PC48C | 1425 | 42.0 | 30.4 | 13.75 | 11.75 |
| | T*9X*C16 | 21.0 | FC/MC/PC48D | 1425 | 42.0 | 30.4 | 13.75 | 11.75 |
| | T*9X*C16 | 21.0 | FC/MC/PC60D | 1460 | 42.0 | 30.0 | 13.75 | 11.50 |
| | T*9X*C16 | 21.0 | FC/MC62D | 1460 | 42.0 | 30.6 | 13.75 | 11.75 |
| | T*9X*C16 | 21.0 | FC/PC60C | 1460 | 42.0 | 30.0 | 13.75 | 11.50 |
| | T*9X*C16 | 21.0 | FC64D | 1460 | 42.0 | 30.8 | 14.25 | 12.00 |
| | T*9X*C16 | 21.0 | UC48C | 1425 | 42.0 | 30.4 | 13.75 | 11.75 |
| | T*9X*C16 | 21.0 | UC60C | 1460 | 42.0 | 30.0 | 13.50 | 11.50 |
| | T*9X*C20 | 21.0 | FC/MC/PC43C | 1400 | 42.0 | 30.4 | 14.00 | 11.75 |
| | T*9X*C20 | 21.0 | FC/MC/PC48C | 1420 | 42.0 | 30.4 | 14.00 | 11.75 |
| | T*9X*C20 | 21.0 | FC/MC/PC48D | 1420 | 42.0 | 30.4 | 14.00 | 11.75 |
| | T*9X*C20 | 21.0 | FC/MC/PC60D | 1460 | 42.0 | 30.2 | 13.75 | 11.75 |
| | T*9X*C20 | 21.0 | FC/MC62D | 1460 | 42.0 | 30.8 | 14.00 | 11.75 |
| | T*9X*C20 | 21.0 | FC/PC60C | 1460 | 42.0 | 30.2 | 13.75 | 11.75 |
| | T*9X*C20 | 21.0 | FC64D | 1460 | 42.0 | 30.8 | 14.50 | 12.25 |
| | T*9X*C20 | 21.0 | UC48C | 1420 | 42.0 | 30.4 | 14.00 | 11.75 |
| | T*9X*C20 | 21.0 | UC60C | 1460 | 42.0 | 30.0 | 13.75 | 11.75 |
| | T*9X*D20 | 24.5 | FC/MC/PC48D | 1435 | 42.0 | 30.4 | 14.00 | 12.00 |
| | T*9X*D20 | 24.5 | FC/MC/PC60D | 1515 | 42.0 | 31.0 | 14.00 | 12.00 |
| | T*9X*D20 | 24.5 | FC/MC62D | 1425 | 42.0 | 30.8 | 14.00 | 12.00 |
| | T*9X*D20 | 24.5 | FC64D | 1425 | 42.0 | 30.8 | 14.50 | 12.25 |
| | T*9X*D20 | 24.5 | UC48D | 1435 | 42.0 | 30.0 | 14.00 | 12.00 |
| | T*9X*D20 | 24.5 | UC60D | 1515 | 42.0 | 31.4 | 13.75 | 12.00 |
| | Y*(8,L)C*B12 | 17.5 | FC/MC/PC43B | 1270 | 41.0 | 28.8 | 13.25 | 11.25 |
| | Y*(8,L)C*C16 | 21.0 | FC/MC/PC43C | 1390 | 42.0 | 30.2 | 13.50 | 11.50 |
| | Y*(8,L)C*C16 | 21.0 | FC/MC/PC48C | 1330 | 42.0 | 29.8 | 13.50 | 11.50 |
| | Y*(8,L)C*C16 | 21.0 | FC/MC/PC48D | 1330 | 42.0 | 29.8 | 13.50 | 11.50 |
| | Y*(8,L)C*C16 | 21.0 | FC/MC/PC60D | 1420 | 42.0 | 30.0 | 13.50 | 11.50 |
| | Y*(8,L)C*C16 | 21.0 | FC/MC62D | 1420 | 42.0 | 30.6 | 13.50 | 11.50 |
| | Y*(8,L)C*C16 | 21.0 | FC/PC60C | 1420 | 42.0 | 30.0 | 13.50 | 11.50 |
| | Y*(8,L)C*C16 | 21.0 | FC64D | 1420 | 42.0 | 30.8 | 14.25 | 12.00 |
| | Y*(8,L)C*C16 | 21.0 | UC48C | 1435 | 42.0 | 30.2 | 13.50 | 11.50 |
| | Y*(8,L)C*C16 | 21.0 | UC60C | 1420 | 42.0 | 30.0 | 13.50 | 11.50 |
| | Y*(8,L)C*C20 | 21.0 | FC/MC/PC43C | 1450 | 42.0 | 30.6 | 13.25 | 11.25 |
| | Y*(8,L)C*C20 | 21.0 | FC/MC/PC48C | 1410 | 42.0 | 30.2 | 13.75 | 11.50 |
| | Y*(8,L)C*C20 | 21.0 | FC/MC/PC48D | 1410 | 42.0 | 30.2 | 13.75 | 11.50 |
| | Y*(8,L)C*C20 | 21.0 | FC/MC/PC60D | 1340 | 42.0 | 30.2 | 13.75 | 11.75 |
| | Y*(8,L)C*C20 | 21.0 | FC/MC62D | 1365 | 42.0 | 30.8 | 14.00 | 11.75 |
| | Y*(8,L)C*C20 | 21.0 | FC/PC60C | 1340 | 42.0 | 30.2 | 13.75 | 11.75 |
| | Y*(8,L)C*C20 | 21.0 | FC64D | 1410 | 42.0 | 30.8 | 14.25 | 12.00 |
| | Y*(8,L)C*C20 | 21.0 | UC48C | 1410 | 42.0 | 30.2 | 13.75 | 11.75 |

For notes see Page 15.

## COOLING CAPACITY - With High Efficiency Motor Furnaces (Continued)

| UNIT MODEL | FURNACE | | COIL MODEL[1] | COOLING | | | | |
|---|---|---|---|---|---|---|---|---|
| | MODEL | WIDTH | | RATED CFM | NET MBH | | SEER | EER |
| | | | | | TOTAL | SENS. | | |
| **13 SEER AC WITH HIGH EFFICIENCY MOTOR FURNACES[2]** | | | | | | | | |
| TCGD42S41S4(H)(E) | Y*(8,L)C*C20 | 21.0 | UC60C | 1410 | 42.0 | 30.0 | 13.50 | 11.50 |
| | Y*9C*C16 | 21.0 | FC/MC/PC43C | 1360 | 42.0 | 30.0 | 13.25 | 11.25 |
| | Y*9C*C16 | 21.0 | FC/MC/PC48C | 1395 | 42.0 | 30.4 | 13.50 | 11.50 |
| | Y*9C*C16 | 21.0 | FC/MC/PC48D | 1395 | 42.0 | 30.4 | 13.50 | 11.50 |
| | Y*9C*C16 | 21.0 | FC/MC/PC60D | 1445 | 41.5 | 29.8 | 13.00 | 11.00 |
| | Y*9C*C16 | 21.0 | FC/MC62D | 1445 | 42.0 | 30.6 | 13.25 | 11.00 |
| | Y*9C*C16 | 21.0 | FC/PC60C | 1445 | 41.5 | 29.8 | 13.00 | 11.00 |
| | Y*9C*C16 | 21.0 | FC64D | 1445 | 42.0 | 30.8 | 13.50 | 11.50 |
| | Y*9C*C16 | 21.0 | UC48C | 1395 | 42.0 | 30.2 | 13.50 | 11.50 |
| | Y*9C*C16 | 21.0 | UC60C | 1445 | 41.5 | 29.6 | 13.00 | 11.00 |
| | Y*9C*C20 | 21.0 | FC/MC/PC43C | 1395 | 42.0 | 30.0 | 13.25 | 11.25 |
| | Y*9C*C20 | 21.0 | FC/MC/PC48C | 1430 | 42.0 | 30.4 | 13.25 | 11.25 |
| | Y*9C*C20 | 21.0 | FC/MC/PC48D | 1430 | 42.0 | 30.4 | 13.25 | 11.25 |
| | Y*9C*C20 | 21.0 | FC/MC/PC60D | 1445 | 42.0 | 29.8 | 13.25 | 11.25 |
| | Y*9C*C20 | 21.0 | FC/MC62D | 1445 | 42.0 | 30.6 | 13.50 | 11.25 |
| | Y*9C*C20 | 21.0 | FC/PC60C | 1445 | 42.0 | 29.8 | 13.25 | 11.25 |
| | Y*9C*C20 | 21.0 | FC64D | 1445 | 42.0 | 30.8 | 13.75 | 11.75 |
| | Y*9C*C20 | 21.0 | UC48C | 1430 | 42.0 | 30.2 | 13.25 | 11.25 |
| | Y*9C*C20 | 21.0 | UC60C | 1445 | 41.5 | 29.8 | 13.00 | 11.25 |
| | Y*9C*D20 | 24.5 | FC/MC/PC48D | 1450 | 42.0 | 30.2 | 13.50 | 11.50 |
| | Y*9C*D20 | 24.5 | FC/MC/PC60D | 1445 | 42.0 | 30.0 | 13.50 | 11.50 |
| | Y*9C*D20 | 24.5 | FC/MC62D | 1455 | 42.0 | 30.6 | 13.50 | 11.50 |
| | Y*9C*D20 | 24.5 | FC64D | 1455 | 42.0 | 30.6 | 14.00 | 11.75 |
| | Y*9C*D20 | 24.5 | UC48D | 1450 | 42.0 | 30.2 | 13.50 | 11.50 |
| | Y*9C*D20 | 24.5 | UC60D | 1445 | 41.5 | 29.8 | 13.25 | 11.25 |
| TCGD48S41S3(H)(E) | T*(8,L)V*C16 | 21.0 | FC/MC/PC48C | 1565 | 48.0 | 35.0 | 13.30 | 11.00 |
| | T*(8,L)V*C16 | 21.0 | FC/PC60C | 1600 | 48.0 | 35.0 | 13.30 | 11.00 |
| | T*(8,L)V*C20 | 21.0 | FC/MC/PC48C | 1640 | 48.0 | 35.0 | 13.20 | 11.00 |
| | T*(8,L)V*C20 | 21.0 | FC/PC60C | 1625 | 48.0 | 35.0 | 13.50 | 11.50 |
| | T*(8,L)X*C16 | 21.0 | FC/MC/PC48C | 1600 | 48.0 | 34.4 | 13.30 | 11.00 |
| | T*(8,L)X*C16 | 21.0 | FC/PC60C | 1605 | 48.0 | 34.6 | 13.30 | 11.00 |
| | T*(8,L)X*C20 | 21.0 | FC/MC/PC48C | 1660 | 48.0 | 34.4 | 13.20 | 11.00 |
| | T*(8,L)X*C20 | 21.0 | FC/MC/PC60D | 1595 | 48.0 | 34.8 | 13.30 | 11.00 |
| | T*9(C,V)*C16 | 21.0 | FC/MC/PC48C | 1590 | 48.0 | 34.6 | 13.10 | 11.00 |
| | T*9(C,V)*C16 | 21.0 | FC/PC60C | 1590 | 48.0 | 35.2 | 13.10 | 11.00 |
| | T*9(C,V)*C20 | 21.0 | FC/MC/PC48C | 1655 | 48.0 | 34.8 | 13.20 | 11.00 |
| | T*9(C,V)*C20 | 21.0 | FC/PC60C | 1655 | 48.0 | 35.2 | 13.10 | 11.00 |
| | T*9(C,V)*D20 | 24.5 | FC/MC/PC48D | 1645 | 48.0 | 35.2 | 13.20 | 11.00 |
| | T*9(C,V)*D20 | 24.5 | FC/MC/PC60D | 1615 | 48.0 | 35.0 | 13.20 | 11.00 |
| | T*9X*C16 | 21.0 | FC/MC/PC48C | 1565 | 48.0 | 34.8 | 13.10 | 11.00 |
| | T*9X*C16 | 21.0 | FC/PC60C | 1575 | 47.0 | 34.6 | 13.10 | 11.00 |
| | T*9X*C16 | 21.0 | UC60C | 1575 | 47.0 | 34.6 | 13.10 | 11.00 |
| | T*9X*C20 | 21.0 | FC/MC/PC48C | 1615 | 48.0 | 34.4 | 13.20 | 11.00 |
| | T*9X*C20 | 21.0 | FC/PC60C | 1625 | 47.0 | 34.6 | 13.10 | 11.00 |
| | T*9X*C20 | 21.0 | UC60C | 1625 | 47.0 | 34.6 | 13.10 | 11.00 |
| | T*9X*D20 | 24.5 | FC/MC/PC48D | 1635 | 48.0 | 34.8 | 13.20 | 11.00 |
| | T*9X*D20 | 24.5 | FC/MC/PC60D | 1490 | 47.5 | 33.8 | 13.20 | 11.00 |
| | Y*(8,L)C*C16 | 21.0 | FC/MC/PC48C | 1565 | 48.0 | 35.0 | 13.30 | 11.00 |
| | Y*(8,L)C*C16 | 21.0 | FC/PC60C | 1600 | 48.0 | 35.0 | 13.30 | 11.00 |
| | Y*(8,L)C*C20 | 21.0 | FC/MC/PC48C | 1640 | 48.0 | 35.0 | 13.20 | 11.00 |
| | Y*(8,L)C*C20 | 21.0 | FC/PC60C | 1625 | 48.0 | 35.0 | 13.50 | 11.50 |
| | Y*9C*C16 | 21.0 | FC/MC/PC48C | 1590 | 48.0 | 34.6 | 13.10 | 11.00 |
| | Y*9C*C16 | 21.0 | FC/PC60C | 1590 | 48.0 | 35.2 | 13.10 | 11.00 |

For notes see Page 15.

## COOLING CAPACITY - With High Efficiency Motor Furnaces (Continued)

| UNIT MODEL | FURNACE | | COIL MODEL[1] | COOLING | | | | |
|---|---|---|---|---|---|---|---|---|
| | MODEL | WIDTH | | RATED CFM | NET MBH | | SEER | EER |
| | | | | | TOTAL | SENS. | | |
| **13 SEER AC WITH HIGH EFFICIENCY MOTOR FURNACES[2]** | | | | | | | | |
| TCGD48S41S3(H)(E) | Y*9C*C20 | 21.0 | FC/MC/PC48C | 1655 | 48.0 | 34.8 | 13.20 | 11.00 |
| | Y*9C*C20 | 21.0 | FC/PC60C | 1655 | 48.0 | 35.2 | 13.10 | 11.00 |
| | Y*9C*D20 | 24.5 | FC/MC/PC48D | 1645 | 48.0 | 35.2 | 13.20 | 11.00 |
| | Y*9C*D20 | 24.5 | FC/MC/PC60D | 1615 | 48.0 | 35.0 | 13.20 | 11.00 |
| TCGD60S41S3(E) | T*(8,L)V*C20 | 21.0 | FC/MC62D | 1615 | 56.5 | 37.4 | 13.50 | 11.00 |
| | T*(8,L)V*C20 | 21.0 | FC/PC60C | 1605 | 55.5 | 37.0 | 13.50 | 11.00 |
| | T*(8,L)V*C20 | 21.0 | FC64D | 1615 | 57.0 | 37.8 | 14.00 | 11.75 |
| | T*(8,L)V*C20 | 21.0 | UC60C | 1605 | 54.0 | 35.2 | 13.00 | 11.00 |
| | T*(8,L)X*C16 | 21.0 | FC/PC60C | 1605 | 56.5 | 37.8 | 13.50 | 11.00 |
| | T*(8,L)X*C16 | 21.0 | UC60C | 1640 | 56.0 | 37.2 | 13.00 | 11.00 |
| | T*(8,L)X*C20 | 21.0 | FC/MC/PC60D | 1690 | 57.0 | 37.8 | 13.50 | 11.00 |
| | T*(8,L)X*C20 | 21.0 | FC/MC62D | 1665 | 57.0 | 37.8 | 13.50 | 11.00 |
| | T*(8,L)X*C20 | 21.0 | FC64D | 1665 | 57.0 | 37.8 | 14.25 | 12.00 |
| | T*(8,L)X*C20 | 21.0 | UC60C | 1735 | 56.5 | 38.5 | 13.00 | 11.00 |
| | T*(8,L)X*C20 | 21.0 | UC60D | 1735 | 56.5 | 38.5 | 13.00 | 11.00 |
| | T*9(C,V)*C20 | 21.0 | FC/MC62D | 1655 | 56.0 | 37.2 | 13.20 | 11.00 |
| | T*9(C,V)*C20 | 21.0 | FC/PC60C | 1655 | 55.0 | 36.8 | 13.30 | 11.00 |
| | T*9(C,V)*C20 | 21.0 | UC60C | 1655 | 53.5 | 35.0 | 13.00 | 10.80 |
| | T*9(C,V)*D20 | 24.5 | FC/MC/PC60D | 1615 | 55.5 | 36.8 | 13.30 | 11.00 |
| | T*9(C,V)*D20 | 24.5 | FC/MC62D | 1630 | 56.0 | 37.4 | 13.30 | 11.00 |
| | T*9(C,V)*D20 | 24.5 | UC60D | 1615 | 53.5 | 35.0 | 13.00 | 10.90 |
| | T*9X*C20 | 21.0 | FC/MC/PC60D | 1645 | 56.5 | 37.8 | 13.30 | 11.00 |
| | T*9X*C20 | 21.0 | FC/PC60C | 1560 | 56.0 | 37.2 | 13.00 | 11.00 |
| | T*9X*C20 | 21.0 | FC64D | 1595 | 57.0 | 37.8 | 14.25 | 12.00 |
| | T*9X*C20 | 21.0 | UC60C | 1645 | 56.0 | 37.2 | 13.00 | 11.00 |
| | T*9X*C20 | 21.0 | UC60D | 1645 | 56.0 | 37.2 | 13.00 | 11.00 |
| | T*9X*D20 | 24.5 | FC/MC/PC60D | 1630 | 56.5 | 37.8 | 13.30 | 11.00 |
| | T*9X*D20 | 24.5 | FC64D | 1645 | 57.0 | 37.8 | 14.25 | 12.00 |
| | T*9X*D20 | 24.5 | UC60D | 1630 | 56.0 | 37.2 | 13.00 | 11.00 |
| | Y*(8,L)C*C20 | 21.0 | FC/MC62D | 1615 | 56.5 | 37.4 | 13.50 | 11.00 |
| | Y*(8,L)C*C20 | 21.0 | FC/PC60C | 1605 | 55.5 | 37.0 | 13.50 | 11.00 |
| | Y*(8,L)C*C20 | 21.0 | FC64D | 1615 | 57.0 | 37.8 | 14.00 | 11.75 |
| | Y*(8,L)C*C20 | 21.0 | UC60C | 1605 | 54.0 | 35.2 | 13.00 | 11.00 |
| | Y*9C*C20 | 21.0 | FC/MC62D | 1655 | 56.0 | 37.2 | 13.20 | 11.00 |
| | Y*9C*C20 | 21.0 | FC/PC60C | 1655 | 55.0 | 36.8 | 13.30 | 11.00 |
| | Y*9C*C20 | 21.0 | FC64D | 1655 | 57.0 | 37.8 | 13.50 | 11.25 |
| | Y*9C*C20 | 21.0 | UC60C | 1655 | 53.5 | 35.0 | 13.00 | 10.80 |
| | Y*9C*D20 | 24.5 | FC/MC/PC60D | 1615 | 55.5 | 36.8 | 13.30 | 11.00 |
| | Y*9C*D20 | 24.5 | FC/MC62D | 1630 | 56.0 | 37.4 | 13.30 | 11.00 |
| | Y*9C*D20 | 24.5 | FC64D | 1630 | 57.0 | 37.8 | 13.50 | 11.25 |
| | Y*9C*D20 | 24.5 | UC60D | 1615 | 53.5 | 35.0 | 13.00 | 10.90 |

1. MC coils available with a factory installed horizontal drain pan. See price pages for specific model number.
2. High Efficiency Motor Furnaces have B.O.D (Blower on Delay) standard.

PSC furnaces, such as the TG8S, TGLS, and TG9S, use Coil Only Ratings.

## ACCESSORIES

Refer to Price Manual for specific model numbers.

**Off Cycle Timer Delay** - Provides a 5-minute off cycle to prevent rapid recycling of the compressor.

**Start Assist Kit (S1-2SA067*) -** Provides increased starting torque for areas with low voltage. See Hard Start Kit Accessory Installation Manual for Hard Start Kit part number for each model.

**TXV Kits -** S1-1TVM series thermal expansion valves precisely meter refrigerant for optimum performance over a wide range of conditions. See System Charge table for TXV part number for each model.

**Thermostats** - Compatible thermostat controls are available through accessory sourcing. For optimum performance and installation, refer to the UPGNET “Low Voltage Wiring Diagram” document to select and apply controls.

## SOUND POWER RATINGS

| UNIT MODEL | (dBA) |
|---|---|
| 18 | 72 |
| 24 | 73 |
| 30 | 72 |
| 36 | 71 |
| 42 | 78 |
| 48 | 77 |
| 60 | 75 |

Rated in accordance with ARI Standard 270-1995.

## TYPICAL INSTALLATION

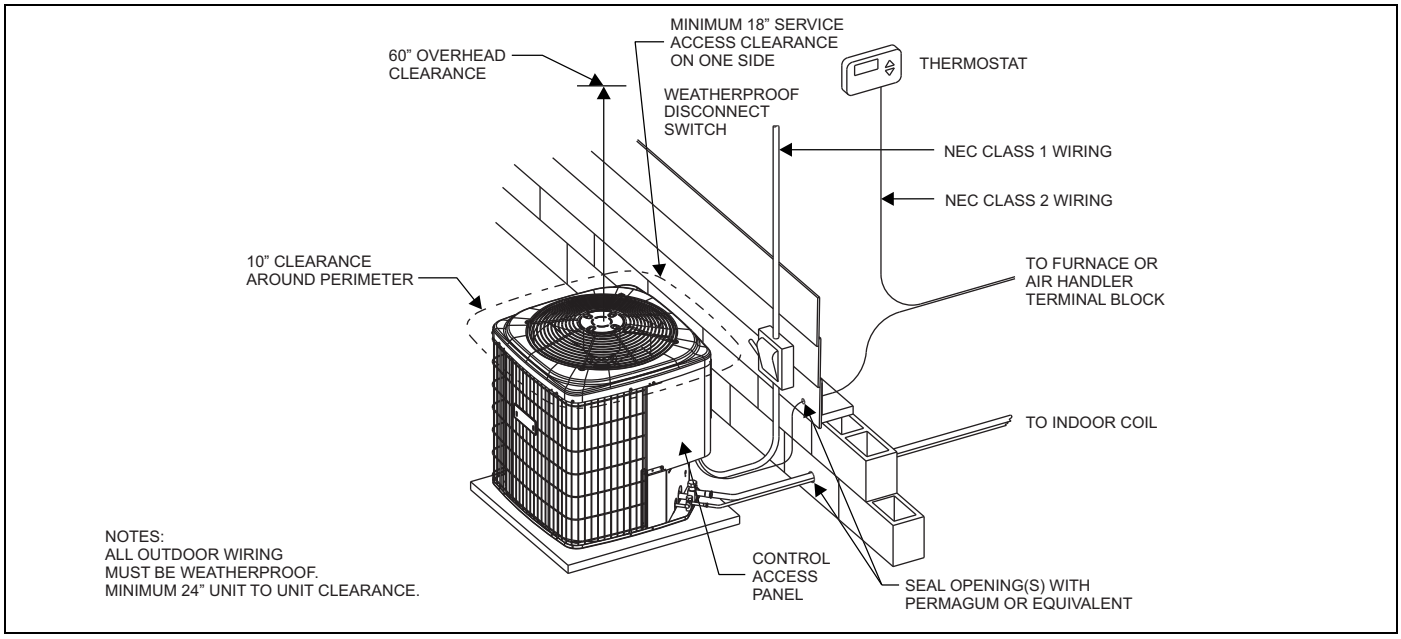


## TYPICAL FIELD WIRING

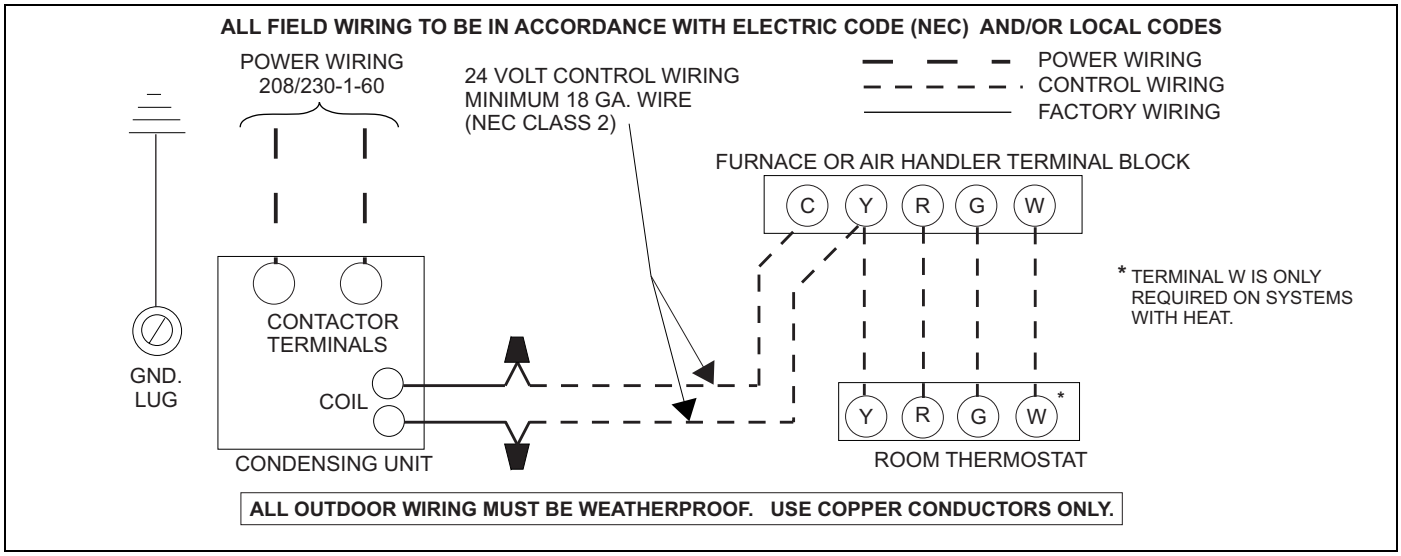

## COOLING PERFORMANCE DATA

| AIR CONDITIONER MODEL NO. | | TCGD18S41S3(H)(E) | | | | | | | | | | | | | | |
|---|---|---|---|---|---|---|---|---|---|---|---|---|---|---|---|---|
| INDOOR COIL MODEL NO. | | FC/MC/PC18 | | | | | | | | | | | | | | |
| CONDENSING ENTERING AIR TEMPERATURE | IDCFM | 450 | | | | | 600 | | | | | 750 | | | | |
| | ID DB (°F) | 80 | 80 | 75 | 80 | 80 | 80 | 80 | 75 | 80 | 80 | 80 | 80 | 75 | 80 | 80 |
| | ID WB (°F) | 57 | 62 | 62 | 67 | 72 | 57 | 62 | 62 | 67 | 72 | 57 | 62 | 62 | 67 | 72 |
| 65 | T.C. | 16.3 | 18.4 | 18.3 | 20.1 | 20.7 | 17.5 | 19.0 | 18.7 | 20.2 | 20.9 | 18.7 | 19.6 | 19.1 | 20.3 | 21.1 |
| | S.C. | 16.3 | 14.5 | 12.7 | 12.6 | 9.7 | 17.5 | 17.1 | 14.2 | 13.6 | 10.3 | 18.7 | 17.2 | 15.7 | 14.6 | 10.9 |
| | KW | 1.16 | 1.16 | 1.16 | 1.15 | 1.14 | 1.21 | 1.21 | 1.21 | 1.20 | 1.20 | 1.26 | 1.26 | 1.27 | 1.26 | 1.25 |
| 75 | T.C. | 15.6 | 17.4 | 17.3 | 19.0 | 19.9 | 16.8 | 18.1 | 17.7 | 19.3 | 20.1 | 18.1 | 18.8 | 18.2 | 19.5 | 20.3 |
| | S.C. | 15.6 | 14.3 | 12.2 | 12.2 | 9.3 | 16.8 | 16.3 | 13.8 | 13.4 | 10.1 | 18.1 | 18.4 | 15.4 | 14.6 | 10.8 |
| | KW | 1.28 | 1.28 | 1.28 | 1.28 | 1.27 | 1.34 | 1.34 | 1.34 | 1.33 | 1.33 | 1.39 | 1.39 | 1.39 | 1.39 | 1.39 |
| 85 | T.C. | 14.8 | 16.4 | 16.2 | 18.0 | 19.2 | 16.1 | 17.2 | 16.7 | 18.4 | 19.3 | 17.4 | 18.0 | 17.3 | 18.8 | 19.5 |
| | S.C. | 14.8 | 14.0 | 11.8 | 11.7 | 9.0 | 16.1 | 15.6 | 13.5 | 13.2 | 9.8 | 17.4 | 17.2 | 15.1 | 14.6 | 10.6 |
| | KW | 1.40 | 1.41 | 1.40 | 1.41 | 1.41 | 1.46 | 1.46 | 1.46 | 1.46 | 1.47 | 1.52 | 1.52 | 1.52 | 1.52 | 1.52 |
| 95 | T.C. | 14.0 | 15.4 | 15.1 | 17.0 | 18.4 | 15.4 | 16.3 | 15.8 | 17.5 | 18.6 | 16.7 | 17.2 | 16.4 | 18.0 | 18.7 |
| | S.C. | 14.0 | 13.8 | 11.3 | 11.3 | 8.6 | 15.4 | 14.8 | 13.1 | 13.0 | 9.6 | 16.7 | 15.9 | 14.9 | 14.6 | 10.5 |
| | KW | 1.53 | 1.53 | 1.53 | 1.53 | 1.54 | 1.59 | 1.59 | 1.59 | 1.59 | 1.60 | 1.65 | 1.65 | 1.65 | 1.65 | 1.66 |
| 105 | T.C. | 13.0 | 14.2 | 13.7 | 15.6 | 17.1 | 14.3 | 15.1 | 14.3 | 16.1 | 17.3 | 15.5 | 16.1 | 15.0 | 16.6 | 17.4 |
| | S.C. | 13.0 | 13.1 | 10.7 | 10.8 | 8.3 | 14.3 | 14.0 | 12.4 | 12.5 | 9.3 | 15.5 | 14.9 | 14.0 | 14.3 | 10.3 |
| | KW | 1.69 | 1.69 | 1.69 | 1.70 | 1.71 | 1.75 | 1.75 | 1.75 | 1.76 | 1.77 | 1.82 | 1.82 | 1.81 | 1.82 | 1.83 |
| 115 | T.C. | 12.1 | 13.0 | 12.3 | 14.3 | 15.9 | 13.2 | 14.0 | 13.0 | 14.7 | 16.0 | 14.3 | 15.0 | 13.6 | 15.2 | 16.2 |
| | S.C. | 12.1 | 12.4 | 10.1 | 10.3 | 8.0 | 13.2 | 13.1 | 11.7 | 12.1 | 9.0 | 14.3 | 13.8 | 13.2 | 13.9 | 10.1 |
| | KW | 1.85 | 1.85 | 1.84 | 1.85 | 1.87 | 1.91 | 1.91 | 1.91 | 1.92 | 1.94 | 1.98 | 1.98 | 1.97 | 1.98 | 2.00 |
| 125 | T.C. | 11.1 | 11.9 | 10.9 | 12.9 | 14.7 | 12.1 | 12.9 | 11.6 | 13.4 | 14.8 | 13.1 | 13.9 | 12.3 | 13.8 | 14.9 |
| | S.C. | 11.1 | 11.8 | 9.5 | 9.8 | 7.6 | 12.1 | 12.3 | 10.9 | 11.7 | 8.7 | 13.1 | 12.8 | 12.3 | 13.5 | 9.8 |
| | KW | 2.00 | 2.00 | 1.99 | 2.01 | 2.04 | 2.08 | 2.07 | 2.06 | 2.08 | 2.10 | 2.15 | 2.14 | 2.13 | 2.15 | 2.16 |

**NOTE:** ALL CAPACITIES INCLUDE INDOOR FAN HEAT. KW VALUES ARE FOR THE SYSTEM (OUTDOOR + INDOOR).

### Multipliers for determining the performance with other indoor sections.

**NOTE:** For dry bulb temperatures different than those listed (between 73-87 °F), sensible capacity increases by 1060 BTUH per 1000 CFM per degree above the listed temperature and decreases by 1060 BTUH per 1000 CFM per degree below the listed temperature.

| Air Handlers | Coils | T.C. | S.C. | KW |
|---|---|---|---|---|
| – | FC/MC/PC18 | 1.00 | 1.00 | 1.00 |
| – | UC18 | 1.00 | 1.00 | 1.00 |
| AHE18B | – | 1.02 | 1.07 | 0.92 |
| AHP18 | – | 1.00 | 1.00 | 1.00 |
| AHR18B | – | 1.02 | 1.07 | 1.02 |
| AHX18 | – | 1.03 | 1.07 | 0.94 |
| AV*24 | – | 1.03 | 1.05 | 0.94 |
| F4FP024 | – | 1.00 | 1.00 | 1.00 |
| F6FP018 | – | 1.02 | 1.03 | 0.93 |
| MV12B | FC/MC18B | 1.00 | 1.03 | 0.88 |
| MX12B | FC/MC18B | 1.02 | 1.05 | 0.90 |

| Furnaces | Coils | T.C. | S.C. | KW |
|---|---|---|---|---|
| T*(8,L)V*A12 | FC/MC/PC18A | 1.00 | 0.98 | 0.88 |
| T*(8,L)V*A12 | UC18A | 1.00 | 0.98 | 0.92 |
| T*(8,L)V*B12 | FC/MC/PC18B | 1.00 | 0.98 | 0.92 |
| T*(8,L)V*B12 | UC18B | 1.00 | 0.97 | 0.92 |
| T*(8,L)X*A12 | FC/MC/PC18A | 1.01 | 1.00 | 0.89 |
| T*(8,L)X*A12 | UC18A | 1.01 | 1.04 | 0.93 |
| T*(8,L)X*B12 | FC/MC/PC18B | 1.03 | 1.04 | 0.91 |
| T*(8,L)X*B12 | UC18B | 1.03 | 1.04 | 0.94 |
| T*9V*A10 | FC/MC/PC18A | 1.03 | 1.03 | 0.91 |
| T*9(C,V)*B12 | FC/MC/PC18B | 1.00 | 0.99 | 0.88 |
| T*9(C,V)*B12 | UC18B | 1.00 | 0.98 | 0.88 |
| T*9X*A10 | FC/MC/PC18A | 1.01 | 1.00 | 0.93 |
| T*9X*B12 | FC/MC/PC18B | 1.03 | 1.04 | 0.91 |
| T*9X*B12 | UC18B | 1.03 | 1.04 | 0.94 |
| Y*(8,L)C*A12 | FC/MC/PC18A | 1.00 | 0.98 | 0.88 |
| Y*(8,L)C*A12 | UC18A | 1.00 | 0.98 | 0.92 |
| Y*(8,L)C*B12 | FC/MC/PC18B | 1.00 | 0.98 | 0.92 |
| Y*(8,L)C*B12 | UC18B | 1.00 | 0.97 | 0.92 |
| Y*9C*B12 | FC/MC/PC18B | 1.00 | 0.99 | 0.88 |
| Y*9C*B12 | UC18B | 1.00 | 0.98 | 0.88 |

## COOLING PERFORMANCE DATA

| AIR CONDITIONER MODEL NO. | | TCGD24S41S3(H)(E) | | | | | | | | | | | | | | |
|---|---|---|---|---|---|---|---|---|---|---|---|---|---|---|---|---|
| INDOOR COIL MODEL NO. | | FC/MC/PC36 | | | | | | | | | | | | | | |
| CONDENSING ENTERING AIR TEMPERATURE | IDCFM | 600 | | | | | 800 | | | | | 1000 | | | | |
| | ID DB (°F) | 80 | 80 | 75 | 80 | 80 | 80 | 80 | 75 | 80 | 80 | 80 | 80 | 75 | 80 | 80 |
| | ID WB (°F) | 57 | 62 | 62 | 67 | 72 | 57 | 62 | 62 | 67 | 72 | 57 | 62 | 62 | 67 | 72 |
| 65 | T.C. | 20.5 | 25.5 | 25.4 | 27.0 | 28.2 | 22.6 | 26.7 | 26.5 | 28.3 | 29.5 | 24.7 | 28.0 | 27.7 | 29.6 | 30.8 |
| | S.C. | 20.5 | 19.1 | 16.6 | 16.3 | 13.3 | 22.6 | 22.0 | 18.8 | 18.0 | 14.2 | 24.7 | 24.9 | 21.0 | 19.7 | 15.1 |
| | KW | 1.66 | 1.67 | 1.67 | 1.67 | 1.67 | 1.73 | 1.74 | 1.74 | 1.74 | 1.74 | 1.81 | 1.81 | 1.82 | 1.82 | 1.82 |
| 75 | T.C. | 19.1 | 23.5 | 23.4 | 25.5 | 27.2 | 21.4 | 25.0 | 24.7 | 26.9 | 28.6 | 23.7 | 26.4 | 26.0 | 28.2 | 29.9 |
| | S.C. | 19.1 | 18.5 | 15.7 | 15.8 | 12.8 | 21.4 | 21.1 | 18.0 | 17.6 | 13.8 | 23.7 | 23.8 | 20.4 | 19.4 | 14.9 |
| | KW | 1.79 | 1.80 | 1.80 | 1.81 | 1.82 | 1.87 | 1.87 | 1.88 | 1.89 | 1.90 | 1.95 | 1.95 | 1.95 | 1.97 | 1.98 |
| 85 | T.C. | 17.7 | 21.6 | 21.3 | 24.0 | 26.3 | 20.2 | 23.2 | 22.8 | 25.4 | 27.6 | 22.7 | 24.8 | 24.3 | 26.9 | 28.9 |
| | S.C. | 17.7 | 17.9 | 14.9 | 15.3 | 12.3 | 20.2 | 20.3 | 17.3 | 17.2 | 13.5 | 22.7 | 22.7 | 19.7 | 19.1 | 14.6 |
| | KW | 1.92 | 1.92 | 1.92 | 1.95 | 1.98 | 2.01 | 2.01 | 2.01 | 2.04 | 2.06 | 2.09 | 2.10 | 2.09 | 2.12 | 2.14 |
| 95 | T.C. | 16.3 | 19.6 | 19.3 | 22.5 | 25.3 | 19.0 | 21.5 | 21.0 | 24.0 | 26.7 | 21.7 | 23.3 | 22.6 | 25.5 | 28.0 |
| | S.C. | 16.3 | 17.3 | 14.1 | 14.7 | 11.9 | 19.0 | 19.5 | 16.5 | 16.8 | 13.1 | 21.6 | 21.6 | 19.0 | 18.9 | 14.4 |
| | KW | 2.05 | 2.05 | 2.05 | 2.09 | 2.14 | 2.14 | 2.15 | 2.14 | 2.18 | 2.22 | 2.24 | 2.24 | 2.23 | 2.27 | 2.30 |
| 105 | T.C. | 15.0 | 17.7 | 17.1 | 20.1 | 23.1 | 17.4 | 19.5 | 18.8 | 21.6 | 24.4 | 19.8 | 21.3 | 20.4 | 23.1 | 25.8 |
| | S.C. | 15.0 | 15.9 | 13.1 | 13.8 | 11.1 | 17.4 | 17.8 | 15.3 | 15.9 | 12.5 | 19.8 | 19.8 | 17.4 | 18.0 | 13.9 |
| | KW | 2.17 | 2.17 | 2.16 | 2.22 | 2.28 | 2.28 | 2.28 | 2.26 | 2.31 | 2.37 | 2.38 | 2.39 | 2.36 | 2.41 | 2.45 |
| 115 | T.C. | 13.8 | 15.8 | 15.0 | 17.9 | 20.9 | 15.9 | 17.6 | 16.6 | 19.3 | 22.2 | 18.0 | 19.4 | 18.3 | 20.7 | 23.6 |
| | S.C. | 13.8 | 14.6 | 12.1 | 12.9 | 10.4 | 15.9 | 16.3 | 14.0 | 15.0 | 11.8 | 17.9 | 17.9 | 15.8 | 17.1 | 13.3 |
| | KW | 2.29 | 2.29 | 2.27 | 2.34 | 2.41 | 2.41 | 2.41 | 2.38 | 2.44 | 2.51 | 2.53 | 2.53 | 2.49 | 2.54 | 2.60 |
| 125 | T.C. | 12.5 | 13.9 | 12.8 | 15.7 | 18.7 | 14.4 | 15.7 | 14.5 | 17.0 | 20.1 | 16.2 | 17.5 | 16.2 | 18.4 | 21.4 |
| | S.C. | 12.5 | 13.4 | 11.2 | 12.0 | 9.6 | 14.4 | 14.7 | 12.7 | 14.1 | 11.2 | 16.1 | 16.1 | 14.3 | 16.2 | 12.8 |
| | KW | 2.41 | 2.41 | 2.38 | 2.46 | 2.55 | 2.54 | 2.54 | 2.50 | 2.56 | 2.65 | 2.67 | 2.67 | 2.61 | 2.67 | 2.75 |

**NOTE:** ALL CAPACITIES INCLUDE INDOOR FAN HEAT. KW VALUES ARE FOR THE SYSTEM (OUTDOOR + INDOOR).

### Multipliers for determining the performance with other indoor sections.

**NOTE:** For dry bulb temperatures different than those listed (between 73-87 °F), sensible capacity increases by 1060 BTUH per 1000 CFM per degree above the listed temperature and decreases by 1060 BTUH per 1000 CFM per degree below the listed temperature.

| Air Handlers | Coils | T.C. | S.C. | KW |
|---|---|---|---|---|
| – | FC/MC/PC32 | 1.00 | 1.00 | 1.00 |
| – | FC/MC/PC35 | 1.00 | 1.00 | 1.00 |
| – | FC/MC/PC36 | 1.00 | 1.00 | 1.00 |
| – | FC/MC/PC37 | 1.00 | 1.00 | 1.00 |
| – | FC/MC/PC43 | 1.00 | 1.00 | 1.00 |
| – | UC36 | 1.00 | 1.00 | 1.00 |
| AHE24B | – | 1.02 | 1.04 | 0.93 |
| AHE30B | – | 1.02 | 1.04 | 0.93 |
| AHE36C | – | 1.05 | 1.11 | 0.92 |
| AHP30 | – | 1.00 | 1.01 | 1.00 |
| AHR24B | – | 0.99 | 0.99 | 0.99 |
| AHX30 | – | 1.00 | 1.01 | 0.92 |

| Air Handlers | Coils | T.C. | S.C. | KW |
|---|---|---|---|---|
| AHX36 | – | 1.00 | 1.01 | 0.92 |
| AV*36 | – | 1.00 | 1.04 | 0.92 |
| F4FP036 | – | 1.00 | 1.00 | 1.00 |
| F6FP030 | – | 1.00 | 1.01 | 0.93 |
| F6FP036 | – | 1.00 | 1.02 | 0.92 |
| MV12B | FC/MC35B | 1.00 | 1.04 | 0.92 |
| MV12B | FC/MC36B | 1.00 | 1.04 | 0.92 |
| MV12B | FC/MC43B | 1.00 | 1.04 | 0.92 |
| MX12B | FC/MC35B | 1.03 | 1.04 | 0.91 |
| MX12B | FC/MC36B | 1.01 | 1.01 | 0.91 |
| MX12B | FC/MC43B | 1.03 | 1.02 | 0.90 |

**Continued on next page.**

| Furnaces | Coils | T.C. | S.C. | KW |
|---|---|---|---|---|
| T*(8,L)V*A12 | FC/MC/PC32A | 1.00 | 1.02 | 0.96 |
| T*(8,L)V*A12 | FC/MC/PC36A | 1.00 | 1.01 | 0.92 |
| T*(8,L)V*A12 | FC/MC/PC37A | 1.00 | 1.02 | 0.92 |
| T*(8,L)V*A12 | UC36A | 0.98 | 0.99 | 0.94 |
| T*(8,L)V*B12 | FC/MC/PC35B | 1.00 | 1.01 | 0.92 |
| T*(8,L)V*B12 | FC/MC/PC36B | 1.00 | 1.02 | 0.92 |
| T*(8,L)V*B12 | FC/MC/PC43B | 1.00 | 1.01 | 0.92 |
| T*(8,L)V*B12 | UC36B | 0.98 | 1.00 | 0.94 |
| T*(8,L)X*A12 | FC/MC/PC32A | 1.00 | 1.01 | 0.96 |
| T*(8,L)X*A12 | FC/MC/PC36A | 1.00 | 1.01 | 0.92 |
| T*(8,L)X*A12 | FC/MC/PC37A | 1.00 | 1.02 | 0.92 |
| T*(8,L)X*B12 | FC/MC/PC35B | 1.00 | 1.02 | 0.92 |
| T*(8,L)X*B12 | FC/MC/PC36B | 1.00 | 1.01 | 0.92 |
| T*(8,L)X*B12 | FC/MC/PC43B | 1.00 | 1.02 | 0.92 |
| T*9V*A10 | FC/MC/PC32A | 1.01 | 1.01 | 0.96 |
| T*9V*A10 | FC/MC/PC36A | 1.00 | 1.01 | 0.96 |
| T*9V*A10 | FC/MC/PC37A | 1.03 | 1.03 | 0.96 |
| T*9(C,V)*B12 | FC/MC/PC35B | 1.00 | 1.02 | 0.92 |
| T*9(C,V)*B12 | FC/MC/PC36B | 1.00 | 1.01 | 0.92 |
| T*9(C,V)*B12 | FC/MC/PC43B | 1.00 | 1.02 | 0.92 |
| T*9(C,V)*B12 | UC36B | 0.98 | 1.00 | 0.94 |

| Furnaces | Coils | T.C. | S.C. | KW |
|---|---|---|---|---|
| T*9X*A10 | FC/MC/PC32A | 1.00 | 1.01 | 0.94 |
| T*9X*A10 | FC/MC/PC36A | 1.01 | 1.01 | 0.94 |
| T*9X*A10 | FC/MC/PC37A | 1.02 | 1.02 | 0.95 |
| T*9X*B12 | FC/MC/PC36B | 1.00 | 1.01 | 0.92 |
| T*9X*C16 | FC/MC/PC35C | 0.99 | 0.98 | 0.91 |
| T*9X*C16 | FC/MC/PC36C | 1.00 | 1.01 | 0.92 |
| T*9X*C20 | FC/MC/PC35C | 1.00 | 1.02 | 0.92 |
| T*9X*C20 | FC/MC/PC36C | 1.00 | 1.01 | 0.92 |
| Y*(8,L)C*A12 | FC/MC/PC32A | 1.00 | 1.02 | 0.96 |
| Y*(8,L)C*A12 | FC/MC/PC36A | 1.00 | 1.01 | 0.92 |
| Y*(8,L)C*A12 | FC/MC/PC37A | 1.00 | 1.02 | 0.92 |
| Y*(8,L)C*A12 | UC36A | 0.98 | 0.99 | 0.94 |
| Y*(8,L)C*B12 | FC/MC/PC35B | 1.00 | 1.01 | 0.92 |
| Y*(8,L)C*B12 | FC/MC/PC36B | 1.00 | 1.02 | 0.92 |
| Y*(8,L)C*B12 | FC/MC/PC43B | 1.00 | 1.01 | 0.92 |
| Y*(8,L)C*B12 | UC36B | 0.98 | 1.00 | 0.94 |
| Y*9C*B12 | FC/MC/PC35B | 1.00 | 1.02 | 0.92 |
| Y*9C*B12 | FC/MC/PC36B | 1.00 | 1.01 | 0.92 |
| Y*9C*B12 | FC/MC/PC43B | 1.00 | 1.02 | 0.92 |
| Y*9C*B12 | UC36B | 0.98 | 1.00 | 0.94 |

## COOLING PERFORMANCE DATA

| AIR CONDITIONER MODEL NO. | | TCGD30S41S3(H)(E) | | | | | | | | | | | | | | |
|---|---|---|---|---|---|---|---|---|---|---|---|---|---|---|---|---|
| INDOOR COIL MODEL NO. | | FC/MC/PC32 | | | | | | | | | | | | | | |
| CONDENSING ENTERING AIR TEMPERATURE | IDCFM | 800 | | | | | 1000 | | | | | 1200 | | | | |
| | ID DB (°F) | 80 | 80 | 75 | 80 | 80 | 80 | 80 | 75 | 80 | 80 | 80 | 80 | 75 | 80 | 80 |
| | ID WB (°F) | 57 | 62 | 62 | 67 | 72 | 57 | 62 | 62 | 67 | 72 | 57 | 62 | 62 | 67 | 72 |
| 65 | T.C. | 30.2 | 33.4 | 32.8 | 35.2 | 36.5 | 31.7 | 33.9 | 33.4 | 35.5 | 36.7 | 33.2 | 34.3 | 34.1 | 35.9 | 36.9 |
| | S.C. | 28.9 | 26.3 | 22.1 | 21.6 | 16.3 | 30.3 | 29.5 | 24.0 | 23.0 | 17.4 | 31.8 | 32.6 | 25.9 | 24.4 | 18.5 |
| | KW | 2.18 | 2.20 | 2.20 | 2.21 | 2.23 | 2.27 | 2.28 | 2.29 | 2.42 | 2.32 | 2.37 | 2.36 | 2.38 | 2.63 | 2.41 |
| 75 | T.C. | 28.0 | 30.7 | 30.0 | 32.9 | 34.7 | 29.7 | 31.5 | 30.7 | 33.3 | 34.8 | 31.3 | 32.4 | 31.5 | 33.8 | 35.0 |
| | S.C. | 26.9 | 25.2 | 20.9 | 20.7 | 15.6 | 28.4 | 27.6 | 23.0 | 22.4 | 16.7 | 30.0 | 30.1 | 25.1 | 24.1 | 17.8 |
| | KW | 2.36 | 2.37 | 2.37 | 2.40 | 2.43 | 2.46 | 2.47 | 2.47 | 2.49 | 2.53 | 2.56 | 2.56 | 2.56 | 2.58 | 2.62 |
| 85 | T.C. | 25.9 | 28.0 | 27.2 | 30.6 | 32.8 | 27.7 | 29.2 | 28.0 | 31.2 | 33.0 | 29.5 | 30.5 | 28.8 | 31.7 | 33.1 |
| | S.C. | 24.8 | 24.0 | 19.8 | 19.8 | 15.0 | 26.5 | 25.8 | 22.0 | 21.8 | 16.1 | 28.2 | 27.5 | 24.3 | 23.8 | 17.1 |
| | KW | 2.54 | 2.54 | 2.54 | 2.59 | 2.64 | 2.65 | 2.65 | 2.64 | 2.56 | 2.73 | 2.76 | 2.75 | 2.74 | 2.54 | 2.83 |
| 95 | T.C. | 23.8 | 25.3 | 24.5 | 28.3 | 31.0 | 25.7 | 26.9 | 25.3 | 29.0 | 31.1 | 27.6 | 28.6 | 26.2 | 29.7 | 31.3 |
| | S.C. | 22.8 | 22.9 | 18.6 | 18.9 | 14.4 | 24.6 | 23.9 | 21.0 | 21.2 | 15.4 | 26.5 | 25.0 | 23.5 | 23.5 | 16.5 |
| | KW | 2.72 | 2.72 | 2.71 | 2.78 | 2.84 | 2.84 | 2.83 | 2.81 | 2.64 | 2.94 | 2.95 | 2.94 | 2.92 | 2.49 | 3.04 |
| 105 | T.C. | 21.8 | 23.1 | 21.7 | 25.2 | 27.9 | 23.4 | 24.6 | 22.6 | 25.8 | 28.0 | 25.0 | 26.1 | 23.5 | 26.4 | 28.1 |
| | S.C. | 20.9 | 21.1 | 17.4 | 17.7 | 13.4 | 22.4 | 22.2 | 19.3 | 19.3 | 14.5 | 24.0 | 23.3 | 21.3 | 20.8 | 15.7 |
| | KW | 2.91 | 3.02 | 2.88 | 2.96 | 3.04 | 3.03 | 3.08 | 2.99 | 2.90 | 3.14 | 3.15 | 3.14 | 3.10 | 2.84 | 3.24 |
| 115 | T.C. | 19.8 | 21.1 | 19.1 | 22.2 | 25.0 | 21.2 | 22.4 | 19.9 | 22.7 | 25.0 | 22.6 | 23.6 | 20.8 | 23.2 | 25.0 |
| | S.C. | 19.0 | 19.3 | 16.2 | 16.7 | 12.5 | 20.3 | 20.5 | 17.7 | 17.4 | 13.7 | 21.6 | 21.6 | 19.2 | 18.2 | 14.9 |
| | KW | 3.10 | 3.31 | 3.05 | 3.14 | 3.23 | 3.22 | 3.33 | 3.17 | 3.16 | 3.33 | 3.34 | 3.34 | 3.29 | 3.18 | 3.43 |
| 125 | T.C. | 17.8 | 19.0 | 16.4 | 19.2 | 22.0 | 19.0 | 20.1 | 17.3 | 19.6 | 22.0 | 20.1 | 21.2 | 18.2 | 20.0 | 22.0 |
| | S.C. | 17.1 | 17.5 | 15.1 | 15.6 | 11.6 | 18.2 | 18.7 | 16.1 | 15.6 | 12.9 | 19.2 | 20.0 | 17.1 | 15.6 | 14.2 |
| | KW | 3.28 | 3.61 | 3.22 | 3.31 | 3.42 | 3.41 | 3.57 | 3.34 | 3.42 | 3.52 | 3.53 | 3.54 | 3.47 | 3.53 | 3.63 |

**NOTE:** ALL CAPACITIES INCLUDE INDOOR FAN HEAT. KW VALUES ARE FOR THE SYSTEM (OUTDOOR + INDOOR).

### Multipliers for determining the performance with other indoor sections.

**NOTE:** For dry bulb temperatures different than those listed (between 73-87 °F), sensible capacity increases by 1060 BTUH per 1000 CFM per degree above the listed temperature and decreases by 1060 BTUH per 1000 CFM per degree below the listed temperature.

| Air Handlers | Coils | T.C. | S.C. | KW |
|---|---|---|---|---|
| – | FC/MC/PC32 | 1.00 | 1.00 | 1.00 |
| – | FC/MC/PC35 | 1.00 | 1.00 | 1.00 |
| – | FC/MC/PC37 | 1.00 | 1.00 | 1.00 |
| – | FC/MC/PC43 | 1.00 | 1.00 | 1.00 |
| AHE30B | – | 1.01 | 1.02 | 0.95 |
| AHE36C | – | 1.04 | 1.05 | 0.94 |
| AHP30 | – | 1.00 | 1.00 | 1.00 |
| AHP36 | – | 1.00 | 1.00 | 1.00 |
| AHR30B | – | 1.01 | 1.06 | 1.01 |
| AHR36B | – | 1.03 | 1.05 | 1.03 |
| AHX30 | – | 1.01 | 1.06 | 0.95 |
| AHX36 | – | 1.03 | 1.06 | 0.95 |
| AV*36 | – | 1.03 | 1.04 | 0.95 |

| Air Handlers | Coils | T.C. | S.C. | KW |
|---|---|---|---|---|
| F4FP040 | – | 1.00 | 1.00 | 1.00 |
| F6FP030 | – | 1.01 | 1.03 | 0.97 |
| F6FP036 | – | 1.01 | 1.02 | 0.93 |
| MV12B | FC/MC35B | 1.00 | 1.03 | 0.92 |
| MV12B | FC/MC43B | 1.00 | 1.03 | 0.92 |
| MV16C | FC/MC35C | 1.03 | 1.03 | 0.95 |
| MV16C | FC/MC43C | 1.03 | 1.03 | 0.95 |
| MX12B | FC/MC35B | 1.03 | 1.08 | 0.95 |
| MX12B | FC/MC43B | 1.05 | 1.10 | 0.94 |
| MX16C | FC/MC35C | 1.03 | 1.06 | 0.91 |
| MX16C | FC/MC43C | 1.04 | 1.04 | 0.92 |

**Continued on next page.**

| Furnaces | Coils | T.C. | S.C. | KW |
|---|---|---|---|---|
| T*(8,L)V*A12 | FC/MC/PC32A | 1.01 | 1.04 | 1.01 |
| T*(8,L)V*A12 | FC/MC/PC37A | 1.03 | 1.04 | 0.98 |
| T*(8,L)V*B12 | FC/MC/PC35B | 1.02 | 1.02 | 0.98 |
| T*(8,L)V*B12 | FC/MC/PC43B | 1.03 | 1.05 | 0.95 |
| T*(8,L)V*C16 | FC/MC/PC35C | 1.02 | 1.05 | 0.94 |
| T*(8,L)V*C16 | FC/MC/PC43C | 1.03 | 1.05 | 0.95 |
| T*(8,L)V*C20 | FC/MC/PC35C | 1.03 | 1.07 | 0.95 |
| T*(8,L)V*C20 | FC/MC/PC43C | 1.03 | 1.05 | 0.95 |
| T*(8,L)X*A12 | FC/MC/PC32A | 1.01 | 1.02 | 1.01 |
| T*(8,L)X*A12 | FC/MC/PC37A | 1.03 | 1.09 | 0.99 |
| T*(8,L)X*B12 | FC/MC/PC35B | 1.03 | 1.09 | 0.99 |
| T*(8,L)X*B12 | FC/MC/PC43B | 1.03 | 1.09 | 0.95 |
| T*(8,L)X*C16 | FC/MC/PC35C | 1.03 | 1.09 | 0.95 |
| T*(8,L)X*C16 | FC/MC/PC43C | 0.97 | 0.92 | 0.89 |
| T*(8,L)X*C20 | FC/MC/PC35C | 0.99 | 0.98 | 0.91 |
| T*(8,L)X*C20 | FC/MC/PC43C | 1.02 | 1.01 | 0.94 |
| T*9(C,V)*B12 | FC/MC/PC35B | 1.01 | 1.05 | 0.97 |
| T*9(C,V)*B12 | FC/MC/PC43B | 1.03 | 1.05 | 0.99 |
| T*9(C,V)*C16 | FC/MC/PC35C | 1.02 | 1.05 | 0.94 |
| T*9(C,V)*C16 | FC/MC/PC43C | 1.03 | 1.05 | 0.95 |
| T*9(C,V)*C20 | FC/MC/PC35C | 1.02 | 1.05 | 0.94 |

| Furnaces | Coils | T.C. | S.C. | KW |
|---|---|---|---|---|
| T*9(C,V)*C20 | FC/MC/PC43C | 1.03 | 1.05 | 0.95 |
| T*9X*B12 | FC/MC/PC35B | 1.03 | 1.09 | 0.94 |
| T*9X*B12 | FC/MC/PC43B | 1.03 | 1.09 | 0.99 |
| T*9X*C16 | FC/MC/PC35C | 1.03 | 1.07 | 0.94 |
| T*9X*C16 | FC/MC/PC43C | 1.03 | 1.09 | 0.95 |
| T*9X*C20 | FC/MC/PC43C | 0.97 | 0.92 | 0.89 |
| Y*(8,L)C*A12 | FC/MC/PC32A | 1.01 | 1.04 | 1.01 |
| Y*(8,L)C*A12 | FC/MC/PC37A | 1.03 | 1.04 | 0.98 |
| Y*(8,L)C*B12 | FC/MC/PC35B | 1.02 | 1.02 | 0.98 |
| Y*(8,L)C*B12 | FC/MC/PC43B | 1.03 | 1.05 | 0.95 |
| Y*(8,L)C*C16 | FC/MC/PC35C | 1.02 | 1.05 | 0.94 |
| Y*(8,L)C*C16 | FC/MC/PC43C | 1.03 | 1.05 | 0.95 |
| Y*(8,L)C*C20 | FC/MC/PC35C | 1.03 | 1.07 | 0.95 |
| Y*(8,L)C*C20 | FC/MC/PC43C | 1.03 | 1.05 | 0.95 |
| Y*9C*B12 | FC/MC/PC35B | 1.01 | 1.05 | 0.97 |
| Y*9C*B12 | FC/MC/PC43B | 1.03 | 1.05 | 0.99 |
| Y*9C*C16 | FC/MC/PC35C | 1.02 | 1.05 | 0.94 |
| Y*9C*C16 | FC/MC/PC43C | 1.03 | 1.05 | 0.95 |
| Y*9C*C20 | FC/MC/PC35C | 1.02 | 1.05 | 0.94 |
| Y*9C*C20 | FC/MC/PC43C | 1.03 | 1.05 | 0.95 |

## COOLING PERFORMANCE DATA

| AIR CONDITIONER MODEL NO. | | TCGD36S41S3(H)(E) | | | | | | | | | | | | | | |
|---|---|---|---|---|---|---|---|---|---|---|---|---|---|---|---|---|
| INDOOR COIL MODEL NO. | | FC/MC/PC37 | | | | | | | | | | | | | | |
| CONDENSING ENTERING AIR TEMPERATURE | IDCFM | 1000 | | | | | 1200 | | | | | 1400 | | | | |
| | ID DB (°F) | 80 | 80 | 75 | 80 | 80 | 80 | 80 | 75 | 80 | 80 | 80 | 80 | 75 | 80 | 80 |
| | ID WB (°F) | 57 | 62 | 62 | 67 | 72 | 57 | 62 | 62 | 67 | 72 | 57 | 62 | 62 | 67 | 72 |
| 65 | T.C. | 35.3 | 37.4 | 37.0 | 39.3 | 40.4 | 36.3 | 38.1 | 37.4 | 39.7 | 40.2 | 37.3 | 38.8 | 37.8 | 40.1 | 40.1 |
| | S.C. | 33.1 | 29.8 | 25.3 | 24.2 | 18.1 | 34.1 | 31.8 | 26.8 | 25.2 | 18.5 | 35.2 | 33.8 | 28.3 | 26.1 | 18.9 |
| | KW | 2.40 | 2.42 | 2.41 | 2.44 | 2.44 | 2.49 | 2.50 | 2.50 | 2.53 | 2.53 | 2.58 | 2.58 | 2.60 | 2.61 | 2.63 |
| 75 | T.C. | 33.8 | 35.6 | 35.1 | 37.7 | 39.3 | 34.9 | 36.4 | 35.6 | 38.1 | 39.3 | 36.1 | 37.2 | 36.1 | 38.5 | 39.3 |
| | S.C. | 31.7 | 29.4 | 24.8 | 23.9 | 17.9 | 32.9 | 31.4 | 26.5 | 25.1 | 18.5 | 34.1 | 33.3 | 28.2 | 26.3 | 19.1 |
| | KW | 2.61 | 2.63 | 2.62 | 2.66 | 2.67 | 2.71 | 2.72 | 2.71 | 2.75 | 2.77 | 2.80 | 2.80 | 2.80 | 2.83 | 2.86 |
| 85 | T.C. | 32.4 | 33.8 | 33.3 | 36.2 | 38.1 | 33.6 | 34.7 | 33.8 | 36.6 | 38.3 | 34.8 | 35.6 | 34.4 | 37.0 | 38.4 |
| | S.C. | 30.4 | 29.0 | 24.3 | 23.5 | 17.7 | 31.7 | 30.9 | 26.1 | 25.0 | 18.5 | 33.0 | 32.8 | 28.0 | 26.5 | 19.3 |
| | KW | 2.82 | 2.84 | 2.84 | 2.88 | 2.91 | 2.92 | 2.93 | 2.92 | 2.96 | 3.00 | 3.02 | 3.03 | 3.01 | 3.05 | 3.09 |
| 95 | T.C. | 31.0 | 32.0 | 31.5 | 34.6 | 37.0 | 32.3 | 33.0 | 32.1 | 35.0 | 37.3 | 33.6 | 34.0 | 32.7 | 35.4 | 37.6 |
| | S.C. | 29.0 | 28.6 | 23.7 | 23.1 | 17.5 | 30.5 | 30.5 | 25.8 | 24.9 | 18.5 | 31.9 | 32.3 | 27.9 | 26.6 | 19.5 |
| | KW | 3.04 | 3.05 | 3.05 | 3.09 | 3.14 | 3.14 | 3.15 | 3.13 | 3.18 | 3.23 | 3.24 | 3.25 | 3.22 | 3.27 | 3.32 |
| 105 | T.C. | 28.0 | 28.9 | 27.8 | 31.1 | 34.3 | 28.9 | 29.9 | 28.5 | 31.6 | 34.6 | 29.9 | 30.9 | 29.2 | 32.0 | 34.9 |
| | S.C. | 26.3 | 26.2 | 22.0 | 21.9 | 16.6 | 27.4 | 27.8 | 23.8 | 23.8 | 17.7 | 28.5 | 29.4 | 25.6 | 25.7 | 18.9 |
| | KW | 3.25 | 3.25 | 3.23 | 3.30 | 3.37 | 3.36 | 3.36 | 3.33 | 3.39 | 3.47 | 3.47 | 3.47 | 3.43 | 3.49 | 3.56 |
| 115 | T.C. | 25.0 | 25.9 | 24.3 | 27.8 | 31.7 | 25.7 | 26.9 | 25.1 | 28.2 | 32.0 | 26.4 | 27.9 | 25.9 | 28.7 | 32.3 |
| | S.C. | 23.7 | 23.9 | 20.3 | 20.8 | 15.8 | 24.4 | 25.2 | 21.8 | 22.8 | 17.0 | 25.2 | 26.6 | 23.4 | 24.7 | 18.3 |
| | KW | 3.45 | 3.46 | 3.42 | 3.50 | 3.60 | 3.57 | 3.57 | 3.52 | 3.60 | 3.70 | 3.68 | 3.69 | 3.63 | 3.70 | 3.79 |
| 125 | T.C. | 22.1 | 22.9 | 20.7 | 24.4 | 29.0 | 22.5 | 23.9 | 21.7 | 24.9 | 29.3 | 22.9 | 24.9 | 22.6 | 25.4 | 29.6 |
| | S.C. | 21.1 | 21.5 | 18.6 | 19.7 | 15.0 | 21.5 | 22.7 | 19.9 | 21.7 | 16.3 | 21.9 | 23.8 | 21.1 | 23.8 | 17.7 |
| | KW | 3.65 | 3.66 | 3.60 | 3.70 | 3.83 | 3.78 | 3.78 | 3.71 | 3.80 | 3.93 | 3.90 | 3.91 | 3.83 | 3.91 | 4.03 |

**NOTE:** ALL CAPACITIES INCLUDE INDOOR FAN HEAT. KW VALUES ARE FOR THE SYSTEM (OUTDOOR + INDOOR).

### Multipliers for determining the performance with other indoor sections.

**NOTE:** For dry bulb temperatures different than those listed (between 73-87 °F), sensible capacity increases by 1060 BTUH per 1000 CFM per degree above the listed temperature and decreases by 1060 BTUH per 1000 CFM per degree below the listed temperature.

| Air Handlers | Coils | T.C. | S.C. | KW |
|---|---|---|---|---|
| – | FC/MC/PC37 | 1.00 | 1.00 | 1.00 |
| – | FC/MC/PC43 | 1.00 | 1.00 | 1.00 |
| – | FC/MC/PC48 | 1.00 | 1.00 | 1.00 |
| – | UC48 | 1.00 | 1.00 | 1.00 |
| AHE36C | – | 1.02 | 1.02 | 0.93 |
| AHE42D | – | 1.02 | 1.04 | 0.92 |
| AHP36 | – | 1.00 | 1.00 | 1.00 |
| AHP42 | – | 1.00 | 1.00 | 1.00 |
| AHR36B | – | 0.99 | 0.99 | 0.99 |
| AHR42C | – | 1.02 | 1.02 | 0.99 |
| AHX36 | – | 1.01 | 1.01 | 0.96 |
| AHX42 | – | 1.01 | 1.02 | 0.94 |
| AV*36 | – | 1.00 | 1.02 | 0.92 |

| Air Handlers | Coils | T.C. | S.C. | KW |
|---|---|---|---|---|
| F5FP048 | – | 1.00 | 1.00 | 1.00 |
| F6FP042 | – | 1.02 | 1.04 | 0.98 |
| MV12B | FC/MC43B | 1.01 | 1.02 | 0.95 |
| MV12D | FC/MC48D | 1.00 | 1.02 | 0.92 |
| MV16C | FC/MC43C | 1.03 | 1.02 | 0.94 |
| MV16C | FC/MC48C | 1.03 | 1.02 | 0.94 |
| MV20D | FC/MC48D | 1.03 | 1.03 | 0.94 |
| MX12B | FC/MC43B | 1.01 | 1.02 | 0.95 |
| MX12D | FC/MC48D | 1.03 | 1.03 | 0.92 |
| MX16C | FC/MC43C | 1.01 | 1.01 | 0.91 |
| MX16C | FC/MC48C | 1.03 | 1.03 | 0.91 |

**Continued on next page.**

| Furnaces | Coils | T.C. | S.C. | KW |
|---|---|---|---|---|
| T*(8,L)V*A12 | FC/MC/PC37A | 0.97 | 0.93 | 0.97 |
| T*(8,L)V*B12 | FC/MC/PC43B | 1.01 | 1.02 | 1.01 |
| T*(8,L)V*C16 | FC/MC/PC43C | 1.02 | 1.02 | 0.97 |
| T*(8,L)V*C16 | FC/MC/PC48C | 1.03 | 1.05 | 0.94 |
| T*(8,L)V*C16 | UC48C | 0.99 | 1.00 | 0.95 |
| T*(8,L)V*C20 | FC/MC/PC43C | 1.02 | 1.02 | 0.93 |
| T*(8,L)V*C20 | FC/MC/PC48C | 1.03 | 1.05 | 0.94 |
| T*(8,L)V*C20 | UC48C | 0.99 | 1.00 | 0.95 |
| T*(8,L)X*A12 | FC/MC/PC37A | 1.01 | 1.02 | 0.98 |
| T*(8,L)X*B12 | FC/MC/PC43B | 1.01 | 1.02 | 0.98 |
| T*(8,L)X*C16 | FC/MC/PC43C | 1.01 | 1.00 | 0.96 |
| T*(8,L)X*C16 | FC/MC/PC48C | 1.02 | 1.02 | 0.97 |
| T*(8,L)X*C16 | UC48C | 0.98 | 1.00 | 0.93 |
| T*(8,L)X*C20 | FC/MC/PC43C | 1.02 | 1.03 | 0.96 |
| T*(8,L)X*C20 | FC/MC/PC48C | 1.02 | 1.04 | 0.98 |
| T*(8,L)X*C20 | UC48C | 0.99 | 1.02 | 0.95 |
| T*9(C,V)*B12 | FC/MC/PC43B | 1.01 | 1.02 | 1.01 |
| T*9(C,V)*C16 | FC/MC/PC43C | 1.01 | 1.02 | 0.97 |
| T*9(C,V)*C16 | FC/MC/PC48C | 1.03 | 1.05 | 0.98 |
| T*9(C,V)*C16 | UC48C | 0.99 | 1.00 | 0.95 |
| T*9(C,V)*C20 | FC/MC/PC43C | 1.02 | 1.02 | 0.97 |
| T*9(C,V)*C20 | FC/MC/PC48C | 1.03 | 1.07 | 0.98 |
| T*9(C,V)*C20 | UC48C | 1.00 | 1.03 | 1.00 |
| T*9(C,V)*D20 | FC/MC/PC48D | 1.03 | 1.06 | 0.94 |
| T*9(C,V)*D20 | UC48D | 0.99 | 1.01 | 0.95 |
| T*9X*B12 | FC/MC/PC43B | 1.01 | 1.02 | 0.98 |

| Furnaces | Coils | T.C. | S.C. | KW |
|---|---|---|---|---|
| T*9X*C16 | FC/MC/PC43C | 1.01 | 1.02 | 0.98 |
| T*9X*C16 | FC/MC/PC48C | 1.02 | 1.04 | 0.98 |
| T*9X*C16 | UC48C | 0.99 | 1.00 | 0.97 |
| T*9X*C20 | FC/MC/PC43C | 1.00 | 0.99 | 0.96 |
| T*9X*C20 | FC/MC/PC48C | 1.01 | 1.01 | 0.97 |
| T*9X*C20 | UC48C | 0.97 | 0.99 | 0.95 |
| T*9X*D20 | FC/MC/PC48D | 1.01 | 1.01 | 0.97 |
| T*9X*D20 | UC48D | 0.97 | 0.99 | 0.95 |
| Y*(8,L)C*A12 | FC/MC/PC37A | 0.97 | 0.93 | 0.97 |
| Y*(8,L)C*B12 | FC/MC/PC43B | 1.01 | 1.02 | 1.01 |
| Y*(8,L)C*C16 | FC/MC/PC43C | 1.02 | 1.02 | 0.97 |
| Y*(8,L)C*C16 | FC/MC/PC48C | 1.03 | 1.05 | 0.94 |
| Y*(8,L)C*C16 | UC48C | 0.99 | 1.00 | 0.95 |
| Y*(8,L)C*C20 | FC/MC/PC43C | 1.02 | 1.02 | 0.93 |
| Y*(8,L)C*C20 | FC/MC/PC48C | 1.03 | 1.05 | 0.94 |
| Y*(8,L)C*C20 | UC48C | 0.99 | 1.00 | 0.95 |
| Y*9C*B12 | FC/MC/PC43B | 1.01 | 1.02 | 1.01 |
| Y*9C*C16 | FC/MC/PC43C | 1.01 | 1.02 | 0.97 |
| Y*9C*C16 | FC/MC/PC48C | 1.03 | 1.05 | 0.98 |
| Y*9C*C16 | UC48C | 0.99 | 1.00 | 0.95 |
| Y*9C*C20 | FC/MC/PC43C | 1.02 | 1.02 | 0.97 |
| Y*9C*C20 | FC/MC/PC48C | 1.03 | 1.07 | 0.98 |
| Y*9C*C20 | UC48C | 1.00 | 1.03 | 1.00 |
| Y*9C*D20 | FC/MC/PC48D | 1.03 | 1.06 | 0.94 |
| Y*9C*D20 | UC48D | 0.99 | 1.01 | 0.95 |

## COOLING PERFORMANCE DATA

| AIR CONDITIONER MODEL NO. | TCGD42S41S4(H)(E) | | | | | | | | | | | | | | | |
|---|---|---|---|---|---|---|---|---|---|---|---|---|---|---|---|---|
| INDOOR COIL MODEL NO. | FC/MC/PC43 | | | | | | | | | | | | | | | |
| CONDENSING ENTERING AIR TEMPERATURE | IDCFM | 1200 | | | | | 1400 | | | | | 1600 | | | | |
| | ID DB (°F) | 80 | 80 | 75 | 80 | 80 | 80 | 80 | 75 | 80 | 80 | 80 | 80 | 75 | 80 | 80 |
| | ID WB (°F) | 57 | 62 | 62 | 67 | 72 | 57 | 62 | 62 | 67 | 72 | 57 | 62 | 62 | 67 | 72 |
| 65 | T.C. | 41.8 | 43.9 | 43.7 | 47.2 | 49.9 | 43.3 | 45.0 | 44.7 | 47.9 | 50.9 | 44.7 | 46.0 | 45.7 | 48.5 | 51.9 |
| | S.C. | 41.6 | 36.4 | 30.9 | 29.8 | 23.8 | 43.0 | 38.5 | 32.5 | 31.0 | 24.2 | 44.3 | 40.7 | 34.0 | 32.2 | 24.5 |
| | KW | 2.79 | 2.81 | 2.82 | 2.82 | 2.85 | 2.80 | 2.82 | 2.82 | 2.83 | 2.85 | 2.80 | 2.83 | 2.82 | 2.84 | 2.86 |
| 75 | T.C. | 39.8 | 41.2 | 41.3 | 45.1 | 48.2 | 41.4 | 42.3 | 42.2 | 45.7 | 49.0 | 42.9 | 43.3 | 43.2 | 46.4 | 49.8 |
| | S.C. | 39.5 | 35.2 | 29.8 | 29.1 | 23.1 | 41.0 | 37.4 | 31.6 | 30.6 | 23.8 | 42.5 | 39.7 | 33.5 | 32.1 | 24.5 |
| | KW | 3.08 | 3.10 | 3.10 | 3.13 | 3.17 | 3.10 | 3.11 | 3.11 | 3.14 | 3.18 | 3.12 | 3.13 | 3.12 | 3.15 | 3.19 |
| 85 | T.C. | 37.8 | 38.6 | 38.8 | 43.0 | 46.5 | 39.4 | 39.6 | 39.7 | 43.6 | 47.1 | 41.0 | 40.6 | 40.7 | 44.3 | 47.7 |
| | S.C. | 37.5 | 34.1 | 28.7 | 28.4 | 22.4 | 39.1 | 36.4 | 30.8 | 30.2 | 23.4 | 40.7 | 38.7 | 32.9 | 32.0 | 24.5 |
| | KW | 3.38 | 3.39 | 3.39 | 3.44 | 3.50 | 3.41 | 3.41 | 3.41 | 3.46 | 3.51 | 3.43 | 3.42 | 3.42 | 3.47 | 3.52 |
| 95 | T.C. | 35.8 | 35.9 | 36.3 | 40.9 | 44.8 | 37.5 | 36.9 | 37.3 | 41.5 | 45.2 | 39.2 | 37.9 | 38.2 | 42.1 | 45.6 |
| | S.C. | 35.4 | 33.0 | 27.6 | 27.7 | 21.7 | 37.1 | 35.3 | 30.0 | 29.8 | 23.0 | 38.8 | 37.6 | 32.3 | 31.9 | 24.4 |
| | KW | 3.67 | 3.68 | 3.68 | 3.76 | 3.82 | 3.71 | 3.70 | 3.70 | 3.77 | 3.83 | 3.75 | 3.72 | 3.72 | 3.79 | 3.84 |
| 105 | T.C. | 33.1 | 33.1 | 32.6 | 37.0 | 41.6 | 34.7 | 34.2 | 33.5 | 37.6 | 42.0 | 36.3 | 35.4 | 34.4 | 38.2 | 42.4 |
| | S.C. | 32.7 | 31.0 | 26.3 | 26.4 | 20.7 | 34.3 | 33.1 | 28.4 | 28.6 | 22.1 | 35.9 | 35.2 | 30.5 | 30.8 | 23.5 |
| | KW | 3.98 | 3.98 | 3.96 | 4.05 | 4.14 | 4.02 | 4.01 | 3.98 | 4.07 | 4.16 | 4.06 | 4.05 | 4.01 | 4.09 | 4.18 |
| 115 | T.C. | 30.5 | 30.2 | 28.9 | 33.3 | 38.4 | 32.0 | 31.6 | 29.8 | 33.8 | 38.8 | 33.4 | 33.0 | 30.8 | 34.4 | 39.3 |
| | S.C. | 30.2 | 29.1 | 25.0 | 25.1 | 19.8 | 31.6 | 30.9 | 26.8 | 27.4 | 21.3 | 33.1 | 32.7 | 28.7 | 29.6 | 22.7 |
| | KW | 4.27 | 4.27 | 4.22 | 4.33 | 4.45 | 4.32 | 4.31 | 4.26 | 4.36 | 4.48 | 4.37 | 4.36 | 4.29 | 4.39 | 4.51 |
| 125 | T.C. | 27.9 | 27.4 | 25.2 | 29.5 | 35.2 | 29.2 | 29.0 | 26.2 | 30.0 | 35.7 | 30.6 | 30.5 | 27.1 | 30.5 | 36.2 |
| | S.C. | 27.6 | 27.3 | 23.7 | 23.8 | 18.9 | 28.9 | 28.8 | 25.3 | 26.2 | 20.4 | 30.3 | 30.3 | 26.9 | 28.5 | 21.8 |
| | KW | 4.57 | 4.56 | 4.49 | 4.62 | 4.77 | 4.62 | 4.62 | 4.53 | 4.65 | 4.80 | 4.67 | 4.67 | 4.57 | 4.68 | 4.84 |

**NOTE:** ALL CAPACITIES INCLUDE INDOOR FAN HEAT. KW VALUES ARE FOR THE SYSTEM (OUTDOOR + INDOOR).

### Multipliers for determining the performance with other indoor sections.

**NOTE:** For dry bulb temperatures different than those listed (between 73-87 °F), sensible capacity increases by 1060 BTUH per 1000 CFM per degree above the listed temperature and decreases by 1060 BTUH per 1000 CFM per degree below the listed temperature.

| Air Handlers | Coils | T.C. | S.C. | KW |
|---|---|---|---|---|
| – | FC/MC/PC43 | 1.00 | 1.00 | 1.00 |
| – | FC/MC/PC48 | 1.01 | 1.01 | 1.01 |
| – | FC/MC/PC60 | 1.00 | 0.99 | 1.00 |
| – | FC/MC62 | 1.01 | 1.02 | 1.01 |
| – | FC64 | 1.01 | 1.03 | 0.99 |
| – | UC48 | 1.01 | 1.01 | 1.01 |
| AHE42D | – | 1.01 | 1.03 | 0.93 |
| AHE48D | – | 1.01 | 1.02 | 0.93 |
| AHE60D | – | 1.01 | 1.04 | 0.93 |
| AHP42 | – | 1.01 | 1.03 | 1.01 |
| AHP48 | – | 1.01 | 1.01 | 0.99 |
| AHP60 | – | 1.01 | 1.01 | 0.95 |
| AHR42C | – | 1.01 | 1.03 | 1.01 |
| AHR48D | – | 0.99 | 0.97 | 0.99 |
| AHR60D | – | 1.01 | 1.01 | 1.01 |
| AHX42 | – | 1.01 | 1.02 | 0.93 |
| AHX48 | – | 1.01 | 1.03 | 0.93 |
| AHX60 | – | 1.01 | 1.05 | 0.93 |
| AV*48 | – | 1.01 | 1.02 | 0.93 |
| AV*60 | – | 1.01 | 1.02 | 0.93 |
| F6FP042 | – | 1.01 | 1.04 | 0.95 |
| F6FP048 | – | 1.01 | 1.01 | 0.95 |
| F6FP060 | – | 1.01 | 1.05 | 0.95 |
| MV16C | FC/MC43C | 1.01 | 1.01 | 0.93 |
| MV16C | FC/MC48C | 1.01 | 1.02 | 0.95 |
| MV16C | FC60C | 1.01 | 1.01 | 0.97 |
| MV20D | FC/MC48D | 1.01 | 1.04 | 0.93 |
| MV20D | FC/MC60D | 1.01 | 1.01 | 0.95 |
| MV20D | FC/MC62D | 1.01 | 1.03 | 0.93 |
| MV20D | FC64D | 1.01 | 1.03 | 0.91 |
| MX16C | FC/MC43C | 1.01 | 1.01 | 0.93 |
| MX16C | FC/MC48C | 1.01 | 1.01 | 0.93 |
| MX16C | FC60C | 1.01 | 1.01 | 0.93 |
| MX20D | FC/MC48D | 1.01 | 1.01 | 0.93 |
| MX20D | FC/MC60D | 1.01 | 1.03 | 0.93 |
| MX20D | FC/MC62D | 1.01 | 1.06 | 0.91 |
| MX20D | FC64D | 1.01 | 1.06 | 0.89 |

| Furnaces | Coils | T.C. | S.C. | KW |
|---|---|---|---|---|
| T*(8,L)V*B12 | FC/MC/PC43B | 0.99 | 0.97 | 0.97 |
| T*(8,L)V*C16 | FC/MC/PC43C | 1.01 | 1.01 | 0.97 |
| T*(8,L)V*C16 | FC/MC/PC48C | 1.01 | 1.00 | 0.97 |
| T*(8,L)V*C16 | FC/MC/PC48D | 1.01 | 1.00 | 0.97 |
| T*(8,L)V*C16 | FC/MC/PC60D | 1.01 | 1.01 | 0.97 |
| T*(8,L)V*C16 | FC/MC62D | 1.01 | 1.03 | 0.97 |
| T*(8,L)V*C16 | FC/PC60C | 1.01 | 1.01 | 0.97 |
| T*(8,L)V*C16 | FC64D | 1.01 | 1.03 | 0.93 |
| T*(8,L)V*C16 | UC48C | 1.01 | 1.01 | 0.97 |
| T*(8,L)V*C16 | UC60C | 1.01 | 1.01 | 0.97 |
| T*(8,L)V*C20 | FC/MC/PC43C | 1.01 | 1.03 | 0.99 |
| T*(8,L)V*C20 | FC/MC/PC48C | 1.01 | 1.01 | 0.97 |
| T*(8,L)V*C20 | FC/MC/PC48D | 1.01 | 1.01 | 0.97 |
| T*(8,L)V*C20 | FC/MC/PC60D | 1.01 | 1.01 | 0.95 |
| T*(8,L)V*C20 | FC/MC62D | 1.01 | 1.03 | 0.95 |

**Continued on next page.**

| Furnaces | Coils | T.C. | S.C. | KW |
|---|---|---|---|---|
| T*(8,L)V*C20 | FC/PC60C | 1.01 | 1.01 | 0.95 |
| T*(8,L)V*C20 | FC64D | 1.01 | 1.03 | 0.93 |
| T*(8,L)V*C20 | UC48C | 1.01 | 1.01 | 0.95 |
| T*(8,L)V*C20 | UC60C | 1.01 | 1.01 | 0.97 |
| T*(8,L)X*B12 | FC/MC/PC43B | 1.00 | 0.99 | 0.96 |
| T*(8,L)X*C16 | FC/MC/PC43C | 1.01 | 1.04 | 0.95 |
| T*(8,L)X*C16 | FC/MC/PC48C | 1.01 | 1.01 | 0.93 |
| T*(8,L)X*C16 | FC/MC/PC48D | 1.01 | 1.01 | 0.93 |
| T*(8,L)X*C16 | FC/MC/PC60D | 1.01 | 1.01 | 0.93 |
| T*(8,L)X*C16 | FC/MC62D | 1.01 | 1.03 | 0.93 |
| T*(8,L)X*C16 | FC/PC60C | 1.01 | 1.01 | 0.93 |
| T*(8,L)X*C16 | FC64D | 1.01 | 1.04 | 0.91 |
| T*(8,L)X*C16 | UC48C | 1.01 | 1.01 | 0.93 |
| T*(8,L)X*C16 | UC60C | 1.01 | 1.01 | 0.93 |
| T*(8,L)X*C20 | FC/MC/PC43C | 1.01 | 1.02 | 0.95 |
| T*(8,L)X*C20 | FC/MC/PC48C | 1.01 | 1.04 | 0.93 |
| T*(8,L)X*C20 | FC/MC/PC48D | 1.01 | 1.04 | 0.93 |
| T*(8,L)X*C20 | FC/MC/PC60D | 1.01 | 1.04 | 0.93 |
| T*(8,L)X*C20 | FC/MC62D | 1.01 | 1.06 | 0.93 |
| T*(8,L)X*C20 | FC/PC60C | 1.01 | 1.04 | 0.93 |
| T*(8,L)X*C20 | FC64D | 1.01 | 1.07 | 0.91 |
| T*(8,L)X*C20 | UC48C | 1.01 | 1.04 | 0.93 |
| T*(8,L)X*C20 | UC60C | 1.01 | 1.04 | 0.95 |
| T*9(C,V)*C16 | FC/MC/PC43C | 1.01 | 1.01 | 0.99 |
| T*9(C,V)*C16 | FC/MC/PC48C | 1.01 | 1.02 | 0.97 |
| T*9(C,V)*C16 | FC/MC/PC48D | 1.01 | 1.02 | 0.97 |
| T*9(C,V)*C16 | FC/MC/PC60D | 1.00 | 1.00 | 1.00 |
| T*9(C,V)*C16 | FC/MC62D | 1.01 | 1.03 | 1.01 |
| T*9(C,V)*C16 | FC/PC60C | 1.00 | 1.00 | 1.00 |
| T*9(C,V)*C16 | FC64D | 1.01 | 1.03 | 0.97 |
| T*9(C,V)*C16 | UC48C | 1.01 | 1.01 | 0.97 |
| T*9(C,V)*C16 | UC60C | 1.00 | 0.99 | 1.00 |
| T*9(C,V)*C20 | FC/MC/PC43C | 1.01 | 1.01 | 0.99 |
| T*9(C,V)*C20 | FC/MC/PC48C | 1.01 | 1.02 | 0.99 |
| T*9(C,V)*C20 | FC/MC/PC48D | 1.01 | 1.02 | 0.99 |
| T*9(C,V)*C20 | FC/MC/PC60D | 1.01 | 1.00 | 0.99 |
| T*9(C,V)*C20 | FC/MC62D | 1.01 | 1.03 | 0.99 |
| T*9(C,V)*C20 | FC/PC60C | 1.01 | 1.00 | 0.99 |
| T*9(C,V)*C20 | FC64D | 1.01 | 1.03 | 0.95 |
| T*9(C,V)*C20 | UC48C | 1.01 | 1.01 | 0.99 |
| T*9(C,V)*C20 | UC60C | 1.00 | 1.00 | 0.98 |
| T*9(C,V)*D20 | FC/MC/PC48D | 1.01 | 1.01 | 0.97 |
| T*9(C,V)*D20 | FC/MC/PC60D | 1.01 | 1.01 | 0.97 |
| T*9(C,V)*D20 | FC/MC62D | 1.01 | 1.03 | 0.97 |
| T*9(C,V)*D20 | FC64D | 1.01 | 1.03 | 0.95 |
| T*9(C,V)*D20 | UC48D | 1.01 | 1.01 | 0.97 |
| T*9(C,V)*D20 | UC60D | 1.00 | 1.00 | 0.98 |
| T*9X*B12 | FC/MC/PC43B | 1.00 | 0.97 | 0.96 |
| T*9X*C16 | FC/MC/PC43C | 1.01 | 1.01 | 0.97 |
| T*9X*C16 | FC/MC/PC48C | 1.01 | 1.02 | 0.95 |
| T*9X*C16 | FC/MC/PC48D | 1.01 | 1.02 | 0.95 |
| T*9X*C16 | FC/MC/PC60D | 1.01 | 1.01 | 0.97 |
| T*9X*C16 | FC/MC62D | 1.01 | 1.03 | 0.95 |
| T*9X*C16 | FC/PC60C | 1.01 | 1.01 | 0.97 |
| T*9X*C16 | FC64D | 1.01 | 1.03 | 0.93 |
| T*9X*C16 | UC48C | 1.01 | 1.02 | 0.95 |
| T*9X*C16 | UC60C | 1.01 | 1.01 | 0.97 |
| T*9X*C20 | FC/MC/PC43C | 1.01 | 1.02 | 0.95 |

| Furnaces | Coils | T.C. | S.C. | KW |
|---|---|---|---|---|
| T*9X*C20 | FC/MC/PC48C | 1.01 | 1.02 | 0.95 |
| T*9X*C20 | FC/MC/PC48D | 1.01 | 1.02 | 0.95 |
| T*9X*C20 | FC/MC/PC60D | 1.01 | 1.01 | 0.95 |
| T*9X*C20 | FC/MC62D | 1.01 | 1.03 | 0.95 |
| T*9X*C20 | FC/PC60C | 1.01 | 1.01 | 0.95 |
| T*9X*C20 | FC64D | 1.01 | 1.03 | 0.91 |
| T*9X*C20 | UC48C | 1.01 | 1.02 | 0.95 |
| T*9X*C20 | UC60C | 1.01 | 1.01 | 0.95 |
| T*9X*D20 | FC/MC/PC48D | 1.01 | 1.02 | 0.93 |
| T*9X*D20 | FC/MC/PC60D | 1.01 | 1.04 | 0.93 |
| T*9X*D20 | FC/MC62D | 1.01 | 1.03 | 0.93 |
| T*9X*D20 | FC64D | 1.01 | 1.03 | 0.91 |
| T*9X*D20 | UC48D | 1.01 | 1.01 | 0.93 |
| T*9X*D20 | UC60D | 1.01 | 1.05 | 0.93 |
| Y*(8,L)C*B12 | FC/MC/PC43B | 0.99 | 0.97 | 0.97 |
| Y*(8,L)C*C16 | FC/MC/PC43C | 1.01 | 1.01 | 0.97 |
| Y*(8,L)C*C16 | FC/MC/PC48C | 1.01 | 1.00 | 0.97 |
| Y*(8,L)C*C16 | FC/MC/PC48D | 1.01 | 1.00 | 0.97 |
| Y*(8,L)C*C16 | FC/MC/PC60D | 1.01 | 1.01 | 0.97 |
| Y*(8,L)C*C16 | FC/MC62D | 1.01 | 1.03 | 0.97 |
| Y*(8,L)C*C16 | FC/PC60C | 1.01 | 1.01 | 0.97 |
| Y*(8,L)C*C16 | FC64D | 1.01 | 1.03 | 0.93 |
| Y*(8,L)C*C16 | UC48C | 1.01 | 1.01 | 0.97 |
| Y*(8,L)C*C16 | UC60C | 1.01 | 1.01 | 0.97 |
| Y*(8,L)C*C20 | FC/MC/PC43C | 1.01 | 1.03 | 0.99 |
| Y*(8,L)C*C20 | FC/MC/PC48C | 1.01 | 1.01 | 0.97 |
| Y*(8,L)C*C20 | FC/MC/PC48D | 1.01 | 1.01 | 0.97 |
| Y*(8,L)C*C20 | FC/MC/PC60D | 1.01 | 1.01 | 0.95 |
| Y*(8,L)C*C20 | FC/MC62D | 1.01 | 1.03 | 0.95 |
| Y*(8,L)C*C20 | FC/PC60C | 1.01 | 1.01 | 0.95 |
| Y*(8,L)C*C20 | FC64D | 1.01 | 1.03 | 0.93 |
| Y*(8,L)C*C20 | UC48C | 1.01 | 1.01 | 0.95 |
| Y*(8,L)C*C20 | UC60C | 1.01 | 1.01 | 0.97 |
| Y*9C*C16 | FC/MC/PC43C | 1.01 | 1.01 | 0.99 |
| Y*9C*C16 | FC/MC/PC48C | 1.01 | 1.02 | 0.97 |
| Y*9C*C16 | FC/MC/PC48D | 1.01 | 1.02 | 0.97 |
| Y*9C*C16 | FC/MC/PC60D | 1.00 | 1.00 | 1.00 |
| Y*9C*C16 | FC/MC62D | 1.01 | 1.03 | 1.01 |
| Y*9C*C16 | FC/PC60C | 1.00 | 1.00 | 1.00 |
| Y*9C*C16 | FC64D | 1.01 | 1.03 | 0.97 |
| Y*9C*C16 | UC48C | 1.01 | 1.01 | 0.97 |
| Y*9C*C16 | UC60C | 1.00 | 0.99 | 1.00 |
| Y*9C*C20 | FC/MC/PC43C | 1.01 | 1.01 | 0.99 |
| Y*9C*C20 | FC/MC/PC48C | 1.01 | 1.02 | 0.99 |
| Y*9C*C20 | FC/MC/PC48D | 1.01 | 1.02 | 0.99 |
| Y*9C*C20 | FC/MC/PC60D | 1.01 | 1.00 | 0.99 |
| Y*9C*C20 | FC/MC62D | 1.01 | 1.03 | 0.99 |
| Y*9C*C20 | FC/PC60C | 1.01 | 1.00 | 0.99 |
| Y*9C*C20 | FC64D | 1.01 | 1.03 | 0.95 |
| Y*9C*C20 | UC48C | 1.01 | 1.01 | 0.99 |
| Y*9C*C20 | UC60C | 1.00 | 1.00 | 0.98 |
| Y*9C*D20 | FC/MC/PC48D | 1.01 | 1.01 | 0.97 |
| Y*9C*D20 | FC/MC/PC60D | 1.01 | 1.01 | 0.97 |
| Y*9C*D20 | FC/MC62D | 1.01 | 1.03 | 0.97 |
| Y*9C*D20 | FC64D | 1.01 | 1.03 | 0.95 |
| Y*9C*D20 | UC48D | 1.01 | 1.01 | 0.97 |
| Y*9C*D20 | UC60D | 1.00 | 1.00 | 0.98 |

## COOLING PERFORMANCE DATA

| AIR CONDITIONER MODEL NO. | | TCGD48S41S3(H)(E) | | | | | | | | | | | | | | |
|---|---|---|---|---|---|---|---|---|---|---|---|---|---|---|---|---|
| INDOOR COIL MODEL NO. | | FC/MC/PC48 | | | | | | | | | | | | | | |
| CONDENSING ENTERING AIR TEMPERATURE | IDCFM | 1400 | | | | | 1600 | | | | | 1800 | | | | |
| | ID DB (°F) | 80 | 80 | 75 | 80 | 80 | 80 | 80 | 75 | 80 | 80 | 80 | 80 | 75 | 80 | 80 |
| | ID WB (°F) | 57 | 62 | 62 | 67 | 72 | 57 | 62 | 62 | 67 | 72 | 57 | 62 | 62 | 67 | 72 |
| 65 | T.C. | 49.7 | 51.4 | 50.5 | 55.8 | 54.6 | 52.0 | 53.1 | 51.9 | 56.3 | 55.4 | 54.4 | 54.7 | 53.2 | 56.9 | 56.3 |
| | S.C. | 46.9 | 42.8 | 35.7 | 35.7 | 25.9 | 48.8 | 45.6 | 37.9 | 37.1 | 27.3 | 50.8 | 48.3 | 40.1 | 38.5 | 28.8 |
| | KW | 3.36 | 3.41 | 3.42 | 3.45 | 3.50 | 3.38 | 3.42 | 3.43 | 3.46 | 3.52 | 3.41 | 3.43 | 3.45 | 3.47 | 3.53 |
| 75 | T.C. | 47.5 | 48.6 | 47.7 | 52.8 | 52.3 | 49.8 | 50.3 | 48.9 | 53.6 | 53.1 | 52.0 | 52.1 | 50.1 | 54.3 | 53.8 |
| | S.C. | 44.6 | 41.7 | 34.7 | 34.6 | 25.2 | 46.6 | 44.5 | 36.9 | 36.3 | 26.6 | 48.6 | 47.2 | 39.0 | 37.9 | 27.9 |
| | KW | 3.65 | 3.68 | 3.68 | 3.74 | 3.82 | 3.67 | 3.70 | 3.70 | 3.76 | 3.83 | 3.70 | 3.72 | 3.72 | 3.77 | 3.85 |
| 85 | T.C. | 45.4 | 45.8 | 44.8 | 49.9 | 50.1 | 47.5 | 47.6 | 46.0 | 50.8 | 50.7 | 49.7 | 49.4 | 47.1 | 51.7 | 51.3 |
| | S.C. | 42.3 | 40.6 | 33.7 | 33.5 | 24.6 | 44.4 | 43.4 | 35.8 | 35.4 | 25.8 | 46.4 | 46.1 | 37.9 | 37.3 | 27.0 |
| | KW | 3.93 | 3.95 | 3.95 | 4.04 | 4.14 | 3.97 | 3.98 | 3.97 | 4.06 | 4.15 | 4.00 | 4.01 | 3.99 | 4.08 | 4.17 |
| 95 | T.C. | 43.2 | 42.9 | 42.0 | 46.9 | 47.9 | 45.3 | 44.8 | 43.0 | 48.0 | 48.4 | 47.3 | 46.7 | 44.1 | 49.1 | 48.9 |
| | S.C. | 40.1 | 39.6 | 32.7 | 32.4 | 23.9 | 42.1 | 42.3 | 34.8 | 34.6 | 25.0 | 44.2 | 45.0 | 36.9 | 36.7 | 26.1 |
| | KW | 4.22 | 4.22 | 4.22 | 4.34 | 4.46 | 4.26 | 4.26 | 4.24 | 4.36 | 4.47 | 4.30 | 4.30 | 4.27 | 4.39 | 4.49 |
| 105 | T.C. | 39.8 | 39.3 | 37.3 | 42.4 | 43.5 | 41.6 | 41.1 | 38.4 | 43.4 | 44.0 | 43.4 | 42.8 | 39.5 | 44.3 | 44.5 |
| | S.C. | 36.8 | 36.7 | 30.7 | 30.7 | 22.7 | 38.6 | 39.0 | 32.7 | 32.8 | 23.7 | 40.5 | 41.2 | 34.7 | 34.9 | 24.8 |
| | KW | 4.52 | 4.52 | 4.49 | 4.62 | 4.77 | 4.57 | 4.57 | 4.52 | 4.65 | 4.79 | 4.61 | 4.61 | 4.55 | 4.67 | 4.81 |
| 115 | T.C. | 36.4 | 35.9 | 32.7 | 37.9 | 39.3 | 38.0 | 37.5 | 33.9 | 38.9 | 39.7 | 39.6 | 39.0 | 35.1 | 39.8 | 40.2 |
| | S.C. | 33.6 | 34.0 | 28.7 | 29.0 | 21.5 | 35.2 | 35.7 | 30.6 | 31.1 | 22.5 | 36.9 | 37.4 | 32.5 | 33.1 | 23.6 |
| | KW | 4.82 | 4.82 | 4.76 | 4.89 | 5.07 | 4.87 | 4.86 | 4.79 | 4.92 | 5.10 | 4.92 | 4.91 | 4.82 | 4.95 | 5.13 |
| 125 | T.C. | 33.1 | 32.4 | 28.1 | 33.5 | 35.0 | 34.5 | 33.8 | 29.4 | 34.4 | 35.5 | 35.9 | 35.3 | 30.6 | 35.2 | 35.9 |
| | S.C. | 30.4 | 31.2 | 26.7 | 27.3 | 20.3 | 31.9 | 32.5 | 28.5 | 29.3 | 21.3 | 33.3 | 33.7 | 30.4 | 31.3 | 22.3 |
| | KW | 5.11 | 5.11 | 5.02 | 5.17 | 5.38 | 5.17 | 5.16 | 5.06 | 5.20 | 5.41 | 5.22 | 5.21 | 5.09 | 5.23 | 5.44 |

**NOTE:** ALL CAPACITIES INCLUDE INDOOR FAN HEAT. KW VALUES ARE FOR THE SYSTEM (OUTDOOR + INDOOR).

### Multipliers for determining the performance with other indoor sections.

**NOTE:** For dry bulb temperatures different than those listed (between 73-87 °F), sensible capacity increases by 1060 BTUH per 1000 CFM per degree above the listed temperature and decreases by 1060 BTUH per 1000 CFM per degree below the listed temperature.

| Air Handlers | Coils | T.C. | S.C. | KW |
|---|---|---|---|---|
| – | FC/MC/PC48 | 1.00 | 1.00 | 1.00 |
| – | FC/MC/PC60 | 1.00 | 1.00 | 1.00 |
| – | UC48 | 1.00 | 1.00 | 1.00 |
| – | UC60 | 1.00 | 1.00 | 1.00 |
| AHE48D | – | 0.98 | 1.01 | 0.94 |
| AHP48 | – | 1.00 | 1.00 | 1.00 |
| AHP60 | – | 1.00 | 1.02 | 1.00 |
| AHR48D | – | 1.00 | 1.01 | 1.00 |
| AHX48 | – | 1.00 | 1.03 | 0.96 |
| AV*48 | – | 1.00 | 1.02 | 0.92 |
| AV*60 | – | 1.00 | 1.02 | 0.92 |
| F4FV060 | – | 1.00 | 1.01 | 0.96 |
| F5FP048 | – | 1.00 | 1.00 | 1.00 |
| F5FP060 | – | 1.00 | 1.00 | 1.00 |
| F6FP048 | – | 0.98 | 1.01 | 0.95 |
| MV16C | FC/MC48C | 1.00 | 1.02 | 0.92 |
| MV16C | FC60C | 0.99 | 1.01 | 0.95 |
| MV20D | FC/MC48D | 1.00 | 1.02 | 0.92 |
| MV20D | FC/MC60D | 1.00 | 1.02 | 0.92 |
| MX16C | FC/MC48C | 1.01 | 1.03 | 0.97 |
| MX20D | FC/MC48D | 1.00 | 0.99 | 0.94 |
| MX20D | FC/MC60D | 1.01 | 1.01 | 0.93 |

| Furnaces | Coils | T.C. | S.C. | KW |
|---|---|---|---|---|
| T*(8,L)V*C16 | FC/MC/PC48C | 1.00 | 1.02 | 1.00 |
| T*(8,L)V*C16 | FC/PC60C | 1.00 | 1.02 | 1.00 |
| T*(8,L)V*C20 | FC/MC/PC48C | 1.00 | 1.02 | 1.00 |
| T*(8,L)V*C20 | FC/PC60C | 1.00 | 1.02 | 0.96 |

| Furnaces | Coils | T.C. | S.C. | KW |
|---|---|---|---|---|
| T*(8,L)X*C16 | FC/MC/PC48C | 1.00 | 1.00 | 1.00 |
| T*(8,L)X*C16 | FC/PC60C | 1.00 | 1.01 | 1.00 |
| T*(8,L)X*C20 | FC/MC/PC48C | 1.00 | 1.00 | 1.00 |
| T*(8,L)X*C20 | FC/MC/PC60D | 1.00 | 1.01 | 1.00 |
| T*9(C,V)*C16 | FC/MC/PC48C | 1.00 | 1.01 | 1.00 |
| T*9(C,V)*C16 | FC/PC60C | 1.00 | 1.02 | 1.00 |
| T*9(C,V)*C20 | FC/MC/PC48C | 1.00 | 1.01 | 1.00 |
| T*9(C,V)*C20 | FC/PC60C | 1.00 | 1.02 | 1.00 |
| T*9(C,V)*D20 | FC/MC/PC48D | 1.00 | 1.02 | 1.00 |
| T*9(C,V)*D20 | FC/MC/PC60D | 1.00 | 1.02 | 1.00 |
| T*9X*C16 | FC/MC/PC48C | 1.00 | 1.01 | 1.00 |
| T*9X*C16 | FC/PC60C | 0.98 | 1.01 | 0.98 |
| T*9X*C16 | UC60C | 0.98 | 1.01 | 0.98 |
| T*9X*C20 | FC/MC/PC48C | 1.00 | 1.00 | 1.00 |
| T*9X*C20 | FC/PC60C | 0.98 | 1.01 | 0.98 |
| T*9X*C20 | UC60C | 0.98 | 1.01 | 0.98 |
| T*9X*D20 | FC/MC/PC48D | 1.00 | 1.01 | 1.00 |
| T*9X*D20 | FC/MC/PC60D | 0.99 | 0.98 | 0.99 |
| Y*(8,L)C*C16 | FC/MC/PC48C | 1.00 | 1.02 | 1.00 |
| Y*(8,L)C*C16 | FC/PC60C | 1.00 | 1.02 | 1.00 |
| Y*(8,L)C*C20 | FC/MC/PC48C | 1.00 | 1.02 | 1.00 |
| Y*(8,L)C*C20 | FC/PC60C | 1.00 | 1.02 | 0.96 |
| Y*9C*C16 | FC/MC/PC48C | 1.00 | 1.01 | 1.00 |
| Y*9C*C16 | FC/PC60C | 1.00 | 1.02 | 1.00 |
| Y*9C*C20 | FC/MC/PC48C | 1.00 | 1.01 | 1.00 |
| Y*9C*C20 | FC/PC60C | 1.00 | 1.02 | 1.00 |
| Y*9C*D20 | FC/MC/PC48D | 1.00 | 1.02 | 1.00 |
| Y*9C*D20 | FC/MC/PC60D | 1.00 | 1.02 | 1.00 |

## COOLING PERFORMANCE DATA

| AIR CONDITIONER MODEL NO. | | TCGD60S41S3(E) | | | | | | | | | | | | | | |
|---|---|---|---|---|---|---|---|---|---|---|---|---|---|---|---|---|
| INDOOR COIL MODEL NO. | | FC/MC/PC60 | | | | | | | | | | | | | | |
| CONDENSING ENTERING AIR TEMPERATURE | IDCFM | 1600 | | | | | 1800 | | | | | 2000 | | | | |
| | ID DB (°F) | 80 | 80 | 75 | 80 | 80 | 80 | 80 | 75 | 80 | 80 | 80 | 80 | 75 | 80 | 80 |
| | ID WB (°F) | 57 | 62 | 62 | 67 | 72 | 57 | 62 | 62 | 67 | 72 | 57 | 62 | 62 | 67 | 72 |
| 65 | T.C. | 55.5 | 61.1 | 59.4 | 62.4 | 64.9 | 57.7 | 62.9 | 60.1 | 63.8 | 66.9 | 59.9 | 64.7 | 60.8 | 65.3 | 68.8 |
| | S.C. | 54.5 | 49.8 | 40.0 | 39.7 | 28.6 | 56.4 | 52.4 | 42.4 | 41.2 | 30.8 | 58.3 | 54.9 | 44.9 | 42.7 | 32.9 |
| | KW | 3.68 | 3.73 | 3.74 | 3.76 | 3.80 | 3.77 | 3.81 | 3.81 | 3.85 | 3.88 | 3.86 | 3.90 | 3.89 | 3.94 | 3.95 |
| 75 | T.C. | 54.5 | 58.5 | 56.4 | 60.1 | 63.1 | 56.6 | 60.3 | 57.4 | 61.6 | 65.0 | 58.8 | 62.2 | 58.4 | 63.1 | 66.8 |
| | S.C. | 52.1 | 48.7 | 39.2 | 38.7 | 28.5 | 53.9 | 51.3 | 41.6 | 40.4 | 30.4 | 55.8 | 53.9 | 44.1 | 42.1 | 32.4 |
| | KW | 4.14 | 4.17 | 4.17 | 4.21 | 4.26 | 4.23 | 4.25 | 4.25 | 4.29 | 4.34 | 4.31 | 4.34 | 4.33 | 4.38 | 4.42 |
| 85 | T.C. | 53.4 | 55.9 | 53.3 | 57.7 | 61.4 | 55.5 | 57.8 | 54.7 | 59.3 | 63.1 | 57.7 | 59.7 | 56.0 | 60.8 | 64.8 |
| | S.C. | 49.7 | 47.6 | 38.3 | 37.7 | 28.4 | 51.5 | 50.2 | 40.8 | 39.6 | 30.1 | 53.2 | 52.8 | 43.2 | 41.5 | 31.8 |
| | KW | 4.59 | 4.61 | 4.60 | 4.66 | 4.71 | 4.68 | 4.69 | 4.69 | 4.74 | 4.80 | 4.77 | 4.77 | 4.77 | 4.82 | 4.89 |
| 95 | T.C. | 52.4 | 53.4 | 50.3 | 55.4 | 59.6 | 54.4 | 55.3 | 51.9 | 57.0 | 61.2 | 56.5 | 57.2 | 53.6 | 58.6 | 62.7 |
| | S.C. | 47.3 | 46.5 | 37.5 | 36.7 | 28.4 | 49.0 | 49.1 | 40.0 | 38.8 | 29.8 | 50.6 | 51.8 | 42.4 | 40.9 | 31.2 |
| | KW | 5.05 | 5.05 | 5.03 | 5.10 | 5.17 | 5.13 | 5.13 | 5.12 | 5.18 | 5.26 | 5.22 | 5.21 | 5.21 | 5.26 | 5.35 |
| 105 | T.C. | 49.4 | 50.0 | 46.7 | 51.7 | 55.4 | 51.7 | 52.0 | 48.3 | 53.3 | 57.2 | 54.0 | 53.9 | 50.0 | 54.9 | 58.9 |
| | S.C. | 44.6 | 44.4 | 36.2 | 35.2 | 26.9 | 46.3 | 46.6 | 38.6 | 37.4 | 28.4 | 48.0 | 48.9 | 41.0 | 39.5 | 29.8 |
| | KW | 5.64 | 5.63 | 5.61 | 5.70 | 5.78 | 5.73 | 5.72 | 5.70 | 5.78 | 5.87 | 5.83 | 5.81 | 5.80 | 5.86 | 5.97 |
| 115 | T.C. | 46.6 | 46.7 | 43.3 | 48.1 | 51.4 | 49.1 | 48.7 | 44.8 | 49.7 | 53.3 | 51.5 | 50.8 | 46.4 | 51.3 | 55.2 |
| | S.C. | 42.0 | 42.3 | 34.9 | 33.8 | 25.4 | 43.7 | 44.2 | 37.3 | 36.1 | 27.0 | 45.5 | 46.1 | 39.7 | 38.3 | 28.5 |
| | KW | 6.21 | 6.20 | 6.17 | 6.29 | 6.37 | 6.32 | 6.30 | 6.27 | 6.37 | 6.47 | 6.42 | 6.40 | 6.36 | 6.45 | 6.57 |
| 125 | T.C. | 43.7 | 43.5 | 39.8 | 44.5 | 47.3 | 46.4 | 45.5 | 41.3 | 46.1 | 49.4 | 49.1 | 47.6 | 42.9 | 47.7 | 51.5 |
| | S.C. | 39.3 | 40.3 | 33.7 | 32.5 | 24.0 | 41.1 | 41.8 | 36.0 | 34.7 | 25.6 | 43.0 | 43.2 | 38.3 | 37.0 | 27.2 |
| | KW | 6.79 | 6.77 | 6.73 | 6.87 | 6.96 | 6.90 | 6.88 | 6.83 | 6.95 | 7.06 | 7.01 | 6.98 | 6.93 | 7.03 | 7.16 |

**NOTE:** ALL CAPACITIES INCLUDE INDOOR FAN HEAT. KW VALUES ARE FOR THE SYSTEM (OUTDOOR + INDOOR).

### Multipliers for determining the performance with other indoor sections.

**NOTE:** For dry bulb temperatures different than those listed (between 73-87 °F), sensible capacity increases by 1060 BTUH per 1000 CFM per degree above the listed temperature and decreases by 1060 BTUH per 1000 CFM per degree below the listed temperature.

| Air Handlers | Coils | T.C. | S.C. | KW |
|---|---|---|---|---|
| – | FC/MC/PC60 | 1.00 | 1.00 | 1.00 |
| – | FC/MC62 | 1.00 | 1.00 | 1.00 |
| – | FC64 | 1.00 | 1.01 | 0.98 |
| – | UC60 | 1.00 | 1.00 | 1.00 |
| AHE60D | – | 1.03 | 1.03 | 0.98 |
| AHP60 | – | 1.00 | 1.00 | 1.00 |
| AHR60D | – | 1.00 | 1.00 | 1.00 |
| AHX60 | – | 1.03 | 1.04 | 0.98 |
| AV*60 | – | 1.02 | 1.01 | 1.02 |
| F4FV060 | – | 1.00 | 1.00 | 1.00 |
| F5FP060 | – | 1.00 | 1.00 | 1.00 |
| F6FP060 | – | 1.01 | 1.01 | 0.96 |
| MV20D | FC/MC60D | 1.00 | 1.00 | 1.00 |
| MV20D | FC/MC62D | 1.00 | 1.00 | 1.00 |
| MV20D | FC64D | 1.00 | 1.01 | 0.96 |
| MX20D | FC/MC60D | 1.01 | 1.01 | 0.96 |
| MX20D | FC/MC62D | 1.02 | 1.01 | 0.95 |
| MX20D | FC64D | 1.03 | 1.03 | 0.94 |

| Furnaces | Coils | T.C. | S.C. | KW |
|---|---|---|---|---|
| T*(8,L)V*C20 | FC/MC62D | 0.99 | 0.97 | 0.99 |
| T*(8,L)V*C20 | FC/PC60C | 0.97 | 0.96 | 0.97 |
| T*(8,L)V*C20 | FC64D | 1.00 | 0.98 | 0.94 |
| T*(8,L)V*C20 | UC60C | 0.95 | 0.91 | 0.95 |
| T*(8,L)X*C16 | FC/PC60C | 0.99 | 0.98 | 0.99 |
| T*(8,L)X*C16 | UC60C | 0.98 | 0.97 | 0.98 |
| T*(8,L)X*C20 | FC/MC/PC60D | 1.00 | 0.98 | 1.00 |
| T*(8,L)X*C20 | FC/MC62D | 1.00 | 0.98 | 1.00 |
| T*(8,L)X*C20 | FC64D | 1.00 | 0.98 | 0.92 |

| Furnaces | Coils | T.C. | S.C. | KW |
|---|---|---|---|---|
| T*(8,L)X*C20 | UC60C | 0.99 | 1.00 | 0.99 |
| T*(8,L)X*C20 | UC60D | 0.99 | 1.00 | 0.99 |
| T*9(C,V)*C20 | FC/MC62D | 0.98 | 0.97 | 0.98 |
| T*9(C,V)*C20 | FC/PC60C | 0.96 | 0.96 | 0.96 |
| T*9(C,V)*C20 | UC60C | 0.94 | 0.91 | 0.96 |
| T*9(C,V)*D20 | FC/MC/PC60D | 0.97 | 0.96 | 0.97 |
| T*9(C,V)*D20 | FC/MC62D | 0.98 | 0.97 | 0.98 |
| T*9(C,V)*D20 | UC60D | 0.94 | 0.91 | 0.95 |
| T*9X*C20 | FC/MC/PC60D | 0.99 | 0.98 | 0.99 |
| T*9X*C20 | FC/PC60C | 0.98 | 0.97 | 0.98 |
| T*9X*C20 | FC64D | 1.00 | 0.98 | 0.92 |
| T*9X*C20 | UC60C | 0.98 | 0.97 | 0.98 |
| T*9X*C20 | UC60D | 0.98 | 0.97 | 0.98 |
| T*9X*D20 | FC/MC/PC60D | 0.99 | 0.98 | 0.99 |
| T*9X*D20 | FC64D | 1.00 | 0.98 | 0.92 |
| T*9X*D20 | UC60D | 0.98 | 0.97 | 0.98 |
| Y*(8,L)C*C20 | FC/MC62D | 0.99 | 0.97 | 0.99 |
| Y*(8,L)C*C20 | FC/PC60C | 0.97 | 0.96 | 0.97 |
| Y*(8,L)C*C20 | FC64D | 1.00 | 0.98 | 0.94 |
| Y*(8,L)C*C20 | UC60C | 0.95 | 0.91 | 0.95 |
| Y*9C*C20 | FC/MC62D | 0.98 | 0.97 | 0.98 |
| Y*9C*C20 | FC/PC60C | 0.96 | 0.96 | 0.96 |
| Y*9C*C20 | FC64D | 1.00 | 0.98 | 0.98 |
| Y*9C*C20 | UC60C | 0.94 | 0.91 | 0.96 |
| Y*9C*D20 | FC/MC/PC60D | 0.97 | 0.96 | 0.97 |
| Y*9C*D20 | FC/MC62D | 0.98 | 0.97 | 0.98 |
| Y*9C*D20 | FC64D | 1.00 | 0.98 | 0.98 |
| Y*9C*D20 | UC60D | 0.94 | 0.91 | 0.95 |

# NOTES

Subject to change without notice. Published in U.S.A.
Copyright © 2012 by Johnson Controls, Inc. All rights reserved.

840623-YTG-A-0612
Supersedes: 556427-YTG-C-0611

**York International Corp.**
**5005 York Drive**
**Norman, OK 73069**