YORK®
Heating and Air Conditioning

TECHNICAL GUIDE

LATITUDE™ SERIES
SPLIT-SYSTEM AIR CONDITIONERS
13 SEER – R-410A – 1 PHASE
1.5 THRU 5 NOMINAL TONS
MODELS: TCGD18 THRU 60

AHRI CERTIFIED™ www.ahridirectory.org Unitary Small AC AHRI Standard 210/240 Certification applies only when the complete system is listed with AHRI

ISO 9000 REGISTRATION
ISO 9001 Certified Quality Management System

C US

LIMITED WARRANTY TO CONSUMERS Good Housekeeping Promises REPLACEMENT OR REFUND IF DEFECTIVE

Due to continuous product improvement, specifications are subject to change without notice.

Visit us on the web at
www.upgnet.com and www.york.com
Additional rating information can be found at:
www.ahridirectory.org

WARRANTY SUMMARY*

Standard 5-Years limited parts warranty.

Standard 5-Years limited compressor warranty.

Extended 10-Years limited parts and compressor warranty when product is registered online within 90 days of purchase for replacement or closing for new home construction.

*Does not apply to R-22 models, 3-Phase models, or internet sales.
See Limited Warranty certificate in User's Information Manual for details.

DESCRIPTION

The 13 SEER Series unit is the outdoor part of a versatile climate system. It is designed with a matching indoor coil component from Johnson Controls Unitary Products. Available for typical applications this climate system is supported with accessories and documents to serve specific functions.

FEATURES

- **Small Footprint** - Extremely lightweight with a compact footprint, it is a perfect fit for any application.
- **Quality Condenser Coils -** The coil is constructed of aluminum microchannel tubing and enhanced aluminum fins for reduced size and increased efficiency.
- **Coil Protection** - Coils are protected from damage by a sturdy polymer mesh and a coated steel wire coil guard.
- **Optional Factory E-Coat -** Available ElectroFin® coated coil on select models.
- **Protected Compressor -** Compressors are protected internally by a high pressure relief valve and a temperature sensor, and externally by the system high pressure switch. A factory installed liquid line filter-drier further protects the compressor against moisture and debris.
- **Environmentally Friendly Refrigerant -** The next generation refrigerant R-410A delivers environmentally friendly performance with zero ozone depletion.
- **Durable Finish -** The cabinet is made of G90-equivalent prepainted steel, with special primer formulas and matte champagne texture to insure less fading when exposed to sunlight. The coated steel wire fan and coil guards and pretreated, galvanized steel chassis components resist corrosion and rust creep.
- **Lower Installed Cost -** Installation time and costs are reduced by easy power and control wiring connections. The unit is factory charged for a 15-foot lineset. The small base dimension means less space is required on the ground or roof.
- **Top Discharge -** Warm air from the top mounted fan is blown up, away fro0m the structure and any landscaping. This allows compact location on multi-unit applications.
- **Competitive Sound Levels -** The upward air flow carries the normal operating noise away from the living area. The rigid top panel effectively isolates any motor sound. Isolator mounted compressor and the condenser coil muffle the normal fan motor and compressor operating sounds.
- **Low Maintenance -** Long life, permanently lubricated motor-bearings need no annual servicing.
- **Easy Service Access -** Fully exposed refrigerant connections and a single panel covering the electrical controls make for easy servicing of the unit.
- **Secured Service Valves -** Secured, re-usable service valves are provided on both the liquid and vapor sweat connections for ease of evacuating and charging.
- **Agency Listed -** Safety certified by CSA to UL 1995 / CSA 22.2. Performance certified to ANSI/AHRI Standard 210/240 in accordance with the Unitary Small Equipment certification program.

Physical and Electrical Data

MODEL		TCGD18 S41S3(H)(E)	TCGD24 S41S3(H)(E)	TCGD30 S41S3(H)(E)	TCGD36 S41S3(H)(E)	TCGD42 S41S4(H)(E)	TCGD48 S41S3(H)(E)	TCGD60 S41S3(E)
Unit Supply Voltage		208-230V, 1ϕ, 60Hz						
Normal Voltage Range [1]		187 to 252						
Minimum Circuit Ampacity		10.0	12.4	14.7	17.9	21.5	21.1	34.3
Max. Overcurrent Device Amps [2]		15	20	25	30	35	35	60
Min. Overcurrent Device Amps [3]		15	15	15	20	25	25	35
Compressor Type		Rotary	Recip	Recip	Recip	Recip	Recip	Scroll
Compressor Amps	Rated Load	7.6	9.3	10.6	13.1	16	15.7	26.2
	Locked Rotor	40	43	54	74	88	84	150
Crankcase Heater		No	No	No	No	No	No	No
Factory External Discharge Muffler		No	No	No	No	No	Yes	No
Factory External Check Valve		No	No	No	No	No	No	No
HS Kit Required with TXV [4]		Yes	Yes	Yes	Yes	Yes	Yes	No
Fan Motor Amps	Rated Load	0.5	0.8	1.4	1.5	1.5	1.5	1.5
Fan Diameter Inches		17.5	17.5	17.5	22.0	22.0	22.0	24.0
Fan Motor	Rated HP	1/12	1/8	1/4	1/4	1/4	1/4	1/4
	Nominal RPM	1100	1075	1100	850	850	850	850
	Nominal CFM	1400	1950	2050	3200	3050	2950	3600
Coil	Face Area Sq. Ft.	9.60	9.60	9.60	13.07	14.16	14.16	18.68
	Rows Deep	1	1	1	1	1	1	1
	Fins / Inch	23	23	23	23	23	23	23
Liquid Line Set OD (Field Installed)		3/8	3/8	3/8	3/8	3/8	3/8	3/8
Vapor Line Set OD (Field Installed)		5/8	3/4	3/4	3/4	7/8	7/8	7/8
Unit Charge (Lbs. - Oz.) [5]		3 - 3	3 - 13	3 - 14	4 - 9	4 - 10	4 - 9	5 - 6
Charge Per Foot, Oz.		0.58	0.62	0.62	0.62	0.67	0.67	0.67
Operating Weight Lbs.		97	129	131	145	164	173	195

Models with "H" on the end of the model number are shipped with a Hard Start Kit installed at the factory.

Models with "E" on the end of the model number have an ElectroFin® coating on the outdoor coil.

1. Rated in accordance with AHRI Standard 110-2012, utilization range "A".
2. Dual element fuses or HACR circuit breaker. Maximum allowable overcurrent protection.
3. Dual element fuses or HACR circuit breaker. Minimum recommended overcurrent protection.
4. See Hard Start Kit Accessory Installation Manual for Hard Start Kit part number for each model.
5. The Unit Charge is correct for the outdoor unit, smallest matched indoor unit, and 15 feet of refrigerant tubing. For tubing lengths other than 15 feet, add or subtract the amount of refrigerant, using the difference in length multiplied by the per foot value.

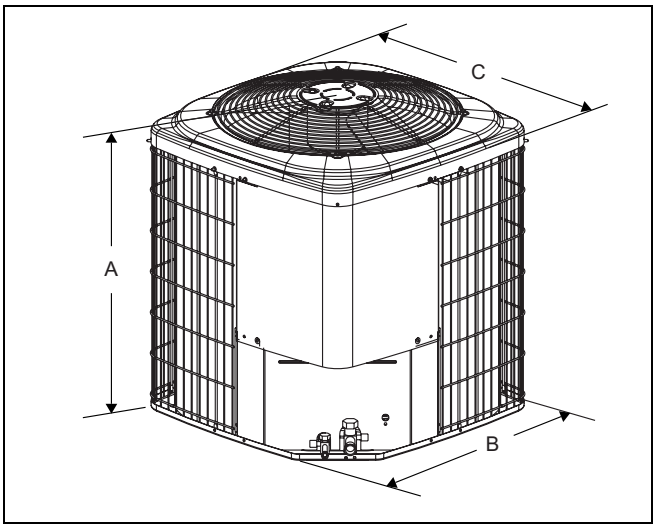

Unit Model	Dimensions (Inches)			Refrigerant Connection Service Valve Size	
	A	B	C	Liquid	Vapor
18	28-1/4	24	24	3/8	3/4
24	28-1/4	24	24		
30	28-1/4	24	24		
36	28-1/4	29-1/2	29-1/2		
42	30-1/4	29-1/2	29-1/2		7/8
48	30-1/4	29-1/2	29-1/2		
60	32-1/4	34	34		

All dimensions are in inches and are subject to change without notice.
Overall height is from bottom of basepan to top of fan guard.
Overall length and width include screw heads.

System Charge for Various Matched Systems

Outdoor Unit	TCGD18 S41S3(H)(E)	TCGD24 S41S3(H)(E)	TCGD30 S41S3(H)(E)	TCGD36 S41S3(H)(E)	TCGD42 S41S4(H)(E)	TCGD48 S41S3(H)(E)	TCGD60 S41S3(E)
Required Orifice or TXV [1,2]	0.048/4F1	0.055/4F1	0.061/4F1	0.065/4G1	0.073/4G1	0.073/4H1	0.087/4J1
Indoor Unit [3,4,5]	**Additional Charge, oz.**						
AHE18B	0	–	–	–	–	–	–
AHE24B	–	4	–	–	–	–	–
AHE30B	–	4	0	–	–	–	–
AHE36C	–	4	2	0	–	–	–
AHE42D	–	–	–	8	10	–	–
AHE48D	–	–	–	–	9	0	–
AHE60D	–	–	–	–	14	–	4
AHR18B	0	–	–	–	–	–	–
AHR24B	–	4	–	–	–	–	–
AHR30B	–	–	0	–	–	–	–
AHR36B	–	–	2	0	–	–	–
AHR42C	–	–	–	8	10	–	–
AHR48D	–	–	–	–	9	0	–
AHR60D	–	–	–	–	15	–	4
AHV18B	0	–	–	–	–	–	–
AHV24B	14	8	–	–	–	–	–
AHV30B	14	8	0	–	–	–	–
AHV36C	22	14	6	0	–	–	–
AHV42D	–	–	18	10	10	–	–
AHV48D	–	–	–	10	9	3	–
AHV60D	–	–	–	–	13	8	4
AV*24	TXV + 0	–	–	–	–	–	–
AV*36	–	4	2	0	–	–	–
AV*48	–	–	–	–	TXV + 10	0	–
AV*60	–	–	–	–	TXV + 10	0	0
FC/MC/PC18	0	–	–	–	–	–	–
FC/MC/PC32	–	4	0	–	–	–	–
FC/MC/PC35	–	4	0	–	–	–	–
FC/MC/PC36	–	0	–	–	–	–	–
FC/MC/PC37	–	4	2	0	–	–	–
FC/MC/PC43	–	4	2	0	0	–	–
FC/MC/PC48	–	–	–	8	10	4	–
FC/MC/PC60	–	–	–	–	9	0	0
FC/MC62	–	–	–	–	14	–	4
FC64	–	–	–	–	23	–	11
UC18	0	–	–	–	–	–	–
UC36	–	0	–	–	–	–	–
UC48	–	–	–	8	4	4	–
UC60	–	–	–	–	9	0	0

Some of the combinations shown in the above System Charge table require Advanced Main Air Circulating Fan indoor product. For approved coil only matches, please see the “COOLING CAPACITY - Upflow, Downflow & Horizontal Furnaces and Coils” table.

FOOTNOTES:

1. For applications requiring a TXV use S1-1TVM*** series kit.
2. Approved orifice(s) shipped with outdoor unit.
3. Systems matched with furnaces or air handlers not equipped with blower-off delays may require blower Time Delay Kit S1-2FD06700224.
4. PC coils cannot be used in downflow or horizontal applications. FC coils cannot be used in horizontal applications.
5. Refer to Cooling Performance Data tables for actual system performance for specified system matches.

PROCEDURES:

1. Unit factory charge listed on the unit nameplate includes refrigerant for the outdoor unit, the smallest matched indoor unit, and 15 feet of interconnecting line tubing.
2. Verify the TXV or orifice and additional charge required for specific matched indoor unit in the system using the above table.
3. Add additional charge for the amount of interconnecting line tubing greater than 15 feet at the rate specified in Physical and Electrical Data Table.
4. For indoor matches requiring additional charge, the refrigerant needs to be weighed in for specific matched indoor unit and lineset length.
5. Permanently mark the unit nameplate with the total system charge. Total System Charge = Base Charge (as shipped) + charge adder for matched indoor unit + charge adder for line set.

IMPORTANT

Models 12-48 require Hard Start Kits for TXV matches. Models with “H” on the end of the model number have factory installed Hard Start Kits. For models without an “H” refer to the Hard Start Kit Accessory Installation Manual for the Hard Start Kit part number for each model.

COOLING CAPACITY - With Air Handler Coils

UNIT MODEL	AIR HANDLER		COIL MODEL[1]	COOLING				
	MODEL	WIDTH		RATED CFM	NET MBH		SEER	EER
					TOTAL	SENS.		
13 SEER AC WITH AIR HANDLERS								
TCGD18S41S3(H)(E)	AHE18B	17.5	–	610	17.9	13.8	14.75	12.25
	AHR18B	17.5	–	665	17.8	13.8	13.00	11.00
	AHV18B	17.5	–	615	17.6	13.4	14.25	12.25
	AHV24B	17.5	–	580	17.8	13.5	14.50	12.50
	AHV30B	17.5	–	700	18.0	14.5	14.50	12.50
	AHV36C	21.0	–	670	18.2	14.5	15.00	12.75
	AV*24	17.5	–	610	18.0	13.5	14.50	12.00
	MV12B	17.5	FC/MC18B	600	17.5	13.3	14.00	12.50
	MX12B	17.5	FC/MC18B	585	17.9	13.5	14.75	12.50
TCGD24S41S3(H)(E)	AHE24B	17.5	–	795	24.4	17.4	14.50	12.00
	AHE30B	17.5	–	795	24.4	17.4	14.50	12.00
	AHE36C	21.0	–	855	25.2	18.5	15.00	12.50
	AHR24B	17.5	–	740	23.8	16.5	13.00	11.00
	AHV24B	17.5	–	710	24.0	16.5	14.00	12.00
	AHV30B	17.5	–	775	24.0	16.9	14.25	12.00
	AHV36C	21.0	–	760	24.0	17.0	14.50	12.25
	AV*36	21.0	–	725	24.0	17.4	14.00	12.00
	MV12B	17.5	FC/MC35B	800	24.0	17.4	14.00	12.00
	MV12B	17.5	FC/MC36B	800	24.0	17.4	14.00	12.00
	MV12B	17.5	FC/MC43B	800	24.0	17.3	14.00	12.00
	MX12B	17.5	FC/MC35B	815	24.8	17.4	15.00	12.50
	MX12B	17.5	FC/MC36B	745	24.2	16.9	14.75	12.25
	MX12B	17.5	FC/MC43B	735	24.6	17.1	14.75	12.50
TCGD30S41S3(H)(E)	AHE30B	17.5	–	985	29.4	21.4	14.00	11.75
	AHE36C	21.0	–	1000	30.2	22.0	14.75	12.25
	AHR30B	17.5	–	1095	29.4	22.2	13.00	11.00
	AHR36B	17.5	–	1060	29.8	22.0	13.00	11.00
	AHV30B	17.5	–	1000	29.0	21.3	13.50	11.50
	AHV36C	21.0	–	895	29.0	20.9	14.50	12.00
	AHV42D	24.5	–	1080	30.0	22.8	14.75	12.25
	AV*36	21.0	–	960	30.0	21.8	14.50	12.00
	MV12B	17.5	FC/MC35B	1000	29.0	21.6	14.00	12.00
	MV12B	17.5	FC/MC43B	1000	29.0	21.6	14.00	12.00
	MV16C	21.0	FC/MC35C	1000	30.0	21.6	14.00	12.00
	MV16C	21.0	FC/MC43C	1000	30.0	21.6	14.00	12.00
	MX12B	17.5	FC/MC35B	1085	30.0	22.6	14.25	12.00
	MX12B	17.5	FC/MC43B	1095	30.4	23.0	14.50	12.25
	MX16C	21.0	FC/MC35C	1035	30.0	22.2	14.75	12.50
	MX16C	21.0	FC/MC43C	970	30.2	21.8	15.00	12.50
TCGD36S41S3(H)(E)	AHE36C	21.0	–	1190	35.6	25.4	14.25	12.00
	AHE42D	24.5	–	1180	35.8	25.8	14.50	12.25
	AHR36B	17.5	–	1245	34.6	24.6	13.00	11.00
	AHR42C	21.0	–	1230	35.6	25.4	13.00	11.25
	AHV36C	21.0	–	1215	35.8	25.8	13.75	12.00
	AHV42D	24.5	–	1180	36.0	25.8	14.50	12.25
	AHV48D	24.5	–	1155	35.6	25.2	14.50	12.25
	AV*36	21.0	–	1190	35.0	25.2	14.00	12.00
	MV12B	17.5	FC/MC43B	1225	35.4	25.2	14.00	11.75
	MV12D	24.5	FC/MC48D	1135	35.0	25.4	14.00	12.00
	MV16C	21.0	FC/MC43C	1200	36.0	25.4	14.00	12.00
	MV16C	21.0	FC/MC48C	1200	36.0	25.4	14.00	12.00
	MV20D	24.5	FC/MC48D	1200	36.0	25.6	14.00	12.00
	MX12B	17.5	FC/MC43B	1220	35.4	25.2	13.75	11.75
	MX12D	24.5	FC/MC48D	1225	36.0	25.6	14.25	12.25
	MX16C	21.0	FC/MC43C	1140	35.4	25.0	14.50	12.25
	MX16C	21.0	FC/MC48C	1150	36.2	25.6	14.75	12.50

For Notes See Page 5.

COOLING CAPACITY - With Air Handler Coils (Continued)

UNIT MODEL	AIR HANDLER		COIL MODEL[1]	COOLING				
	MODEL	WIDTH		RATED CFM	NET MBH TOTAL	NET MBH SENS.	SEER	EER
13 SEER AC WITH AIR HANDLERS								
TCGD42S41S4(H)(E)	AHE42D	24.5	–	1385	42.0	30.6	14.25	12.00
	AHE48D	24.5	–	1385	42.0	30.4	14.00	12.00
	AHE60D	24.5	–	1390	42.0	31.0	14.50	12.00
	AHR42C	21.0	–	1485	42.0	30.8	13.00	11.00
	AHR48D	24.5	–	1320	41.0	28.8	13.00	11.00
	AHR60D	24.5	–	1350	42.0	30.2	13.00	11.00
	AHV42D	24.5	–	1385	42.0	30.2	13.75	11.75
	AHV48D	24.5	–	1300	41.5	29.1	14.00	12.00
	AHV60D	24.5	–	1340	42.0	30.2	14.00	12.00
	AV*48	24.5	–	1385	42.0	30.4	14.25	12.00
	AV*60	24.5	–	1360	42.0	30.4	14.25	12.00
	MV16C	21.0	FC/MC43C	1380	42.0	30.2	14.00	12.00
	MV16C	21.0	FC/MC48C	1400	42.0	30.4	13.75	11.75
	MV16C	21.0	FC60C	1400	42.0	30.0	13.75	11.50
	MV20D	24.5	FC/MC48D	1470	42.0	31.0	14.25	12.00
	MV20D	24.5	FC/MC60D	1400	42.0	30.2	14.00	11.75
	MV20D	24.5	FC/MC62D	1400	42.0	30.8	14.00	12.00
	MV20D	24.5	FC64D	1400	42.0	30.8	14.50	12.25
	MX16C	21.0	FC/MC43C	1365	42.0	30.2	14.25	12.00
	MX16C	21.0	FC/MC48C	1390	42.0	30.2	14.25	12.00
	MX16C	21.0	FC60C	1420	42.0	30.0	14.00	12.00
	MX20D	24.5	FC/MC48D	1415	42.0	30.2	14.25	12.00
	MX20D	24.5	FC/MC60D	1470	42.0	30.8	14.25	12.00
	MX20D	24.5	FC/MC62D	1470	42.0	31.6	14.50	12.25
	MX20D	24.5	FC64D	1470	42.0	31.6	14.75	12.50
TCGD48S41S3(H)(E)	AHE48D	24.5	–	1600	47.0	34.6	13.75	11.50
	AHR48D	24.5	–	1610	48.0	34.6	13.00	11.00
	AHV48D	24.5	–	1585	47.5	34.0	13.25	11.50
	AHV60D	24.5	–	1570	48.0	35.0	13.50	12.00
	AV*48	24.5	–	1625	48.0	35.0	13.50	12.00
	AV*60	24.5	–	1560	48.0	35.0	13.50	12.00
	MV16C	21.0	FC/MC48C	1600	48.0	35.0	13.50	12.00
	MV16C	21.0	FC60C	1625	47.5	34.6	13.50	11.50
	MV20D	24.5	FC/MC48D	1600	48.0	35.0	13.50	12.00
	MV20D	24.5	FC/MC60D	1600	48.0	35.0	13.50	12.00
	MX16C	21.0	FC/MC48C	1685	48.5	35.6	13.75	11.50
	MX20D	24.5	FC/MC48D	1525	48.0	34.2	14.00	11.75
	MX20D	24.5	FC/MC60D	1585	48.5	34.6	14.00	12.00
TCGD60S41S3(E)	AHE60D	24.5	–	1835	58.5	39.8	13.50	11.50
	AHR60D	24.5	–	1870	57.0	38.5	13.00	11.00
	AHV60D	24.5	–	1635	57.0	38.5	13.50	11.50
	AV*60	24.5	–	1730	58.0	39.0	13.50	11.00
	MV20D	24.5	FC/MC60D	1800	57.0	38.5	13.00	11.00
	MV20D	24.5	FC/MC62D	1800	57.0	38.5	13.00	11.00
	MV20D	24.5	FC64D	1855	57.0	39.0	13.75	11.50
	MX20D	24.5	FC/MC60D	1780	57.5	38.8	13.75	11.50
	MX20D	24.5	FC/MC62D	1795	58.0	38.8	14.00	11.75
	MX20D	24.5	FC64D	1795	58.5	39.8	14.50	12.00

Rated in accordance with DOE test procedures (Federal Register 12-27-79 and 3-18-88) and ANSI/AHRI Standard 210/240.
Cooling MBH based on 80°F entering air temperature, 50% RH (Relative Humidity), and rated air flow.
EER (Energy Efficiency Ratio) is the total cooling output in BTUs at 95°F outdoor ambient divided by the total electric power in watt-hours at those conditions.
SEER (Seasonal Energy Efficiency Ratio) is the total cooling output in BTUs during a normal annual usage period for cooling divided by the total electric power input in watt-hours during the same period.

1. MC coils available with a factory installed horizontal drain pan. See price pages for specific model number.

— = Not applicable.

MA Modular Air Handlers use Coil Only Ratings

COOLING CAPACITY - Upflow, Downflow & Horizontal Furnaces and Coils (Coil Only Ratings)

UNIT MODEL	COIL		CFM RANGE (MIN.-MAX.)	COOLING				
	MODEL	WIDTH		RATED CFM	NET MBH		SEER [1]	EER
					TOTAL	SENS.		
13 SEER AC COIL ONLY RATINGS								
TCGD18S41S3(H)(E)	FC/MC/PC18	14.5,17.5	450-750	600	17.5	12.9	13.00	11.00
	UC18	14.5,17.5	450-750	600	17.5	12.9	13.00	11.00
TCGD24S41S3(H)(E)	FC/MC/PC32	14.5	600-1000	800	24.0	16.7	13.00	11.00
	FC/MC/PC35	17.5,21.0	600-1000	800	24.0	16.7	13.00	11.00
	FC/MC/PC36	14.5,17.5,21.0	600-1000	800	24.0	16.7	13.00	11.00
	FC/MC/PC37	14.5	600-1000	800	24.0	16.7	13.00	11.00
	FC/MC/PC43	17.5,21.0	600-1000	800	24.0	16.7	13.00	11.00
	UC36	14.5,17.5,21.0	600-1000	800	24.0	16.7	13.00	11.00
TCGD30S41S3(H)(E)	FC/MC/PC32	14.5	800-1200	1000	29.0	21.0	13.00	11.00
	FC/MC/PC35	17.5,21.0	800-1200	1000	29.0	21.0	13.00	11.00
	FC/MC/PC37	14.5	800-1200	1000	29.0	21.0	13.00	11.00
	FC/MC/PC43	17.5,21.0	800-1200	1000	29.0	21.0	13.00	11.00
TCGD36S41S3(H)(E)	FC/MC/PC37	14.5	1000-1400	1200	35.0	24.8	13.00	11.00
	FC/MC/PC43	17.5,21.0	1000-1400	1200	35.0	24.8	13.00	11.00
	FC/MC/PC48	21.0,24.5	1000-1400	1200	35.0	24.8	13.00	11.00
	UC48	21.0,24.5	1000-1400	1200	35.0	24.8	13.00	11.00
TCGD42S41S4(H)(E)	FC/MC/PC43	17.5,21.0	1200-1600	1400	41.5	29.8	13.00	11.00
	FC/MC/PC48	21.0,24.5	1200-1600	1400	42.0	30.0	13.00	11.00
	FC/MC/PC60	21.0,24.5	1200-1600	1400	41.5	29.6	13.00	11.00
	FC/MC62	24.5	1200-1600	1400	42.0	30.4	13.00	11.00
	FC64	24.5	1200-1600	1400	42.0	30.8	13.25	11.25
	UC48	21.0,24.5	1200-1600	1400	42.0	30.0	13.00	11.00
TCGD48S41S3(H)(E)	FC/MC/PC48	21.0,24.5	1400-1800	1600	48.0	34.4	13.00	11.00
	FC/MC/PC60	21.0,24.5	1400-1800	1600	48.0	34.4	13.00	11.00
	UC48	21.0,24.5	1400-1800	1600	48.0	34.4	13.00	11.00
	UC60	21.0,24.5	1400-1800	1600	48.0	34.4	13.00	11.00
TCGD60S41S3(E)	FC/MC/PC60	21.0,24.5	1600-2000	1800	57.0	38.5	13.00	11.00
	FC/MC62	24.5	1600-2000	1800	57.0	38.5	13.00	11.00
	FC64	24.5	1600-2000	1800	57.0	39.0	13.50	11.25
	UC60	21.0,24.5	1600-2000	1800	57.0	38.5	13.00	11.00

1. Requires a S1-2FD06700224 Blower Time Delay unless a standard furnace is equipped with one.

MA Modular Air Handlers use Coil Only Ratings.

PSC furnaces, such as the TG8S, TGLS, and TG9S, use Coil Only Ratings.

COOLING CAPACITY - With High Efficiency Motor Furnaces

UNIT MODEL	FURNACE		COIL MODEL[1]	COOLING				
	MODEL	WIDTH		RATED CFM	NET MBH		SEER	EER
					TOTAL	SENS.		
13 SEER AC WITH HIGH EFFICIENCY MOTOR FURNACES[2]								
TCGD18S41S3(H)(E)	T*(8,L)V*A12	14.5	FC/MC/PC18A	620	17.5	12.7	14.50	12.50
	T*(8,L)V*A12	14.5	UC18A	620	17.5	12.7	14.50	12.00
	T*(8,L)V*B12	17.5	FC/MC/PC18B	580	17.5	12.6	14.50	12.00
	T*(8,L)V*B12	17.5	UC18B	580	17.5	12.5	14.50	12.00
	T*(8,L)X*A12	14.5	FC/MC/PC18A	540	17.7	12.9	14.50	12.50
	T*(8,L)X*A12	14.5	UC18A	590	17.7	13.4	14.50	12.00
	T*(8,L)X*B12	17.5	FC/MC/PC18B	580	18.0	13.4	14.50	12.50
	T*(8,L)X*B12	17.5	UC18B	595	18.0	13.4	14.50	12.00
	T*9V*A10	14.5	FC/MC/PC18A	580	18.0	13.3	14.00	12.50
	T*9(C,V)*B12	17.5	FC/MC/PC18B	610	17.5	12.8	14.50	12.50
	T*9(C,V)*B12	17.5	UC18B	610	17.5	12.6	14.50	12.50
	T*9X*A10	14.5	FC/MC/PC18A	575	17.7	12.9	14.25	12.00
	T*9X*B12	17.5	FC/MC/PC18B	590	18.0	13.4	14.50	12.50
	T*9X*B12	17.5	UC18B	590	18.0	13.4	14.50	12.00
	Y*(8,L)C*A12	14.5	FC/MC/PC18A	620	17.5	12.7	14.50	12.50
	Y*(8,L)C*A12	14.5	UC18A	620	17.5	12.7	14.50	12.00
	Y*(8,L)C*B12	17.5	FC/MC/PC18B	580	17.5	12.6	14.50	12.00
	Y*(8,L)C*B12	17.5	UC18B	580	17.5	12.5	14.50	12.00
	Y*9C*B12	17.5	FC/MC/PC18B	610	17.5	12.8	14.50	12.50
	Y*9C*B12	17.5	UC18B	610	17.5	12.6	14.50	12.50
TCGD24S41S3(H)(E)	T*(8,L)V*A12	14.5	FC/MC/PC32A	775	24.0	17.0	14.00	11.50
	T*(8,L)V*A12	14.5	FC/MC/PC36A	805	24.0	16.9	14.00	12.00
	T*(8,L)V*A12	14.5	FC/MC/PC37A	805	24.0	17.0	14.00	12.00
	T*(8,L)V*A12	14.5	UC36A	805	23.6	16.6	13.80	11.50
	T*(8,L)V*B12	17.5	FC/MC/PC35B	760	24.0	16.8	14.00	12.00
	T*(8,L)V*B12	17.5	FC/MC/PC36B	765	24.0	17.0	14.00	12.00
	T*(8,L)V*B12	17.5	FC/MC/PC43B	760	24.0	16.9	14.00	12.00
	T*(8,L)V*B12	17.5	UC36B	765	23.6	16.7	14.00	11.50
	T*(8,L)X*A12	14.5	FC/MC/PC32A	800	24.0	16.9	14.00	11.50
	T*(8,L)X*A12	14.5	FC/MC/PC36A	815	24.0	16.8	14.00	12.00
	T*(8,L)X*A12	14.5	FC/MC/PC37A	840	24.0	17.0	14.00	12.00
	T*(8,L)X*B12	17.5	FC/MC/PC35B	850	24.0	17.0	14.00	12.00
	T*(8,L)X*B12	17.5	FC/MC/PC36B	835	24.0	16.8	14.00	12.00
	T*(8,L)X*B12	17.5	FC/MC/PC43B	865	24.0	17.0	14.00	12.00
	T*9V*A10	14.5	FC/MC/PC32A	785	24.2	16.9	13.75	11.50
	T*9V*A10	14.5	FC/MC/PC36A	790	24.0	16.8	13.50	11.50
	T*9V*A10	14.5	FC/MC/PC37A	790	24.6	17.2	13.75	11.75
	T*9(C,V)*B12	17.5	FC/MC/PC35B	815	24.0	17.1	14.00	12.00
	T*9(C,V)*B12	17.5	FC/MC/PC36B	815	24.0	16.9	14.00	12.00
	T*9(C,V)*B12	17.5	FC/MC/PC43B	800	24.0	17.0	14.00	12.00
	T*9(C,V)*B12	17.5	UC36B	815	23.6	16.7	13.80	11.50
	T*9X*A10	14.5	FC/MC/PC32A	745	24.0	16.8	13.75	11.75
	T*9X*A10	14.5	FC/MC/PC36A	760	24.2	16.9	13.75	11.75
	T*9X*A10	14.5	FC/MC/PC37A	740	24.4	17.1	14.00	11.75
	T*9X*B12	17.5	FC/MC/PC36B	775	24.0	16.8	14.00	12.00
	T*9X*C16	21.0	FC/MC/PC35C	715	23.8	16.3	14.00	12.00
	T*9X*C16	21.0	FC/MC/PC36C	770	24.0	16.8	14.00	12.00
	T*9X*C20	21.0	FC/MC/PC35C	825	24.0	17.0	14.00	12.00
	T*9X*C20	21.0	FC/MC/PC36C	810	24.0	16.8	14.00	12.00
	Y*(8,L)C*A12	14.5	FC/MC/PC32A	775	24.0	17.0	14.00	11.50
	Y*(8,L)C*A12	14.5	FC/MC/PC36A	805	24.0	16.9	14.00	12.00

For notes see Page 13.

COOLING CAPACITY - With High Efficiency Motor Furnaces (Continued)

UNIT MODEL	FURNACE		COIL MODEL[1]	COOLING				
	MODEL	WIDTH		RATED CFM	NET MBH		SEER	EER
					TOTAL	SENS.		
13 SEER AC WITH HIGH EFFICIENCY MOTOR FURNACES[2]								
TCGD24S41S3(H)(E)	Y*(8,L)C*A12	14.5	FC/MC/PC37A	805	24.0	17.0	14.00	12.00
	Y*(8,L)C*A12	14.5	UC36A	805	23.6	16.6	13.80	11.50
	Y*(8,L)C*B12	17.5	FC/MC/PC35B	760	24.0	16.8	14.00	12.00
	Y*(8,L)C*B12	17.5	FC/MC/PC36B	765	24.0	17.0	14.00	12.00
	Y*(8,L)C*B12	17.5	FC/MC/PC43B	760	24.0	16.9	14.00	12.00
	Y*(8,L)C*B12	17.5	UC36B	765	23.6	16.7	14.00	11.50
	Y*9C*B12	17.5	FC/MC/PC35B	815	24.0	17.1	14.00	12.00
	Y*9C*B12	17.5	FC/MC/PC36B	815	24.0	16.9	14.00	12.00
	Y*9C*B12	17.5	FC/MC/PC43B	800	24.0	17.0	14.00	12.00
	Y*9C*B12	17.5	UC36B	815	23.6	16.7	13.80	11.50
TCGD30S41S3(H)(E)	T*(8,L)V*A12	14.5	FC/MC/PC32A	1045	29.2	21.8	13.20	11.00
	T*(8,L)V*A12	14.5	FC/MC/PC37A	980	29.8	21.8	13.80	11.50
	T*(8,L)V*B12	17.5	FC/MC/PC35B	995	29.6	21.4	14.00	11.50
	T*(8,L)V*B12	17.5	FC/MC/PC43B	990	30.0	22.0	14.00	12.00
	T*(8,L)V*C16	21.0	FC/MC/PC35C	1025	29.6	22.0	14.00	12.00
	T*(8,L)V*C16	21.0	FC/MC/PC43C	990	30.0	22.1	14.00	12.00
	T*(8,L)V*C20	21.0	FC/MC/PC35C	1080	30.0	22.4	14.00	12.00
	T*(8,L)V*C20	21.0	FC/MC/PC43C	1000	30.0	22.1	14.00	12.00
	T*(8,L)X*A12	14.5	FC/MC/PC32A	970	29.2	21.4	13.20	11.00
	T*(8,L)X*A12	14.5	FC/MC/PC37A	1105	30.0	22.9	13.80	11.50
	T*(8,L)X*B12	17.5	FC/MC/PC35B	1120	30.0	22.8	14.00	11.50
	T*(8,L)X*B12	17.5	FC/MC/PC43B	1125	30.0	22.9	14.00	12.00
	T*(8,L)X*C16	21.0	FC/MC/PC35C	1105	30.0	22.8	14.00	12.00
	T*(8,L)X*C16	21.0	FC/MC/PC43C	710	28.2	19.3	14.00	12.00
	T*(8,L)X*C20	21.0	FC/MC/PC35C	850	28.8	20.6	14.00	12.00
	T*(8,L)X*C20	21.0	FC/MC/PC43C	870	29.6	21.2	14.00	12.00
	T*9(C,V)*B12	17.5	FC/MC/PC35B	1045	29.4	22.0	13.50	11.50
	T*9(C,V)*B12	17.5	FC/MC/PC43B	1035	30.0	22.0	13.80	11.50
	T*9(C,V)*C16	21.0	FC/MC/PC35C	1005	29.6	22.0	14.00	12.00
	T*9(C,V)*C16	21.0	FC/MC/PC43C	1030	30.0	22.0	14.00	12.00
	T*9(C,V)*C20	21.0	FC/MC/PC35C	985	29.6	22.0	14.00	12.00
	T*9(C,V)*C20	21.0	FC/MC/PC43C	995	30.0	22.1	14.00	12.00
	T*9X*B12	17.5	FC/MC/PC35B	1085	29.8	22.8	14.00	12.00
	T*9X*B12	17.5	FC/MC/PC43B	1095	30.0	22.9	13.80	11.50
	T*9X*C16	21.0	FC/MC/PC35C	1075	29.8	22.4	14.00	12.00
	T*9X*C16	21.0	FC/MC/PC43C	1055	30.0	22.9	14.00	12.00
	T*9X*C20	21.0	FC/MC/PC43C	720	28.2	19.3	14.00	12.00
	Y*(8,L)C*A12	14.5	FC/MC/PC32A	1045	29.2	21.8	13.20	11.00
	Y*(8,L)C*A12	14.5	FC/MC/PC37A	980	29.8	21.8	13.80	11.50
	Y*(8,L)C*B12	17.5	FC/MC/PC35B	995	29.6	21.4	14.00	11.50
	Y*(8,L)C*B12	17.5	FC/MC/PC43B	990	30.0	22.0	14.00	12.00
	Y*(8,L)C*C16	21.0	FC/MC/PC35C	1025	29.6	22.0	14.00	12.00
	Y*(8,L)C*C16	21.0	FC/MC/PC43C	990	30.0	22.1	14.00	12.00
	Y*(8,L)C*C20	21.0	FC/MC/PC35C	1080	30.0	22.4	14.00	12.00
	Y*(8,L)C*C20	21.0	FC/MC/PC43C	1000	30.0	22.1	14.00	12.00
	Y*9C*B12	17.5	FC/MC/PC35B	1045	29.4	22.0	13.50	11.50
	Y*9C*B12	17.5	FC/MC/PC43B	1035	30.0	22.0	13.80	11.50
	Y*9C*C16	21.0	FC/MC/PC35C	1005	29.6	22.0	14.00	12.00
	Y*9C*C16	21.0	FC/MC/PC43C	1030	30.0	22.0	14.00	12.00
	Y*9C*C20	21.0	FC/MC/PC35C	985	29.6	22.0	14.00	12.00
	Y*9C*C20	21.0	FC/MC/PC43C	995	30.0	22.1	14.00	12.00

For notes see Page 13.

COOLING CAPACITY - With High Efficiency Motor Furnaces (Continued)

UNIT MODEL	FURNACE		COIL MODEL[1]	COOLING				
	MODEL	WIDTH		RATED CFM	NET MBH		SEER	EER
					TOTAL	SENS.		
13 SEER AC WITH HIGH EFFICIENCY MOTOR FURNACES[2]								
TCGD36S41S3(H)(E)	T*(8,L)V*A12	14.5	FC/MC/PC37A	980	33.8	23.0	13.50	11.00
	T*(8,L)V*B12	17.5	FC/MC/PC43B	1210	35.2	25.2	13.50	11.00
	T*(8,L)V*C16	21.0	FC/MC/PC43C	1205	35.6	25.4	14.00	11.50
	T*(8,L)V*C16	21.0	FC/MC/PC48C	1210	36.0	26.0	14.00	12.00
	T*(8,L)V*C16	21.0	UC48C	1210	34.6	24.8	13.50	11.50
	T*(8,L)V*C20	21.0	FC/MC/PC43C	1190	35.6	25.4	14.00	12.00
	T*(8,L)V*C20	21.0	FC/MC/PC48C	1155	36.0	26.1	14.00	12.00
	T*(8,L)V*C20	21.0	UC48C	1155	34.8	24.8	14.00	11.50
	T*(8,L)X*A12	14.5	FC/MC/PC37A	1290	35.2	25.4	13.30	11.25
	T*(8,L)X*B12	17.5	FC/MC/PC43B	1300	35.2	25.4	13.30	11.25
	T*(8,L)X*C16	21.0	FC/MC/PC43C	1175	35.2	24.8	14.00	11.50
	T*(8,L)X*C16	21.0	FC/MC/PC48C	1185	35.6	25.2	14.00	11.50
	T*(8,L)X*C16	21.0	UC48C	1185	34.2	24.8	13.50	11.50
	T*(8,L)X*C20	21.0	FC/MC/PC43C	1250	35.6	25.6	13.80	11.70
	T*(8,L)X*C20	21.0	FC/MC/PC48C	1270	35.8	25.8	14.00	11.50
	T*(8,L)X*C20	21.0	UC48C	1300	34.8	25.4	13.50	11.50
	T*9(C,V)*B12	17.5	FC/MC/PC43B	1200	35.2	25.2	13.50	11.00
	T*9(C,V)*C16	21.0	FC/MC/PC43C	1240	35.4	25.2	13.50	11.50
	T*9(C,V)*C16	21.0	FC/MC/PC48C	1195	36.0	26.0	14.00	11.50
	T*9(C,V)*C16	21.0	UC48C	1195	34.6	24.8	13.50	11.50
	T*9(C,V)*C20	21.0	FC/MC/PC43C	1200	35.6	25.4	14.00	11.50
	T*9(C,V)*C20	21.0	FC/MC/PC48C	1330	36.0	26.5	14.00	11.50
	T*9(C,V)*C20	21.0	UC48C	1305	35.0	25.6	13.30	11.00
	T*9(C,V)*D20	24.5	FC/MC/PC48D	1240	36.0	26.2	14.00	12.00
	T*9(C,V)*D20	24.5	UC48D	1240	34.8	25.0	13.80	11.50
	T*9X*B12	17.5	FC/MC/PC43B	1270	35.2	25.4	13.25	11.25
	T*9X*C16	21.0	FC/MC/PC43C	1260	35.4	25.4	13.45	11.40
	T*9X*C16	21.0	FC/MC/PC48C	1280	35.8	25.8	13.70	11.50
	T*9X*C16	21.0	UC48C	1280	34.6	24.8	13.15	11.20
	T*9X*C20	21.0	FC/MC/PC43C	1185	35.0	24.6	13.55	11.40
	T*9X*C20	21.0	FC/MC/PC48C	1205	35.4	25.0	13.70	11.50
	T*9X*C20	21.0	UC48C	1205	34.0	24.6	13.25	11.20
	T*9X*D20	24.5	FC/MC/PC48D	1240	35.4	25.0	13.70	11.50
	T*9X*D20	24.5	UC48D	1240	34.0	24.6	13.30	11.25
	Y*(8,L)C*A12	14.5	FC/MC/PC37A	980	33.8	23.0	13.50	11.00
	Y*(8,L)C*B12	17.5	FC/MC/PC43B	1210	35.2	25.2	13.50	11.00
	Y*(8,L)C*C16	21.0	FC/MC/PC43C	1205	35.6	25.4	14.00	11.50
	Y*(8,L)C*C16	21.0	FC/MC/PC48C	1210	36.0	26.0	14.00	12.00
	Y*(8,L)C*C16	21.0	UC48C	1210	34.6	24.8	13.50	11.50
	Y*(8,L)C*C20	21.0	FC/MC/PC43C	1190	35.6	25.4	14.00	12.00
	Y*(8,L)C*C20	21.0	FC/MC/PC48C	1155	36.0	26.1	14.00	12.00
	Y*(8,L)C*C20	21.0	UC48C	1155	34.8	24.8	14.00	11.50
	Y*9C*B12	17.5	FC/MC/PC43B	1200	35.2	25.2	13.50	11.00
	Y*9C*C16	21.0	FC/MC/PC43C	1240	35.4	25.2	13.50	11.50
	Y*9C*C16	21.0	FC/MC/PC48C	1195	36.0	26.0	14.00	11.50
	Y*9C*C16	21.0	UC48C	1195	34.6	24.8	13.50	11.50
	Y*9C*C20	21.0	FC/MC/PC43C	1200	35.6	25.4	14.00	11.50
	Y*9C*C20	21.0	FC/MC/PC48C	1330	36.0	26.5	14.00	11.50
	Y*9C*C20	21.0	UC48C	1305	35.0	25.6	13.30	11.00
	Y*9C*D20	24.5	FC/MC/PC48D	1240	36.0	26.2	14.00	12.00
	Y*9C*D20	24.5	UC48D	1240	34.8	25.0	13.80	11.50

For notes see Page 13.

COOLING CAPACITY - With High Efficiency Motor Furnaces (Continued)

UNIT MODEL	FURNACE		COIL MODEL[1]	COOLING				
	MODEL	WIDTH		RATED CFM	NET MBH		SEER	EER
					TOTAL	SENS.		
13 SEER AC WITH HIGH EFFICIENCY MOTOR FURNACES[2]								
TCGD42S41S4(H)(E)	T*(8,L)V*B12	17.5	FC/MC/PC43B	1270	41.0	28.8	13.25	11.25
	T*(8,L)V*C16	21.0	FC/MC/PC43C	1390	42.0	30.2	13.50	11.50
	T*(8,L)V*C16	21.0	FC/MC/PC48C	1330	42.0	29.8	13.50	11.50
	T*(8,L)V*C16	21.0	FC/MC/PC48D	1330	42.0	29.8	13.50	11.50
	T*(8,L)V*C16	21.0	FC/MC/PC60D	1420	42.0	30.0	13.50	11.50
	T*(8,L)V*C16	21.0	FC/MC62D	1420	42.0	30.6	13.50	11.50
	T*(8,L)V*C16	21.0	FC/PC60C	1420	42.0	30.0	13.50	11.50
	T*(8,L)V*C16	21.0	FC64D	1420	42.0	30.8	14.25	12.00
	T*(8,L)V*C16	21.0	UC48C	1435	42.0	30.2	13.50	11.50
	T*(8,L)V*C16	21.0	UC60C	1420	42.0	30.0	13.50	11.50
	T*(8,L)V*C20	21.0	FC/MC/PC43C	1450	42.0	30.6	13.25	11.25
	T*(8,L)V*C20	21.0	FC/MC/PC48C	1410	42.0	30.2	13.75	11.50
	T*(8,L)V*C20	21.0	FC/MC/PC48D	1410	42.0	30.2	13.75	11.50
	T*(8,L)V*C20	21.0	FC/MC/PC60D	1340	42.0	30.2	13.75	11.75
	T*(8,L)V*C20	21.0	FC/MC62D	1365	42.0	30.8	14.00	11.75
	T*(8,L)V*C20	21.0	FC/PC60C	1340	42.0	30.2	13.75	11.75
	T*(8,L)V*C20	21.0	FC64D	1410	42.0	30.8	14.25	12.00
	T*(8,L)V*C20	21.0	UC48C	1410	42.0	30.2	13.75	11.75
	T*(8,L)V*C20	21.0	UC60C	1410	42.0	30.0	13.50	11.50
	T*(8,L)X*B12	17.5	FC/MC/PC43B	1300	41.5	29.4	13.75	11.50
	T*(8,L)X*C16	21.0	FC/MC/PC43C	1475	42.0	31.0	14.00	11.75
	T*(8,L)X*C16	21.0	FC/MC/PC48C	1360	42.0	30.2	14.25	12.00
	T*(8,L)X*C16	21.0	FC/MC/PC48D	1360	42.0	30.2	14.25	12.00
	T*(8,L)X*C16	21.0	FC/MC/PC60D	1360	42.0	30.0	14.00	12.00
	T*(8,L)X*C16	21.0	FC/MC62D	1360	42.0	30.8	14.25	12.00
	T*(8,L)X*C16	21.0	FC/PC60C	1360	42.0	30.0	14.00	12.00
	T*(8,L)X*C16	21.0	FC64D	1360	42.0	31.0	14.50	12.25
	T*(8,L)X*C16	21.0	UC48C	1400	42.0	30.2	14.00	12.00
	T*(8,L)X*C16	21.0	UC60C	1400	42.0	30.2	13.75	12.00
	T*(8,L)X*C20	21.0	FC/MC/PC43C	1415	42.0	30.4	14.00	11.75
	T*(8,L)X*C20	21.0	FC/MC/PC48C	1475	42.0	31.0	14.25	12.00
	T*(8,L)X*C20	21.0	FC/MC/PC48D	1475	42.0	31.0	14.25	12.00
	T*(8,L)X*C20	21.0	FC/MC/PC60D	1485	42.0	31.0	14.00	12.00
	T*(8,L)X*C20	21.0	FC/MC62D	1485	42.0	31.6	14.25	12.00
	T*(8,L)X*C20	21.0	FC/PC60C	1485	42.0	31.0	14.00	12.00
	T*(8,L)X*C20	21.0	FC64D	1485	42.0	31.8	14.50	12.25
	T*(8,L)X*C20	21.0	UC48C	1475	42.0	31.0	14.00	12.00
	T*(8,L)X*C20	21.0	UC60C	1485	42.0	31.0	13.75	11.75
	T*9(C,V)*C16	21.0	FC/MC/PC43C	1360	42.0	30.0	13.25	11.25
	T*9(C,V)*C16	21.0	FC/MC/PC48C	1395	42.0	30.4	13.50	11.50
	T*9(C,V)*C16	21.0	FC/MC/PC48D	1395	42.0	30.4	13.50	11.50
	T*9(C,V)*C16	21.0	FC/MC/PC60D	1445	41.5	29.8	13.00	11.00
	T*9(C,V)*C16	21.0	FC/MC62D	1445	42.0	30.6	13.25	11.00
	T*9(C,V)*C16	21.0	FC/PC60C	1445	41.5	29.8	13.00	11.00
	T*9(C,V)*C16	21.0	FC64D	1445	42.0	30.8	13.50	11.50
	T*9(C,V)*C16	21.0	UC48C	1395	42.0	30.2	13.50	11.50
	T*9(C,V)*C16	21.0	UC60C	1445	41.5	29.6	13.00	11.00
	T*9(C,V)*C20	21.0	FC/MC/PC43C	1395	42.0	30.0	13.25	11.25
	T*9(C,V)*C20	21.0	FC/MC/PC48C	1430	42.0	30.4	13.25	11.25
	T*9(C,V)*C20	21.0	FC/MC/PC48D	1430	42.0	30.4	13.25	11.25
	T*9(C,V)*C20	21.0	FC/MC/PC60D	1445	42.0	29.8	13.25	11.25
	T*9(C,V)*C20	21.0	FC/MC62D	1445	42.0	30.6	13.50	11.25

For notes see Page 13.

COOLING CAPACITY - With High Efficiency Motor Furnaces (Continued)

UNIT MODEL	FURNACE		COIL MODEL[1]	COOLING				
	MODEL	WIDTH		RATED CFM	NET MBH		SEER	EER
					TOTAL	SENS.		
13 SEER AC WITH HIGH EFFICIENCY MOTOR FURNACES[2]								
TCGD42S41S4(H)(E)	T*9(C,V)*C20	21.0	FC/PC60C	1445	42.0	29.8	13.25	11.25
	T*9(C,V)*C20	21.0	FC64D	1445	42.0	30.8	13.75	11.75
	T*9(C,V)*C20	21.0	UC48C	1430	42.0	30.2	13.25	11.25
	T*9(C,V)*C20	21.0	UC60C	1445	41.5	29.8	13.00	11.25
	T*9(C,V)*D20	24.5	FC/MC/PC48D	1450	42.0	30.2	13.50	11.50
	T*9(C,V)*D20	24.5	FC/MC/PC60D	1445	42.0	30.0	13.50	11.50
	T*9(C,V)*D20	24.5	FC/MC62D	1455	42.0	30.6	13.50	11.50
	T*9(C,V)*D20	24.5	FC64D	1455	42.0	30.6	14.00	11.75
	T*9(C,V)*D20	24.5	UC48D	1450	42.0	30.2	13.50	11.50
	T*9(C,V)*D20	24.5	UC60D	1445	41.5	29.8	13.25	11.25
	T*9X*B12	17.5	FC/MC/PC43B	1270	41.5	29.0	13.50	11.50
	T*9X*C16	21.0	FC/MC/PC43C	1410	42.0	30.2	13.75	11.50
	T*9X*C16	21.0	FC/MC/PC48C	1425	42.0	30.4	13.75	11.75
	T*9X*C16	21.0	FC/MC/PC48D	1425	42.0	30.4	13.75	11.75
	T*9X*C16	21.0	FC/MC/PC60D	1460	42.0	30.0	13.75	11.50
	T*9X*C16	21.0	FC/MC62D	1460	42.0	30.6	13.75	11.75
	T*9X*C16	21.0	FC/PC60C	1460	42.0	30.0	13.75	11.50
	T*9X*C16	21.0	FC64D	1460	42.0	30.8	14.25	12.00
	T*9X*C16	21.0	UC48C	1425	42.0	30.4	13.75	11.75
	T*9X*C16	21.0	UC60C	1460	42.0	30.0	13.50	11.50
	T*9X*C20	21.0	FC/MC/PC43C	1400	42.0	30.4	14.00	11.75
	T*9X*C20	21.0	FC/MC/PC48C	1420	42.0	30.4	14.00	11.75
	T*9X*C20	21.0	FC/MC/PC48D	1420	42.0	30.4	14.00	11.75
	T*9X*C20	21.0	FC/MC/PC60D	1460	42.0	30.2	13.75	11.75
	T*9X*C20	21.0	FC/MC62D	1460	42.0	30.8	14.00	11.75
	T*9X*C20	21.0	FC/PC60C	1460	42.0	30.2	13.75	11.75
	T*9X*C20	21.0	FC64D	1460	42.0	30.8	14.50	12.25
	T*9X*C20	21.0	UC48C	1420	42.0	30.4	14.00	11.75
	T*9X*C20	21.0	UC60C	1460	42.0	30.0	13.75	11.75
	T*9X*D20	24.5	FC/MC/PC48D	1435	42.0	30.4	14.00	12.00
	T*9X*D20	24.5	FC/MC/PC60D	1515	42.0	31.0	14.00	12.00
	T*9X*D20	24.5	FC/MC62D	1425	42.0	30.8	14.00	12.00
	T*9X*D20	24.5	FC64D	1425	42.0	30.8	14.50	12.25
	T*9X*D20	24.5	UC48D	1435	42.0	30.0	14.00	12.00
	T*9X*D20	24.5	UC60D	1515	42.0	31.4	13.75	12.00
	Y*(8,L)C*B12	17.5	FC/MC/PC43B	1270	41.0	28.8	13.25	11.25
	Y*(8,L)C*C16	21.0	FC/MC/PC43C	1390	42.0	30.2	13.50	11.50
	Y*(8,L)C*C16	21.0	FC/MC/PC48C	1330	42.0	29.8	13.50	11.50
	Y*(8,L)C*C16	21.0	FC/MC/PC48D	1330	42.0	29.8	13.50	11.50
	Y*(8,L)C*C16	21.0	FC/MC/PC60D	1420	42.0	30.0	13.50	11.50
	Y*(8,L)C*C16	21.0	FC/MC62D	1420	42.0	30.6	13.50	11.50
	Y*(8,L)C*C16	21.0	FC/PC60C	1420	42.0	30.0	13.50	11.50
	Y*(8,L)C*C16	21.0	FC64D	1420	42.0	30.8	14.25	12.00
	Y*(8,L)C*C16	21.0	UC48C	1435	42.0	30.2	13.50	11.50
	Y*(8,L)C*C16	21.0	UC60C	1420	42.0	30.0	13.50	11.50
	Y*(8,L)C*C20	21.0	FC/MC/PC43C	1450	42.0	30.6	13.25	11.25
	Y*(8,L)C*C20	21.0	FC/MC/PC48C	1410	42.0	30.2	13.75	11.50
	Y*(8,L)C*C20	21.0	FC/MC/PC48D	1410	42.0	30.2	13.75	11.50
	Y*(8,L)C*C20	21.0	FC/MC/PC60D	1340	42.0	30.2	13.75	11.75
	Y*(8,L)C*C20	21.0	FC/MC62D	1365	42.0	30.8	14.00	11.75
	Y*(8,L)C*C20	21.0	FC/PC60C	1340	42.0	30.2	13.75	11.75

For notes see Page 13.

COOLING CAPACITY - With High Efficiency Motor Furnaces (Continued)

UNIT MODEL	FURNACE		COIL MODEL[1]	COOLING				
	MODEL	WIDTH		RATED CFM	NET MBH		SEER	EER
					TOTAL	SENS.		
13 SEER AC WITH HIGH EFFICIENCY MOTOR FURNACES[2]								
TCGD42S41S4(H)(E)	Y*(8,L)C*C20	21.0	FC64D	1410	42.0	30.8	14.25	12.00
	Y*(8,L)C*C20	21.0	UC48C	1410	42.0	30.2	13.75	11.75
	Y*(8,L)C*C20	21.0	UC60C	1410	42.0	30.0	13.50	11.50
	Y*9C*C16	21.0	FC/MC/PC43C	1360	42.0	30.0	13.25	11.25
	Y*9C*C16	21.0	FC/MC/PC48C	1395	42.0	30.4	13.50	11.50
	Y*9C*C16	21.0	FC/MC/PC48D	1395	42.0	30.4	13.50	11.50
	Y*9C*C16	21.0	FC/MC/PC60D	1445	41.5	29.8	13.00	11.00
	Y*9C*C16	21.0	FC/MC62D	1445	42.0	30.6	13.25	11.00
	Y*9C*C16	21.0	FC/PC60C	1445	41.5	29.8	13.00	11.00
	Y*9C*C16	21.0	FC64D	1445	42.0	30.8	13.50	11.50
	Y*9C*C16	21.0	UC48C	1395	42.0	30.2	13.50	11.50
	Y*9C*C16	21.0	UC60C	1445	41.5	29.6	13.00	11.00
	Y*9C*C20	21.0	FC/MC/PC43C	1395	42.0	30.0	13.25	11.25
	Y*9C*C20	21.0	FC/MC/PC48C	1430	42.0	30.4	13.25	11.25
	Y*9C*C20	21.0	FC/MC/PC48D	1430	42.0	30.4	13.25	11.25
	Y*9C*C20	21.0	FC/MC/PC60D	1445	42.0	29.8	13.25	11.25
	Y*9C*C20	21.0	FC/MC62D	1445	42.0	30.6	13.50	11.25
	Y*9C*C20	21.0	FC/PC60C	1445	42.0	29.8	13.25	11.25
	Y*9C*C20	21.0	FC64D	1445	42.0	30.8	13.75	11.75
	Y*9C*C20	21.0	UC48C	1430	42.0	30.2	13.25	11.25
	Y*9C*C20	21.0	UC60C	1445	41.5	29.8	13.00	11.25
	Y*9C*D20	24.5	FC/MC/PC48D	1450	42.0	30.2	13.50	11.50
	Y*9C*D20	24.5	FC/MC/PC60D	1445	42.0	30.0	13.50	11.50
	Y*9C*D20	24.5	FC/MC62D	1455	42.0	30.6	13.50	11.50
	Y*9C*D20	24.5	FC64D	1455	42.0	30.6	14.00	11.75
	Y*9C*D20	24.5	UC48D	1450	42.0	30.2	13.50	11.50
	Y*9C*D20	24.5	UC60D	1445	41.5	29.8	13.25	11.25
TCGD48S41S3(H)(E)	T*(8,L)V*C16	21.0	FC/MC/PC48C	1565	48.0	35.0	13.30	11.00
	T*(8,L)V*C16	21.0	FC/PC60C	1600	48.0	35.0	13.30	11.00
	T*(8,L)V*C20	21.0	FC/MC/PC48C	1640	48.0	35.0	13.20	11.00
	T*(8,L)V*C20	21.0	FC/PC60C	1625	48.0	35.0	13.50	11.50
	T*(8,L)X*C16	21.0	FC/MC/PC48C	1600	48.0	34.4	13.30	11.00
	T*(8,L)X*C16	21.0	FC/PC60C	1605	48.0	34.6	13.30	11.00
	T*(8,L)X*C20	21.0	FC/MC/PC48C	1660	48.0	34.4	13.20	11.00
	T*(8,L)X*C20	21.0	FC/MC/PC60D	1595	48.0	34.8	13.30	11.00
	T*9(C,V)*C16	21.0	FC/MC/PC48C	1590	48.0	34.6	13.10	11.00
	T*9(C,V)*C16	21.0	FC/PC60C	1590	48.0	35.2	13.10	11.00
	T*9(C,V)*C20	21.0	FC/MC/PC48C	1655	48.0	34.8	13.20	11.00
	T*9(C,V)*C20	21.0	FC/PC60C	1655	48.0	35.2	13.10	11.00
	T*9(C,V)*D20	24.5	FC/MC/PC48D	1645	48.0	35.2	13.20	11.00
	T*9(C,V)*D20	24.5	FC/MC/PC60D	1615	48.0	35.0	13.20	11.00
	T*9X*C16	21.0	FC/MC/PC48C	1565	48.0	34.8	13.10	11.00
	T*9X*C16	21.0	FC/PC60C	1575	47.0	34.6	13.10	11.00
	T*9X*C16	21.0	UC60C	1575	47.0	34.6	13.10	11.00
	T*9X*C20	21.0	FC/MC/PC48C	1615	48.0	34.4	13.20	11.00
	T*9X*C20	21.0	FC/PC60C	1625	47.0	34.6	13.10	11.00
	T*9X*C20	21.0	UC60C	1625	47.0	34.6	13.10	11.00
	T*9X*D20	24.5	FC/MC/PC48D	1635	48.0	34.8	13.20	11.00
	T*9X*D20	24.5	FC/MC/PC60D	1490	47.5	33.8	13.20	11.00
	Y*(8,L)C*C16	21.0	FC/MC/PC48C	1565	48.0	35.0	13.30	11.00
	Y*(8,L)C*C16	21.0	FC/PC60C	1600	48.0	35.0	13.30	11.00
	Y*(8,L)C*C20	21.0	FC/MC/PC48C	1640	48.0	35.0	13.20	11.00

For notes see Page 13.

COOLING CAPACITY - With High Efficiency Motor Furnaces (Continued)

UNIT MODEL	FURNACE		COIL MODEL[1]	COOLING				
	MODEL	WIDTH		RATED CFM	NET MBH		SEER	EER
					TOTAL	SENS.		
13 SEER AC WITH HIGH EFFICIENCY MOTOR FURNACES[2]								
TCGD48S41S3(H)(E)	Y*(8,L)C*C20	21.0	FC/PC60C	1625	48.0	35.0	13.50	11.50
	Y*9C*C16	21.0	FC/MC/PC48C	1590	48.0	34.6	13.10	11.00
	Y*9C*C16	21.0	FC/PC60C	1590	48.0	35.2	13.10	11.00
	Y*9C*C20	21.0	FC/MC/PC48C	1655	48.0	34.8	13.20	11.00
	Y*9C*C20	21.0	FC/PC60C	1655	48.0	35.2	13.10	11.00
	Y*9C*D20	24.5	FC/MC/PC48D	1645	48.0	35.2	13.20	11.00
	Y*9C*D20	24.5	FC/MC/PC60D	1615	48.0	35.0	13.20	11.00
TCGD60S41S3(E)	T*(8,L)V*C20	21.0	FC/MC62D	1615	56.5	37.4	13.50	11.00
	T*(8,L)V*C20	21.0	FC/PC60C	1605	55.5	37.0	13.50	11.00
	T*(8,L)V*C20	21.0	FC64D	1615	57.0	37.8	14.00	11.75
	T*(8,L)V*C20	21.0	UC60C	1605	54.0	35.2	13.00	11.00
	T*(8,L)X*C16	21.0	FC/PC60C	1605	56.5	37.8	13.50	11.00
	T*(8,L)X*C16	21.0	UC60C	1640	56.0	37.2	13.00	11.00
	T*(8,L)X*C20	21.0	FC/MC/PC60D	1690	57.0	37.8	13.50	11.00
	T*(8,L)X*C20	21.0	FC/MC62D	1665	57.0	37.8	13.50	11.00
	T*(8,L)X*C20	21.0	FC64D	1665	57.0	37.8	14.25	12.00
	T*(8,L)X*C20	21.0	UC60C	1735	56.5	38.5	13.00	11.00
	T*(8,L)X*C20	21.0	UC60D	1735	56.5	38.5	13.00	11.00
	T*9(C,V)*C20	21.0	FC/MC62D	1655	56.0	37.2	13.20	11.00
	T*9(C,V)*C20	21.0	FC/PC60C	1655	55.0	36.8	13.30	11.00
	T*9(C,V)*C20	21.0	UC60C	1655	53.5	35.0	13.00	10.80
	T*9(C,V)*D20	24.5	FC/MC/PC60D	1615	55.5	36.8	13.30	11.00
	T*9(C,V)*D20	24.5	FC/MC62D	1630	56.0	37.4	13.30	11.00
	T*9(C,V)*D20	24.5	UC60D	1615	53.5	35.0	13.00	10.90
	T*9X*C20	21.0	FC/MC/PC60D	1645	56.5	37.8	13.30	11.00
	T*9X*C20	21.0	FC/PC60C	1560	56.0	37.2	13.00	11.00
	T*9X*C20	21.0	FC64D	1595	57.0	37.8	14.25	12.00
	T*9X*C20	21.0	UC60C	1645	56.0	37.2	13.00	11.00
	T*9X*C20	21.0	UC60D	1645	56.0	37.2	13.00	11.00
	T*9X*D20	24.5	FC/MC/PC60D	1630	56.5	37.8	13.30	11.00
	T*9X*D20	24.5	FC64D	1645	57.0	37.8	14.25	12.00
	T*9X*D20	24.5	UC60D	1630	56.0	37.2	13.00	11.00
	Y*(8,L)C*C20	21.0	FC/MC62D	1615	56.5	37.4	13.50	11.00
	Y*(8,L)C*C20	21.0	FC/PC60C	1605	55.5	37.0	13.50	11.00
	Y*(8,L)C*C20	21.0	FC64D	1615	57.0	37.8	14.00	11.75
	Y*(8,L)C*C20	21.0	UC60C	1605	54.0	35.2	13.00	11.00
	Y*9C*C20	21.0	FC/MC62D	1655	56.0	37.2	13.20	11.00
	Y*9C*C20	21.0	FC/PC60C	1655	55.0	36.8	13.30	11.00
	Y*9C*C20	21.0	FC64D	1655	57.0	37.8	13.50	11.25
	Y*9C*C20	21.0	UC60C	1655	53.5	35.0	13.00	10.80
	Y*9C*D20	24.5	FC/MC/PC60D	1615	55.5	36.8	13.30	11.00
	Y*9C*D20	24.5	FC/MC62D	1630	56.0	37.4	13.30	11.00
	Y*9C*D20	24.5	FC64D	1630	57.0	37.8	13.50	11.25
	Y*9C*D20	24.5	UC60D	1615	53.5	35.0	13.00	10.90

1. MC coils available with a factory installed horizontal drain pan. See price pages for specific model number.
2. High Efficiency Motor Furnaces have B.O.D (Blower on Delay) standard.

PSC furnaces, such as the TG8S, TGLS, and TG9S, use Coil Only Ratings.

ACCESSORIES

Refer to Price Manual for specific model numbers.

Off Cycle Timer Delay - Provides a 5-minute off cycle to prevent rapid recycling of the compressor.

Start Assist Kit (S1-2SA067*) - Provides increased starting torque for areas with low voltage. See Hard Start Kit Accessory Installation Manual for Hard Start Kit part number for each model.

TXV Kits - S1-1TVM series thermal expansion valves precisely meter refrigerant for optimum performance over a wide range of conditions. See System Charge table for TXV part number for each model.

Thermostats - Compatible thermostat controls are available through accessory sourcing. For optimum performance and installation, refer to the UPGNET “Low Voltage Wiring Diagram” document to select and apply controls.

SOUND POWER RATINGS

UNIT MODEL	(dBA)
18	75
24	76
30	76
36	76
42	76
48	77
60	78

Rated in accordance with ARI Standard 270-1995.

TYPICAL INSTALLATION

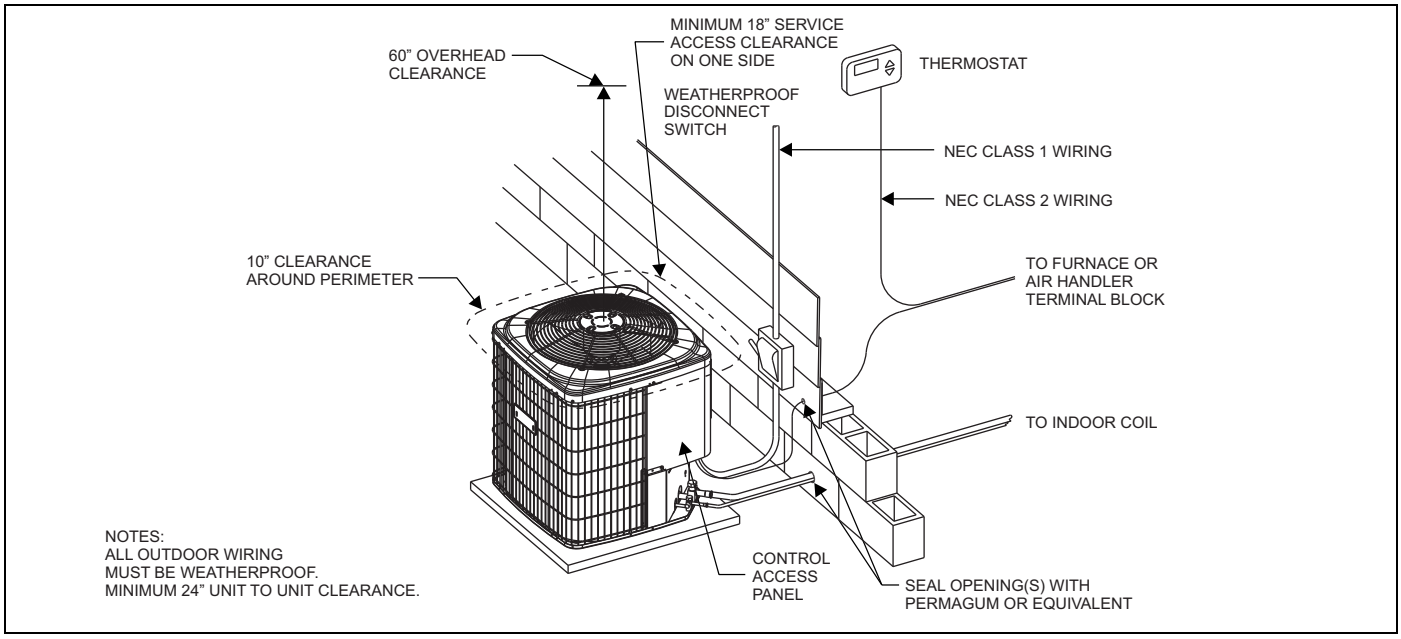

TYPICAL FIELD WIRING

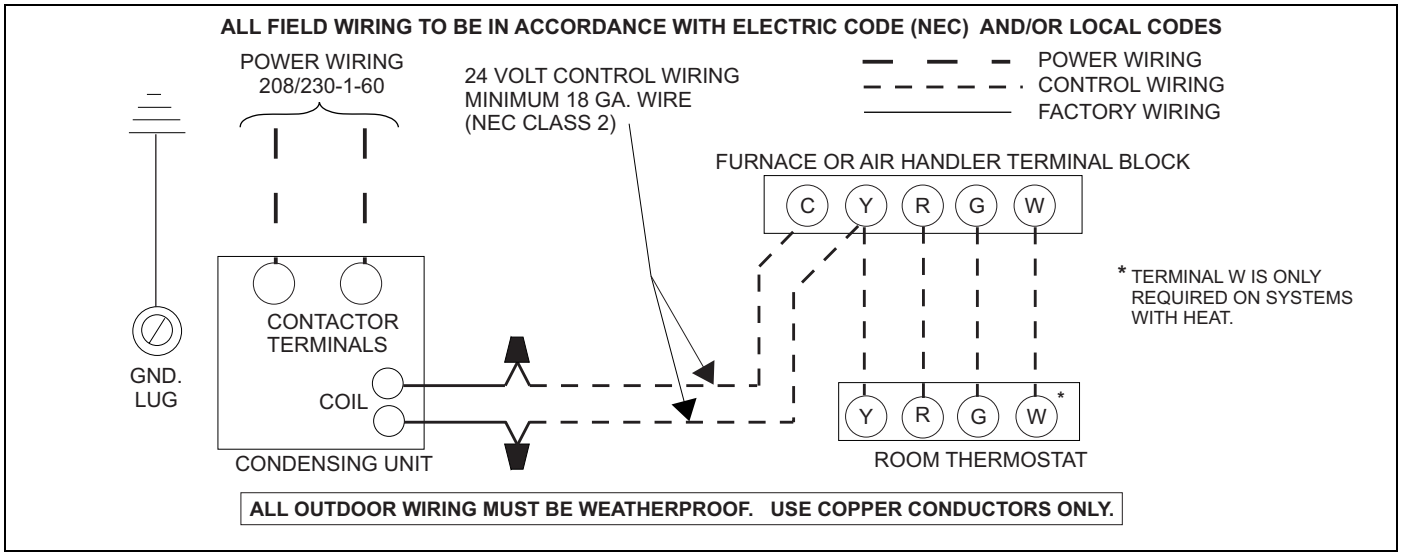

COOLING PERFORMANCE DATA

AIR CONDITIONER MODEL NO.		TCGD18S41S3(H)(E)														
INDOOR COIL MODEL NO.		FC/MC/PC18														
CONDENSING ENTERING AIR TEMPERATURE	IDCFM	450					600					750				
	ID DB (°F)	80	80	75	80	80	80	80	75	80	80	80	80	75	80	80
	ID WB (°F)	57	62	62	67	72	57	62	62	67	72	57	62	62	67	72
65	T.C.	16.3	18.4	18.3	20.1	20.7	17.5	19.0	18.7	20.2	20.9	18.7	19.6	19.1	20.3	21.1
	S.C.	16.3	14.5	12.7	12.6	9.7	17.5	17.1	14.2	13.6	10.3	18.7	17.2	15.7	14.6	10.9
	KW	1.16	1.16	1.16	1.15	1.14	1.21	1.21	1.21	1.20	1.20	1.26	1.26	1.27	1.26	1.25
75	T.C.	15.6	17.4	17.3	19.0	19.9	16.8	18.1	17.7	19.3	20.1	18.1	18.8	18.2	19.5	20.3
	S.C.	15.6	14.3	12.2	12.2	9.3	16.8	16.3	13.8	13.4	10.1	18.1	18.4	15.4	14.6	10.8
	KW	1.28	1.28	1.28	1.28	1.27	1.34	1.34	1.34	1.33	1.33	1.39	1.39	1.39	1.39	1.39
85	T.C.	14.8	16.4	16.2	18.0	19.2	16.1	17.2	16.7	18.4	19.3	17.4	18.0	17.3	18.8	19.5
	S.C.	14.8	14.0	11.8	11.7	9.0	16.1	15.6	13.5	13.2	9.8	17.4	17.2	15.1	14.6	10.6
	KW	1.40	1.41	1.40	1.41	1.41	1.46	1.46	1.46	1.46	1.47	1.52	1.52	1.52	1.52	1.52
95	T.C.	14.0	15.4	15.1	17.0	18.4	15.4	16.3	15.8	17.5	18.6	16.7	17.2	16.4	18.0	18.7
	S.C.	14.0	13.8	11.3	11.3	8.6	15.4	14.8	13.1	13.0	9.6	16.7	15.9	14.9	14.6	10.5
	KW	1.53	1.53	1.53	1.53	1.54	1.59	1.59	1.59	1.59	1.60	1.65	1.65	1.65	1.65	1.66
105	T.C.	13.0	14.2	13.7	15.6	17.1	14.3	15.1	14.3	16.1	17.3	15.5	16.1	15.0	16.6	17.4
	S.C.	13.0	13.1	10.7	10.8	8.3	14.3	14.0	12.4	12.5	9.3	15.5	14.9	14.0	14.3	10.3
	KW	1.69	1.69	1.69	1.70	1.71	1.75	1.75	1.75	1.76	1.77	1.82	1.82	1.81	1.82	1.83
115	T.C.	12.1	13.0	12.3	14.3	15.9	13.2	14.0	13.0	14.7	16.0	14.3	15.0	13.6	15.2	16.2
	S.C.	12.1	12.4	10.1	10.3	8.0	13.2	13.1	11.7	12.1	9.0	14.3	13.8	13.2	13.9	10.1
	KW	1.85	1.85	1.84	1.85	1.87	1.91	1.91	1.91	1.92	1.94	1.98	1.98	1.97	1.98	2.00
125	T.C.	11.1	11.9	10.9	12.9	14.7	12.1	12.9	11.6	13.4	14.8	13.1	13.9	12.3	13.8	14.9
	S.C.	11.1	11.8	9.5	9.8	7.6	12.1	12.3	10.9	11.7	8.7	13.1	12.8	12.3	13.5	9.8
	KW	2.00	2.00	1.99	2.01	2.04	2.08	2.07	2.06	2.08	2.10	2.15	2.14	2.13	2.15	2.16

NOTE: ALL CAPACITIES INCLUDE INDOOR FAN HEAT. KW VALUES ARE FOR THE SYSTEM (OUTDOOR + INDOOR).

Multipliers for determining the performance with other indoor sections.

NOTE: For dry bulb temperatures different than those listed (between 73-87 °F), sensible capacity increases by 1060 BTUH per 1000 CFM per degree above the listed temperature and decreases by 1060 BTUH per 1000 CFM per degree below the listed temperature.

Air Handlers	Coils	T.C.	S.C.	KW
–	FC/MC/PC18	1.00	1.00	1.00
–	UC18	1.00	1.00	1.00
AHE18B	–	1.02	1.07	0.92
AHR18B	–	1.02	1.07	1.02
AHV18B	–	1.01	1.04	0.90
AHV24B	–	1.02	1.05	0.90
AHV30B	–	1.03	1.12	0.91
AHV36C	–	1.04	1.12	0.90
AV*24	–	1.03	1.05	0.94
MV12B	FC/MC18B	1.00	1.03	0.88
MX12B	FC/MC18B	1.02	1.05	0.90

Furnaces	Coils	T.C.	S.C.	KW
T*(8,L)V*A12	FC/MC/PC18A	1.00	0.98	0.88
T*(8,L)V*A12	UC18A	1.00	0.98	0.92
T*(8,L)V*B12	FC/MC/PC18B	1.00	0.98	0.92
T*(8,L)V*B12	UC18B	1.00	0.97	0.92
T*(8,L)X*A12	FC/MC/PC18A	1.01	1.00	0.89
T*(8,L)X*A12	UC18A	1.01	1.04	0.93
T*(8,L)X*B12	FC/MC/PC18B	1.03	1.04	0.91
T*(8,L)X*B12	UC18B	1.03	1.04	0.94
T*9V*A10	FC/MC/PC18A	1.03	1.03	0.91
T*9(C,V)*B12	FC/MC/PC18B	1.00	0.99	0.88
T*9(C,V)*B12	UC18B	1.00	0.98	0.88
T*9X*A10	FC/MC/PC18A	1.01	1.00	0.93
T*9X*B12	FC/MC/PC18B	1.03	1.04	0.91
T*9X*B12	UC18B	1.03	1.04	0.94
Y*(8,L)C*A12	FC/MC/PC18A	1.00	0.98	0.88
Y*(8,L)C*A12	UC18A	1.00	0.98	0.92
Y*(8,L)C*B12	FC/MC/PC18B	1.00	0.98	0.92
Y*(8,L)C*B12	UC18B	1.00	0.97	0.92
Y*9C*B12	FC/MC/PC18B	1.00	0.99	0.88
Y*9C*B12	UC18B	1.00	0.98	0.88

COOLING PERFORMANCE DATA

AIR CONDITIONER MODEL NO.		TCGD24S41S3(H)(E)														
INDOOR COIL MODEL NO.		FC/MC/PC36														
CONDENSING ENTERING AIR TEMPERATURE	IDCFM	600					800					1000				
	ID DB (°F)	80	80	75	80	80	80	80	75	80	80	80	80	75	80	80
	ID WB (°F)	57	62	62	67	72	57	62	62	67	72	57	62	62	67	72
65	T.C.	20.5	25.5	25.4	27.0	28.2	22.6	26.7	26.5	28.3	29.5	24.7	28.0	27.7	29.6	30.8
	S.C.	20.5	19.1	16.6	16.3	13.3	22.6	22.0	18.8	18.0	14.2	24.7	24.9	21.0	19.7	15.1
	KW	1.66	1.67	1.67	1.67	1.67	1.73	1.74	1.74	1.74	1.74	1.81	1.81	1.82	1.82	1.82
75	T.C.	19.1	23.5	23.4	25.5	27.2	21.4	25.0	24.7	26.9	28.6	23.7	26.4	26.0	28.2	29.9
	S.C.	19.1	18.5	15.7	15.8	12.8	21.4	21.1	18.0	17.6	13.8	23.7	23.8	20.4	19.4	14.9
	KW	1.79	1.80	1.80	1.81	1.82	1.87	1.87	1.88	1.89	1.90	1.95	1.95	1.95	1.97	1.98
85	T.C.	17.7	21.6	21.3	24.0	26.3	20.2	23.2	22.8	25.4	27.6	22.7	24.8	24.3	26.9	28.9
	S.C.	17.7	17.9	14.9	15.3	12.3	20.2	20.3	17.3	17.2	13.5	22.7	22.7	19.7	19.1	14.6
	KW	1.92	1.92	1.92	1.95	1.98	2.01	2.01	2.01	2.04	2.06	2.09	2.10	2.09	2.12	2.14
95	T.C.	16.3	19.6	19.3	22.5	25.3	19.0	21.5	21.0	24.0	26.7	21.7	23.3	22.6	25.5	28.0
	S.C.	16.3	17.3	14.1	14.7	11.9	19.0	19.5	16.5	16.8	13.1	21.6	21.6	19.0	18.9	14.4
	KW	2.05	2.05	2.05	2.09	2.14	2.14	2.15	2.14	2.18	2.22	2.24	2.24	2.23	2.27	2.30
105	T.C.	15.0	17.7	17.1	20.1	23.1	17.4	19.5	18.8	21.6	24.4	19.8	21.3	20.4	23.1	25.8
	S.C.	15.0	15.9	13.1	13.8	11.1	17.4	17.8	15.3	15.9	12.5	19.8	19.8	17.4	18.0	13.9
	KW	2.17	2.17	2.16	2.22	2.28	2.28	2.28	2.26	2.31	2.37	2.38	2.39	2.36	2.41	2.45
115	T.C.	13.8	15.8	15.0	17.9	20.9	15.9	17.6	16.6	19.3	22.2	18.0	19.4	18.3	20.7	23.6
	S.C.	13.8	14.6	12.1	12.9	10.4	15.9	16.3	14.0	15.0	11.8	17.9	17.9	15.8	17.1	13.3
	KW	2.29	2.29	2.27	2.34	2.41	2.41	2.41	2.38	2.44	2.51	2.53	2.53	2.49	2.54	2.60
125	T.C.	12.5	13.9	12.8	15.7	18.7	14.4	15.7	14.5	17.0	20.1	16.2	17.5	16.2	18.4	21.4
	S.C.	12.5	13.4	11.2	12.0	9.6	14.4	14.7	12.7	14.1	11.2	16.1	16.1	14.3	16.2	12.8
	KW	2.41	2.41	2.38	2.46	2.55	2.54	2.54	2.50	2.56	2.65	2.67	2.67	2.61	2.67	2.75

NOTE: ALL CAPACITIES INCLUDE INDOOR FAN HEAT. KW VALUES ARE FOR THE SYSTEM (OUTDOOR + INDOOR).

Multipliers for determining the performance with other indoor sections.

NOTE: For dry bulb temperatures different than those listed (between 73-87 °F), sensible capacity increases by 1060 BTUH per 1000 CFM per degree above the listed temperature and decreases by 1060 BTUH per 1000 CFM per degree below the listed temperature.

Air Handlers	Coils	T.C.	S.C.	KW
–	FC/MC/PC32	1.00	1.00	1.00
–	FC/MC/PC35	1.00	1.00	1.00
–	FC/MC/PC36	1.00	1.00	1.00
–	FC/MC/PC37	1.00	1.00	1.00
–	FC/MC/PC43	1.00	1.00	1.00
–	UC36	1.00	1.00	1.00
AHE24B	–	1.02	1.04	0.93
AHE30B	–	1.02	1.04	0.93
AHE36C	–	1.05	1.11	0.92
AHR24B	–	0.99	0.99	0.99
AHV24B	–	1.00	0.99	0.92
AHV30B	–	1.00	1.01	0.92
AHV36C	–	1.00	1.02	0.90
AV*36	–	1.00	1.04	0.92
MV12B	FC/MC35B	1.00	1.04	0.92
MV12B	FC/MC36B	1.00	1.04	0.92
MV12B	FC/MC43B	1.00	1.04	0.92
MX12B	FC/MC35B	1.03	1.04	0.91
MX12B	FC/MC36B	1.01	1.01	0.91
MX12B	FC/MC43B	1.03	1.02	0.90

Continued on next page.

Furnaces	Coils	T.C.	S.C.	KW
T*(8,L)V*A12	FC/MC/PC32A	1.00	1.02	0.96
T*(8,L)V*A12	FC/MC/PC36A	1.00	1.01	0.92
T*(8,L)V*A12	FC/MC/PC37A	1.00	1.02	0.92
T*(8,L)V*A12	UC36A	0.98	0.99	0.94
T*(8,L)V*B12	FC/MC/PC35B	1.00	1.01	0.92
T*(8,L)V*B12	FC/MC/PC36B	1.00	1.02	0.92
T*(8,L)V*B12	FC/MC/PC43B	1.00	1.01	0.92
T*(8,L)V*B12	UC36B	0.98	1.00	0.94
T*(8,L)X*A12	FC/MC/PC32A	1.00	1.01	0.96
T*(8,L)X*A12	FC/MC/PC36A	1.00	1.01	0.92
T*(8,L)X*A12	FC/MC/PC37A	1.00	1.02	0.92
T*(8,L)X*B12	FC/MC/PC35B	1.00	1.02	0.92
T*(8,L)X*B12	FC/MC/PC36B	1.00	1.01	0.92
T*(8,L)X*B12	FC/MC/PC43B	1.00	1.02	0.92
T*9V*A10	FC/MC/PC32A	1.01	1.01	0.96
T*9V*A10	FC/MC/PC36A	1.00	1.01	0.96
T*9V*A10	FC/MC/PC37A	1.03	1.03	0.96
T*9(C,V)*B12	FC/MC/PC35B	1.00	1.02	0.92
T*9(C,V)*B12	FC/MC/PC36B	1.00	1.01	0.92
T*9(C,V)*B12	FC/MC/PC43B	1.00	1.02	0.92
T*9(C,V)*B12	UC36B	0.98	1.00	0.94

Furnaces	Coils	T.C.	S.C.	KW
T*9X*A10	FC/MC/PC32A	1.00	1.01	0.94
T*9X*A10	FC/MC/PC36A	1.01	1.01	0.94
T*9X*A10	FC/MC/PC37A	1.02	1.02	0.95
T*9X*B12	FC/MC/PC36B	1.00	1.01	0.92
T*9X*C16	FC/MC/PC35C	0.99	0.98	0.91
T*9X*C16	FC/MC/PC36C	1.00	1.01	0.92
T*9X*C20	FC/MC/PC35C	1.00	1.02	0.92
T*9X*C20	FC/MC/PC36C	1.00	1.01	0.92
Y*(8,L)C*A12	FC/MC/PC32A	1.00	1.02	0.96
Y*(8,L)C*A12	FC/MC/PC36A	1.00	1.01	0.92
Y*(8,L)C*A12	FC/MC/PC37A	1.00	1.02	0.92
Y*(8,L)C*A12	UC36A	0.98	0.99	0.94
Y*(8,L)C*B12	FC/MC/PC35B	1.00	1.01	0.92
Y*(8,L)C*B12	FC/MC/PC36B	1.00	1.02	0.92
Y*(8,L)C*B12	FC/MC/PC43B	1.00	1.01	0.92
Y*(8,L)C*B12	UC36B	0.98	1.00	0.94
Y*9C*B12	FC/MC/PC35B	1.00	1.02	0.92
Y*9C*B12	FC/MC/PC36B	1.00	1.01	0.92
Y*9C*B12	FC/MC/PC43B	1.00	1.02	0.92
Y*9C*B12	UC36B	0.98	1.00	0.94

COOLING PERFORMANCE DATA

AIR CONDITIONER MODEL NO.		TCGD30S41S3(H)(E)														
INDOOR COIL MODEL NO.		FC/MC/PC32														
CONDENSING ENTERING AIR TEMPERATURE	IDCFM	800					1000					1200				
	ID DB (°F)	80	80	75	80	80	80	80	75	80	80	80	80	75	80	80
	ID WB (°F)	57	62	62	67	72	57	62	62	67	72	57	62	62	67	72
65	T.C.	30.2	33.4	32.8	35.2	36.5	31.7	33.9	33.4	35.5	36.7	33.2	34.3	34.1	35.9	36.9
	S.C.	28.9	26.3	22.1	21.6	16.3	30.3	29.5	24.0	23.0	17.4	31.8	32.6	25.9	24.4	18.5
	KW	2.18	2.20	2.20	2.21	2.23	2.27	2.28	2.29	2.42	2.32	2.37	2.36	2.38	2.63	2.41
75	T.C.	28.0	30.7	30.0	32.9	34.7	29.7	31.5	30.7	33.3	34.8	31.3	32.4	31.5	33.8	35.0
	S.C.	26.9	25.2	20.9	20.7	15.6	28.4	27.6	23.0	22.4	16.7	30.0	30.1	25.1	24.1	17.8
	KW	2.36	2.37	2.37	2.40	2.43	2.46	2.47	2.47	2.49	2.53	2.56	2.56	2.56	2.58	2.62
85	T.C.	25.9	28.0	27.2	30.6	32.8	27.7	29.2	28.0	31.2	33.0	29.5	30.5	28.8	31.7	33.1
	S.C.	24.8	24.0	19.8	19.8	15.0	26.5	25.8	22.0	21.8	16.1	28.2	27.5	24.3	23.8	17.1
	KW	2.54	2.54	2.54	2.59	2.64	2.65	2.65	2.64	2.56	2.73	2.76	2.75	2.74	2.54	2.83
95	T.C.	23.8	25.3	24.5	28.3	31.0	25.7	26.9	25.3	29.0	31.1	27.6	28.6	26.2	29.7	31.3
	S.C.	22.8	22.9	18.6	18.9	14.4	24.6	23.9	21.0	21.2	15.4	26.5	25.0	23.5	23.5	16.5
	KW	2.72	2.72	2.71	2.78	2.84	2.84	2.83	2.81	2.64	2.94	2.95	2.94	2.92	2.49	3.04
105	T.C.	21.8	23.1	21.7	25.2	27.9	23.4	24.6	22.6	25.8	28.0	25.0	26.1	23.5	26.4	28.1
	S.C.	20.9	21.1	17.4	17.7	13.4	22.4	22.2	19.3	19.3	14.5	24.0	23.3	21.3	20.8	15.7
	KW	2.91	3.02	2.88	2.96	3.04	3.03	3.08	2.99	2.90	3.14	3.15	3.14	3.10	2.84	3.24
115	T.C.	19.8	21.1	19.1	22.2	25.0	21.2	22.4	19.9	22.7	25.0	22.6	23.6	20.8	23.2	25.0
	S.C.	19.0	19.3	16.2	16.7	12.5	20.3	20.5	17.7	17.4	13.7	21.6	21.6	19.2	18.2	14.9
	KW	3.10	3.31	3.05	3.14	3.23	3.22	3.33	3.17	3.16	3.33	3.34	3.34	3.29	3.18	3.43
125	T.C.	17.8	19.0	16.4	19.2	22.0	19.0	20.1	17.3	19.6	22.0	20.1	21.2	18.2	20.0	22.0
	S.C.	17.1	17.5	15.1	15.6	11.6	18.2	18.7	16.1	15.6	12.9	19.2	20.0	17.1	15.6	14.2
	KW	3.28	3.61	3.22	3.31	3.42	3.41	3.57	3.34	3.42	3.52	3.53	3.54	3.47	3.53	3.63

NOTE: ALL CAPACITIES INCLUDE INDOOR FAN HEAT. KW VALUES ARE FOR THE SYSTEM (OUTDOOR + INDOOR).

Multipliers for determining the performance with other indoor sections.

NOTE: For dry bulb temperatures different than those listed (between 73-87 °F), sensible capacity increases by 1060 BTUH per 1000 CFM per degree above the listed temperature and decreases by 1060 BTUH per 1000 CFM per degree below the listed temperature.

Air Handlers	Coils	T.C.	S.C.	KW
–	FC/MC/PC32	1.00	1.00	1.00
–	FC/MC/PC35	1.00	1.00	1.00
–	FC/MC/PC37	1.00	1.00	1.00
–	FC/MC/PC43	1.00	1.00	1.00
AHE30B	–	1.01	1.02	0.95
AHE36C	–	1.04	1.05	0.94
AHR30B	–	1.01	1.06	1.01
AHR36B	–	1.03	1.05	1.03
AHV30B	–	1.00	1.01	0.96
AHV36C	–	1.00	1.00	0.92
AHV42D	–	1.03	1.09	0.93
AV*36	–	1.03	1.04	0.95
MV12B	FC/MC35B	1.00	1.03	0.92
MV12B	FC/MC43B	1.00	1.03	0.92
MV16C	FC/MC35C	1.03	1.03	0.95
MV16C	FC/MC43C	1.03	1.03	0.95
MX12B	FC/MC35B	1.03	1.08	0.95
MX12B	FC/MC43B	1.05	1.10	0.94
MX16C	FC/MC35C	1.03	1.06	0.91
MX16C	FC/MC43C	1.04	1.04	0.92

Continued on next page.

Furnaces	Coils	T.C.	S.C.	KW
T*(8,L)V*A12	FC/MC/PC32A	1.01	1.04	1.01
T*(8,L)V*A12	FC/MC/PC37A	1.03	1.04	0.98
T*(8,L)V*B12	FC/MC/PC35B	1.02	1.02	0.98
T*(8,L)V*B12	FC/MC/PC43B	1.03	1.05	0.95
T*(8,L)V*C16	FC/MC/PC35C	1.02	1.05	0.94
T*(8,L)V*C16	FC/MC/PC43C	1.03	1.05	0.95
T*(8,L)V*C20	FC/MC/PC35C	1.03	1.07	0.95
T*(8,L)V*C20	FC/MC/PC43C	1.03	1.05	0.95
T*(8,L)X*A12	FC/MC/PC32A	1.01	1.02	1.01
T*(8,L)X*A12	FC/MC/PC37A	1.03	1.09	0.99
T*(8,L)X*B12	FC/MC/PC35B	1.03	1.09	0.99
T*(8,L)X*B12	FC/MC/PC43B	1.03	1.09	0.95
T*(8,L)X*C16	FC/MC/PC35C	1.03	1.09	0.95
T*(8,L)X*C16	FC/MC/PC43C	0.97	0.92	0.89
T*(8,L)X*C20	FC/MC/PC35C	0.99	0.98	0.91
T*(8,L)X*C20	FC/MC/PC43C	1.02	1.01	0.94
T*9(C,V)*B12	FC/MC/PC35B	1.01	1.05	0.97
T*9(C,V)*B12	FC/MC/PC43B	1.03	1.05	0.99
T*9(C,V)*C16	FC/MC/PC35C	1.02	1.05	0.94
T*9(C,V)*C16	FC/MC/PC43C	1.03	1.05	0.95
T*9(C,V)*C20	FC/MC/PC35C	1.02	1.05	0.94

Furnaces	Coils	T.C.	S.C.	KW
T*9(C,V)*C20	FC/MC/PC43C	1.03	1.05	0.95
T*9X*B12	FC/MC/PC35B	1.03	1.09	0.94
T*9X*B12	FC/MC/PC43B	1.03	1.09	0.99
T*9X*C16	FC/MC/PC35C	1.03	1.07	0.94
T*9X*C16	FC/MC/PC43C	1.03	1.09	0.95
T*9X*C20	FC/MC/PC43C	0.97	0.92	0.89
Y*(8,L)C*A12	FC/MC/PC32A	1.01	1.04	1.01
Y*(8,L)C*A12	FC/MC/PC37A	1.03	1.04	0.98
Y*(8,L)C*B12	FC/MC/PC35B	1.02	1.02	0.98
Y*(8,L)C*B12	FC/MC/PC43B	1.03	1.05	0.95
Y*(8,L)C*C16	FC/MC/PC35C	1.02	1.05	0.94
Y*(8,L)C*C16	FC/MC/PC43C	1.03	1.05	0.95
Y*(8,L)C*C20	FC/MC/PC35C	1.03	1.07	0.95
Y*(8,L)C*C20	FC/MC/PC43C	1.03	1.05	0.95
Y*9C*B12	FC/MC/PC35B	1.01	1.05	0.97
Y*9C*B12	FC/MC/PC43B	1.03	1.05	0.99
Y*9C*C16	FC/MC/PC35C	1.02	1.05	0.94
Y*9C*C16	FC/MC/PC43C	1.03	1.05	0.95
Y*9C*C20	FC/MC/PC35C	1.02	1.05	0.94
Y*9C*C20	FC/MC/PC43C	1.03	1.05	0.95

COOLING PERFORMANCE DATA

AIR CONDITIONER MODEL NO.		TCGD36S41S3(H)(E)														
INDOOR COIL MODEL NO.		FC/MC/PC37														
CONDENSING ENTERING AIR TEMPERATURE	IDCFM	1000					1200					1400				
	ID DB (°F)	80	80	75	80	80	80	80	75	80	80	80	80	75	80	80
	ID WB (°F)	57	62	62	67	72	57	62	62	67	72	57	62	62	67	72
65	T.C.	35.3	37.4	37.0	39.3	40.4	36.3	38.1	37.4	39.7	40.2	37.3	38.8	37.8	40.1	40.1
	S.C.	33.1	29.8	25.3	24.2	18.1	34.1	31.8	26.8	25.2	18.5	35.2	33.8	28.3	26.1	18.9
	KW	2.40	2.42	2.41	2.44	2.44	2.49	2.50	2.50	2.53	2.53	2.58	2.58	2.60	2.61	2.63
75	T.C.	33.8	35.6	35.1	37.7	39.3	34.9	36.4	35.6	38.1	39.3	36.1	37.2	36.1	38.5	39.3
	S.C.	31.7	29.4	24.8	23.9	17.9	32.9	31.4	26.5	25.1	18.5	34.1	33.3	28.2	26.3	19.1
	KW	2.61	2.63	2.62	2.66	2.67	2.71	2.72	2.71	2.75	2.77	2.80	2.80	2.80	2.83	2.86
85	T.C.	32.4	33.8	33.3	36.2	38.1	33.6	34.7	33.8	36.6	38.3	34.8	35.6	34.4	37.0	38.4
	S.C.	30.4	29.0	24.3	23.5	17.7	31.7	30.9	26.1	25.0	18.5	33.0	32.8	28.0	26.5	19.3
	KW	2.82	2.84	2.84	2.88	2.91	2.92	2.93	2.92	2.96	3.00	3.02	3.03	3.01	3.05	3.09
95	T.C.	31.0	32.0	31.5	34.6	37.0	32.3	33.0	32.1	35.0	37.3	33.6	34.0	32.7	35.4	37.6
	S.C.	29.0	28.6	23.7	23.1	17.5	30.5	30.5	25.8	24.9	18.5	31.9	32.3	27.9	26.6	19.5
	KW	3.04	3.05	3.05	3.09	3.14	3.14	3.15	3.13	3.18	3.23	3.24	3.25	3.22	3.27	3.32
105	T.C.	28.0	28.9	27.8	31.1	34.3	28.9	29.9	28.5	31.6	34.6	29.9	30.9	29.2	32.0	34.9
	S.C.	26.3	26.2	22.0	21.9	16.6	27.4	27.8	23.8	23.8	17.7	28.5	29.4	25.6	25.7	18.9
	KW	3.25	3.25	3.23	3.30	3.37	3.36	3.36	3.33	3.39	3.47	3.47	3.47	3.43	3.49	3.56
115	T.C.	25.0	25.9	24.3	27.8	31.7	25.7	26.9	25.1	28.2	32.0	26.4	27.9	25.9	28.7	32.3
	S.C.	23.7	23.9	20.3	20.8	15.8	24.4	25.2	21.8	22.8	17.0	25.2	26.6	23.4	24.7	18.3
	KW	3.45	3.46	3.42	3.50	3.60	3.57	3.57	3.52	3.60	3.70	3.68	3.69	3.63	3.70	3.79
125	T.C.	22.1	22.9	20.7	24.4	29.0	22.5	23.9	21.7	24.9	29.3	22.9	24.9	22.6	25.4	29.6
	S.C.	21.1	21.5	18.6	19.7	15.0	21.5	22.7	19.9	21.7	16.3	21.9	23.8	21.1	23.8	17.7
	KW	3.65	3.66	3.60	3.70	3.83	3.78	3.78	3.71	3.80	3.93	3.90	3.91	3.83	3.91	4.03

NOTE: ALL CAPACITIES INCLUDE INDOOR FAN HEAT. KW VALUES ARE FOR THE SYSTEM (OUTDOOR + INDOOR).

Multipliers for determining the performance with other indoor sections.

NOTE: For dry bulb temperatures different than those listed (between 73-87 °F), sensible capacity increases by 1060 BTUH per 1000 CFM per degree above the listed temperature and decreases by 1060 BTUH per 1000 CFM per degree below the listed temperature.

Air Handlers	Coils	T.C.	S.C.	KW
–	FC/MC/PC37	1.00	1.00	1.00
–	FC/MC/PC43	1.00	1.00	1.00
–	FC/MC/PC48	1.00	1.00	1.00
–	UC48	1.00	1.00	1.00
AHE36C	–	1.02	1.02	0.93
AHE42D	–	1.02	1.04	0.92
AHR36B	–	0.99	0.99	0.99
AHR42C	–	1.02	1.02	0.99
AHV36C	–	1.02	1.04	0.94
AHV42D	–	1.03	1.04	0.92
AHV48D	–	1.02	1.02	0.91
AV*36	–	1.00	1.02	0.92
MV12B	FC/MC43B	1.01	1.02	0.95
MV12D	FC/MC48D	1.00	1.02	0.92
MV16C	FC/MC43C	1.03	1.02	0.94
MV16C	FC/MC48C	1.03	1.02	0.94
MV20D	FC/MC48D	1.03	1.03	0.94
MX12B	FC/MC43B	1.01	1.02	0.95
MX12D	FC/MC48D	1.03	1.03	0.92
MX16C	FC/MC43C	1.01	1.01	0.91
MX16C	FC/MC48C	1.03	1.03	0.91

Continued on next page.

Furnaces	Coils	T.C.	S.C.	KW
T*(8,L)V*A12	FC/MC/PC37A	0.97	0.93	0.97
T*(8,L)V*B12	FC/MC/PC43B	1.01	1.02	1.01
T*(8,L)V*C16	FC/MC/PC43C	1.02	1.02	0.97
T*(8,L)V*C16	FC/MC/PC48C	1.03	1.05	0.94
T*(8,L)V*C16	UC48C	0.99	1.00	0.95
T*(8,L)V*C20	FC/MC/PC43C	1.02	1.02	0.93
T*(8,L)V*C20	FC/MC/PC48C	1.03	1.05	0.94
T*(8,L)V*C20	UC48C	0.99	1.00	0.95
T*(8,L)X*A12	FC/MC/PC37A	1.01	1.02	0.98
T*(8,L)X*B12	FC/MC/PC43B	1.01	1.02	0.98
T*(8,L)X*C16	FC/MC/PC43C	1.01	1.00	0.96
T*(8,L)X*C16	FC/MC/PC48C	1.02	1.02	0.97
T*(8,L)X*C16	UC48C	0.98	1.00	0.93
T*(8,L)X*C20	FC/MC/PC43C	1.02	1.03	0.96
T*(8,L)X*C20	FC/MC/PC48C	1.02	1.04	0.98
T*(8,L)X*C20	UC48C	0.99	1.02	0.95
T*9(C,V)*B12	FC/MC/PC43B	1.01	1.02	1.01
T*9(C,V)*C16	FC/MC/PC43C	1.01	1.02	0.97
T*9(C,V)*C16	FC/MC/PC48C	1.03	1.05	0.98
T*9(C,V)*C16	UC48C	0.99	1.00	0.95
T*9(C,V)*C20	FC/MC/PC43C	1.02	1.02	0.97
T*9(C,V)*C20	FC/MC/PC48C	1.03	1.07	0.98
T*9(C,V)*C20	UC48C	1.00	1.03	1.00
T*9(C,V)*D20	FC/MC/PC48D	1.03	1.06	0.94
T*9(C,V)*D20	UC48D	0.99	1.01	0.95
T*9X*B12	FC/MC/PC43B	1.01	1.02	0.98

Furnaces	Coils	T.C.	S.C.	KW
T*9X*C16	FC/MC/PC43C	1.01	1.02	0.98
T*9X*C16	FC/MC/PC48C	1.02	1.04	0.98
T*9X*C16	UC48C	0.99	1.00	0.97
T*9X*C20	FC/MC/PC43C	1.00	0.99	0.96
T*9X*C20	FC/MC/PC48C	1.01	1.01	0.97
T*9X*C20	UC48C	0.97	0.99	0.95
T*9X*D20	FC/MC/PC48D	1.01	1.01	0.97
T*9X*D20	UC48D	0.97	0.99	0.95
Y*(8,L)C*A12	FC/MC/PC37A	0.97	0.93	0.97
Y*(8,L)C*B12	FC/MC/PC43B	1.01	1.02	1.01
Y*(8,L)C*C16	FC/MC/PC43C	1.02	1.02	0.97
Y*(8,L)C*C16	FC/MC/PC48C	1.03	1.05	0.94
Y*(8,L)C*C16	UC48C	0.99	1.00	0.95
Y*(8,L)C*C20	FC/MC/PC43C	1.02	1.02	0.93
Y*(8,L)C*C20	FC/MC/PC48C	1.03	1.05	0.94
Y*(8,L)C*C20	UC48C	0.99	1.00	0.95
Y*9C*B12	FC/MC/PC43B	1.01	1.02	1.01
Y*9C*C16	FC/MC/PC43C	1.01	1.02	0.97
Y*9C*C16	FC/MC/PC48C	1.03	1.05	0.98
Y*9C*C16	UC48C	0.99	1.00	0.95
Y*9C*C20	FC/MC/PC43C	1.02	1.02	0.97
Y*9C*C20	FC/MC/PC48C	1.03	1.07	0.98
Y*9C*C20	UC48C	1.00	1.03	1.00
Y*9C*D20	FC/MC/PC48D	1.03	1.06	0.94
Y*9C*D20	UC48D	0.99	1.01	0.95

COOLING PERFORMANCE DATA

AIR CONDITIONER MODEL NO.		TCGD42S41S4(H)(E)														
INDOOR COIL MODEL NO.		FC/MC/PC43														
CONDENSING ENTERING AIR TEMPERATURE	IDCFM	1200					1400					1600				
	ID DB (°F)	80	80	75	80	80	80	80	75	80	80	80	80	75	80	80
	ID WB (°F)	57	62	62	67	72	57	62	62	67	72	57	62	62	67	72
65	T.C.	41.8	43.9	43.7	47.2	49.9	43.3	45.0	44.7	47.9	50.9	44.7	46.0	45.7	48.5	51.9
	S.C.	41.6	36.4	30.9	29.8	23.8	43.0	38.5	32.5	31.0	24.2	44.3	40.7	34.0	32.2	24.5
	KW	2.79	2.81	2.82	2.82	2.85	2.80	2.82	2.82	2.83	2.85	2.80	2.83	2.82	2.84	2.86
75	T.C.	39.8	41.2	41.3	45.1	48.2	41.4	42.3	42.2	45.7	49.0	42.9	43.3	43.2	46.4	49.8
	S.C.	39.5	35.2	29.8	29.1	23.1	41.0	37.4	31.6	30.6	23.8	42.5	39.7	33.5	32.1	24.5
	KW	3.08	3.10	3.10	3.13	3.17	3.10	3.11	3.11	3.14	3.18	3.12	3.13	3.12	3.15	3.19
85	T.C.	37.8	38.6	38.8	43.0	46.5	39.4	39.6	39.7	43.6	47.1	41.0	40.6	40.7	44.3	47.7
	S.C.	37.5	34.1	28.7	28.4	22.4	39.1	36.4	30.8	30.2	23.4	40.7	38.7	32.9	32.0	24.5
	KW	3.38	3.39	3.39	3.44	3.50	3.41	3.41	3.41	3.46	3.51	3.43	3.42	3.42	3.47	3.52
95	T.C.	35.8	35.9	36.3	40.9	44.8	37.5	36.9	37.3	41.5	45.2	39.2	37.9	38.2	42.1	45.6
	S.C.	35.4	33.0	27.6	27.7	21.7	37.1	35.3	30.0	29.8	23.0	38.8	37.6	32.3	31.9	24.4
	KW	3.67	3.68	3.68	3.76	3.82	3.71	3.70	3.70	3.77	3.83	3.75	3.72	3.72	3.79	3.84
105	T.C.	33.1	33.1	32.6	37.0	41.6	34.7	34.2	33.5	37.6	42.0	36.3	35.4	34.4	38.2	42.4
	S.C.	32.7	31.0	26.3	26.4	20.7	34.3	33.1	28.4	28.6	22.1	35.9	35.2	30.5	30.8	23.5
	KW	3.98	3.98	3.96	4.05	4.14	4.02	4.01	3.98	4.07	4.16	4.06	4.05	4.01	4.09	4.18
115	T.C.	30.5	30.2	28.9	33.3	38.4	32.0	31.6	29.8	33.8	38.8	33.4	33.0	30.8	34.4	39.3
	S.C.	30.2	29.1	25.0	25.1	19.8	31.6	30.9	26.8	27.4	21.3	33.1	32.7	28.7	29.6	22.7
	KW	4.27	4.27	4.22	4.33	4.45	4.32	4.31	4.26	4.36	4.48	4.37	4.36	4.29	4.39	4.51
125	T.C.	27.9	27.4	25.2	29.5	35.2	29.2	29.0	26.2	30.0	35.7	30.6	30.5	27.1	30.5	36.2
	S.C.	27.6	27.3	23.7	23.8	18.9	28.9	28.8	25.3	26.2	20.4	30.3	30.3	26.9	28.5	21.8
	KW	4.57	4.56	4.49	4.62	4.77	4.62	4.62	4.53	4.65	4.80	4.67	4.67	4.57	4.68	4.84

NOTE: ALL CAPACITIES INCLUDE INDOOR FAN HEAT. KW VALUES ARE FOR THE SYSTEM (OUTDOOR + INDOOR).

Multipliers for determining the performance with other indoor sections.

NOTE: For dry bulb temperatures different than those listed (between 73-87 °F), sensible capacity increases by 1060 BTUH per 1000 CFM per degree above the listed temperature and decreases by 1060 BTUH per 1000 CFM per degree below the listed temperature.

Air Handlers	Coils	T.C.	S.C.	KW
–	FC/MC/PC43	1.00	1.00	1.00
–	FC/MC/PC48	1.01	1.01	1.01
–	FC/MC/PC60	1.00	0.99	1.00
–	FC/MC62	1.01	1.02	1.01
–	FC64	1.01	1.03	0.99
–	UC48	1.01	1.01	1.01
AHE42D	–	1.01	1.03	0.93
AHE48D	–	1.01	1.02	0.93
AHE60D	–	1.01	1.04	0.93
AHR42C	–	1.01	1.03	1.01
AHR48D	–	0.99	0.97	0.99
AHR60D	–	1.01	1.01	1.01
AHV42D	–	1.01	1.01	0.95
AHV48D	–	1.00	0.98	0.92
AHV60D	–	1.01	1.01	0.93
AV*48	–	1.01	1.02	0.93
AV*60	–	1.01	1.02	0.93
MV16C	FC/MC43C	1.01	1.01	0.93
MV16C	FC/MC48C	1.01	1.02	0.95
MV16C	FC60C	1.01	1.01	0.97
MV20D	FC/MC48D	1.01	1.04	0.93
MV20D	FC/MC60D	1.01	1.01	0.95
MV20D	FC/MC62D	1.01	1.03	0.93
MV20D	FC64D	1.01	1.03	0.91
MX16C	FC/MC43C	1.01	1.01	0.93
MX16C	FC/MC48C	1.01	1.01	0.93
MX16C	FC60C	1.01	1.01	0.93

Air Handlers	Coils	T.C.	S.C.	KW
MX20D	FC/MC48D	1.01	1.01	0.93
MX20D	FC/MC60D	1.01	1.03	0.93
MX20D	FC/MC62D	1.01	1.06	0.91
MX20D	FC64D	1.01	1.06	0.89

Furnaces	Coils	T.C.	S.C.	KW
T*(8,L)V*B12	FC/MC/PC43B	0.99	0.97	0.97
T*(8,L)V*C16	FC/MC/PC43C	1.01	1.01	0.97
T*(8,L)V*C16	FC/MC/PC48C	1.01	1.00	0.97
T*(8,L)V*C16	FC/MC/PC48D	1.01	1.00	0.97
T*(8,L)V*C16	FC/MC/PC60D	1.01	1.01	0.97
T*(8,L)V*C16	FC/MC62D	1.01	1.03	0.97
T*(8,L)V*C16	FC/PC60C	1.01	1.01	0.97
T*(8,L)V*C16	FC64D	1.01	1.03	0.93
T*(8,L)V*C16	UC48C	1.01	1.01	0.97
T*(8,L)V*C16	UC60C	1.01	1.01	0.97
T*(8,L)V*C20	FC/MC/PC43C	1.01	1.03	0.99
T*(8,L)V*C20	FC/MC/PC48C	1.01	1.01	0.97
T*(8,L)V*C20	FC/MC/PC48D	1.01	1.01	0.97
T*(8,L)V*C20	FC/MC/PC60D	1.01	1.01	0.95
T*(8,L)V*C20	FC/MC62D	1.01	1.03	0.95
T*(8,L)V*C20	FC/PC60C	1.01	1.01	0.95
T*(8,L)V*C20	FC64D	1.01	1.03	0.93
T*(8,L)V*C20	UC48C	1.01	1.01	0.95
T*(8,L)V*C20	UC60C	1.01	1.01	0.97
T*(8,L)X*B12	FC/MC/PC43B	1.00	0.99	0.96

Continued on next page.

Furnaces	Coils	T.C.	S.C.	KW
T*(8,L)X*C16	FC/MC/PC43C	1.01	1.04	0.95
T*(8,L)X*C16	FC/MC/PC48C	1.01	1.01	0.93
T*(8,L)X*C16	FC/MC/PC48D	1.01	1.01	0.93
T*(8,L)X*C16	FC/MC/PC60D	1.01	1.01	0.93
T*(8,L)X*C16	FC/MC62D	1.01	1.03	0.93
T*(8,L)X*C16	FC/PC60C	1.01	1.01	0.93
T*(8,L)X*C16	FC64D	1.01	1.04	0.91
T*(8,L)X*C16	UC48C	1.01	1.01	0.93
T*(8,L)X*C16	UC60C	1.01	1.01	0.93
T*(8,L)X*C20	FC/MC/PC43C	1.01	1.02	0.95
T*(8,L)X*C20	FC/MC/PC48C	1.01	1.04	0.93
T*(8,L)X*C20	FC/MC/PC48D	1.01	1.04	0.93
T*(8,L)X*C20	FC/MC/PC60D	1.01	1.04	0.93
T*(8,L)X*C20	FC/MC62D	1.01	1.06	0.93
T*(8,L)X*C20	FC/PC60C	1.01	1.04	0.93
T*(8,L)X*C20	FC64D	1.01	1.07	0.91
T*(8,L)X*C20	UC48C	1.01	1.04	0.93
T*(8,L)X*C20	UC60C	1.01	1.04	0.95
T*9(C,V)*C16	FC/MC/PC43C	1.01	1.01	0.99
T*9(C,V)*C16	FC/MC/PC48C	1.01	1.02	0.97
T*9(C,V)*C16	FC/MC/PC48D	1.01	1.02	0.97
T*9(C,V)*C16	FC/MC/PC60D	1.00	1.00	1.00
T*9(C,V)*C16	FC/MC62D	1.01	1.03	1.01
T*9(C,V)*C16	FC/PC60C	1.00	1.00	1.00
T*9(C,V)*C16	FC64D	1.01	1.03	0.97
T*9(C,V)*C16	UC48C	1.01	1.01	0.97
T*9(C,V)*C16	UC60C	1.00	0.99	1.00
T*9(C,V)*C20	FC/MC/PC43C	1.01	1.01	0.99
T*9(C,V)*C20	FC/MC/PC48C	1.01	1.02	0.99
T*9(C,V)*C20	FC/MC/PC48D	1.01	1.02	0.99
T*9(C,V)*C20	FC/MC/PC60D	1.01	1.00	0.99
T*9(C,V)*C20	FC/MC62D	1.01	1.03	0.99
T*9(C,V)*C20	FC/PC60C	1.01	1.00	0.99
T*9(C,V)*C20	FC64D	1.01	1.03	0.95
T*9(C,V)*C20	UC48C	1.01	1.01	0.99
T*9(C,V)*C20	UC60C	1.00	1.00	0.98
T*9(C,V)*D20	FC/MC/PC48D	1.01	1.01	0.97
T*9(C,V)*D20	FC/MC/PC60D	1.01	1.01	0.97
T*9(C,V)*D20	FC/MC62D	1.01	1.03	0.97
T*9(C,V)*D20	FC64D	1.01	1.03	0.95
T*9(C,V)*D20	UC48D	1.01	1.01	0.97
T*9(C,V)*D20	UC60D	1.00	1.00	0.98
T*9X*B12	FC/MC/PC43B	1.00	0.97	0.96
T*9X*C16	FC/MC/PC43C	1.01	1.01	0.97
T*9X*C16	FC/MC/PC48C	1.01	1.02	0.95
T*9X*C16	FC/MC/PC48D	1.01	1.02	0.95
T*9X*C16	FC/MC/PC60D	1.01	1.01	0.97
T*9X*C16	FC/MC62D	1.01	1.03	0.95
T*9X*C16	FC/PC60C	1.01	1.01	0.97
T*9X*C16	FC64D	1.01	1.03	0.93
T*9X*C16	UC48C	1.01	1.02	0.95
T*9X*C16	UC60C	1.01	1.01	0.97
T*9X*C20	FC/MC/PC43C	1.01	1.02	0.95
T*9X*C20	FC/MC/PC48C	1.01	1.02	0.95
T*9X*C20	FC/MC/PC48D	1.01	1.02	0.95

Furnaces	Coils	T.C.	S.C.	KW
T*9X*C20	FC/MC/PC60D	1.01	1.01	0.95
T*9X*C20	FC/MC62D	1.01	1.03	0.95
T*9X*C20	FC/PC60C	1.01	1.01	0.95
T*9X*C20	FC64D	1.01	1.03	0.91
T*9X*C20	UC48C	1.01	1.02	0.95
T*9X*C20	UC60C	1.01	1.01	0.95
T*9X*D20	FC/MC/PC48D	1.01	1.02	0.93
T*9X*D20	FC/MC/PC60D	1.01	1.04	0.93
T*9X*D20	FC/MC62D	1.01	1.03	0.93
T*9X*D20	FC64D	1.01	1.03	0.91
T*9X*D20	UC48D	1.01	1.01	0.93
T*9X*D20	UC60D	1.01	1.05	0.93
Y*(8,L)C*B12	FC/MC/PC43B	0.99	0.97	0.97
Y*(8,L)C*C16	FC/MC/PC43C	1.01	1.01	0.97
Y*(8,L)C*C16	FC/MC/PC48C	1.01	1.00	0.97
Y*(8,L)C*C16	FC/MC/PC48D	1.01	1.00	0.97
Y*(8,L)C*C16	FC/MC/PC60D	1.01	1.01	0.97
Y*(8,L)C*C16	FC/MC62D	1.01	1.03	0.97
Y*(8,L)C*C16	FC/PC60C	1.01	1.01	0.97
Y*(8,L)C*C16	FC64D	1.01	1.03	0.93
Y*(8,L)C*C16	UC48C	1.01	1.01	0.97
Y*(8,L)C*C16	UC60C	1.01	1.01	0.97
Y*(8,L)C*C20	FC/MC/PC43C	1.01	1.03	0.99
Y*(8,L)C*C20	FC/MC/PC48C	1.01	1.01	0.97
Y*(8,L)C*C20	FC/MC/PC48D	1.01	1.01	0.97
Y*(8,L)C*C20	FC/MC/PC60D	1.01	1.01	0.95
Y*(8,L)C*C20	FC/MC62D	1.01	1.03	0.95
Y*(8,L)C*C20	FC/PC60C	1.01	1.01	0.95
Y*(8,L)C*C20	FC64D	1.01	1.03	0.93
Y*(8,L)C*C20	UC48C	1.01	1.01	0.95
Y*(8,L)C*C20	UC60C	1.01	1.01	0.97
Y*9C*C16	FC/MC/PC43C	1.01	1.01	0.99
Y*9C*C16	FC/MC/PC48C	1.01	1.02	0.97
Y*9C*C16	FC/MC/PC48D	1.01	1.02	0.97
Y*9C*C16	FC/MC/PC60D	1.00	1.00	1.00
Y*9C*C16	FC/MC62D	1.01	1.03	1.01
Y*9C*C16	FC/PC60C	1.00	1.00	1.00
Y*9C*C16	FC64D	1.01	1.03	0.97
Y*9C*C16	UC48C	1.01	1.01	0.97
Y*9C*C16	UC60C	1.00	0.99	1.00
Y*9C*C20	FC/MC/PC43C	1.01	1.01	0.99
Y*9C*C20	FC/MC/PC48C	1.01	1.02	0.99
Y*9C*C20	FC/MC/PC48D	1.01	1.02	0.99
Y*9C*C20	FC/MC/PC60D	1.01	1.00	0.99
Y*9C*C20	FC/MC62D	1.01	1.03	0.99
Y*9C*C20	FC/PC60C	1.01	1.00	0.99
Y*9C*C20	FC64D	1.01	1.03	0.95
Y*9C*C20	UC48C	1.01	1.01	0.99
Y*9C*C20	UC60C	1.00	1.00	0.98
Y*9C*D20	FC/MC/PC48D	1.01	1.01	0.97
Y*9C*D20	FC/MC/PC60D	1.01	1.01	0.97
Y*9C*D20	FC/MC62D	1.01	1.03	0.97
Y*9C*D20	FC64D	1.01	1.03	0.95
Y*9C*D20	UC48D	1.01	1.01	0.97
Y*9C*D20	UC60D	1.00	1.00	0.98

COOLING PERFORMANCE DATA

AIR CONDITIONER MODEL NO.		TCGD48S41S3(H)(E)														
INDOOR COIL MODEL NO.		FC/MC/PC48														
CONDENSING ENTERING AIR TEMPERATURE	IDCFM	1400					1600					1800				
	ID DB (°F)	80	80	75	80	80	80	80	75	80	80	80	80	75	80	80
	ID WB (°F)	57	62	62	67	72	57	62	62	67	72	57	62	62	67	72
65	T.C.	49.7	51.4	50.5	55.8	54.6	52.0	53.1	51.9	56.3	55.4	54.4	54.7	53.2	56.9	56.3
	S.C.	46.9	42.8	35.7	35.7	25.9	48.8	45.6	37.9	37.1	27.3	50.8	48.3	40.1	38.5	28.8
	KW	3.36	3.41	3.42	3.45	3.50	3.38	3.42	3.43	3.46	3.52	3.41	3.43	3.45	3.47	3.53
75	T.C.	47.5	48.6	47.7	52.8	52.3	49.8	50.3	48.9	53.6	53.1	52.0	52.1	50.1	54.3	53.8
	S.C.	44.6	41.7	34.7	34.6	25.2	46.6	44.5	36.9	36.3	26.6	48.6	47.2	39.0	37.9	27.9
	KW	3.65	3.68	3.68	3.74	3.82	3.67	3.70	3.70	3.76	3.83	3.70	3.72	3.72	3.77	3.85
85	T.C.	45.4	45.8	44.8	49.9	50.1	47.5	47.6	46.0	50.8	50.7	49.7	49.4	47.1	51.7	51.3
	S.C.	42.3	40.6	33.7	33.5	24.6	44.4	43.4	35.8	35.4	25.8	46.4	46.1	37.9	37.3	27.0
	KW	3.93	3.95	3.95	4.04	4.14	3.97	3.98	3.97	4.06	4.15	4.00	4.01	3.99	4.08	4.17
95	T.C.	43.2	42.9	42.0	46.9	47.9	45.3	44.8	43.0	48.0	48.4	47.3	46.7	44.1	49.1	48.9
	S.C.	40.1	39.6	32.7	32.4	23.9	42.1	42.3	34.8	34.6	25.0	44.2	45.0	36.9	36.7	26.1
	KW	4.22	4.22	4.22	4.34	4.46	4.26	4.26	4.24	4.36	4.47	4.30	4.30	4.27	4.39	4.49
105	T.C.	39.8	39.3	37.3	42.4	43.5	41.6	41.1	38.4	43.4	44.0	43.4	42.8	39.5	44.3	44.5
	S.C.	36.8	36.7	30.7	30.7	22.7	38.6	39.0	32.7	32.8	23.7	40.5	41.2	34.7	34.9	24.8
	KW	4.52	4.52	4.49	4.62	4.77	4.57	4.57	4.52	4.65	4.79	4.61	4.61	4.55	4.67	4.81
115	T.C.	36.4	35.9	32.7	37.9	39.3	38.0	37.5	33.9	38.9	39.7	39.6	39.0	35.1	39.8	40.2
	S.C.	33.6	34.0	28.7	29.0	21.5	35.2	35.7	30.6	31.1	22.5	36.9	37.4	32.5	33.1	23.6
	KW	4.82	4.82	4.76	4.89	5.07	4.87	4.86	4.79	4.92	5.10	4.92	4.91	4.82	4.95	5.13
125	T.C.	33.1	32.4	28.1	33.5	35.0	34.5	33.8	29.4	34.4	35.5	35.9	35.3	30.6	35.2	35.9
	S.C.	30.4	31.2	26.7	27.3	20.3	31.9	32.5	28.5	29.3	21.3	33.3	33.7	30.4	31.3	22.3
	KW	5.11	5.11	5.02	5.17	5.38	5.17	5.16	5.06	5.20	5.41	5.22	5.21	5.09	5.23	5.44

NOTE: ALL CAPACITIES INCLUDE INDOOR FAN HEAT. KW VALUES ARE FOR THE SYSTEM (OUTDOOR + INDOOR).

Multipliers for determining the performance with other indoor sections.

NOTE: For dry bulb temperatures different than those listed (between 73-87 °F), sensible capacity increases by 1060 BTUH per 1000 CFM per degree above the listed temperature and decreases by 1060 BTUH per 1000 CFM per degree below the listed temperature.

Air Handlers	Coils	T.C.	S.C.	KW
–	FC/MC/PC48	1.00	1.00	1.00
–	FC/MC/PC60	1.00	1.00	1.00
–	UC48	1.00	1.00	1.00
–	UC60	1.00	1.00	1.00
AHE48D	–	0.98	1.01	0.94
AHR48D	–	1.00	1.01	1.00
AHV48D	–	0.99	0.99	0.95
AHV60D	–	1.00	1.02	0.92
AV*48	–	1.00	1.02	0.92
AV*60	–	1.00	1.02	0.92
MV16C	FC/MC48C	1.00	1.02	0.92
MV16C	FC60C	0.99	1.01	0.95
MV20D	FC/MC48D	1.00	1.02	0.92
MV20D	FC/MC60D	1.00	1.02	0.92
MX16C	FC/MC48C	1.01	1.03	0.97
MX20D	FC/MC48D	1.00	0.99	0.94
MX20D	FC/MC60D	1.01	1.01	0.93

Furnaces	Coils	T.C.	S.C.	KW
T*(8,L)V*C16	FC/MC/PC48C	1.00	1.02	1.00
T*(8,L)V*C16	FC/PC60C	1.00	1.02	1.00
T*(8,L)V*C20	FC/MC/PC48C	1.00	1.02	1.00
T*(8,L)V*C20	FC/PC60C	1.00	1.02	0.96
T*(8,L)X*C16	FC/MC/PC48C	1.00	1.00	1.00
T*(8,L)X*C16	FC/PC60C	1.00	1.01	1.00
T*(8,L)X*C20	FC/MC/PC48C	1.00	1.00	1.00

Furnaces	Coils	T.C.	S.C.	KW
T*(8,L)X*C20	FC/MC/PC60D	1.00	1.01	1.00
T*9(C,V)*C16	FC/MC/PC48C	1.00	1.01	1.00
T*9(C,V)*C16	FC/PC60C	1.00	1.02	1.00
T*9(C,V)*C20	FC/MC/PC48C	1.00	1.01	1.00
T*9(C,V)*C20	FC/PC60C	1.00	1.02	1.00
T*9(C,V)*D20	FC/MC/PC48D	1.00	1.02	1.00
T*9(C,V)*D20	FC/MC/PC60D	1.00	1.02	1.00
T*9X*C16	FC/MC/PC48C	1.00	1.01	1.00
T*9X*C16	FC/PC60C	0.98	1.01	0.98
T*9X*C16	UC60C	0.98	1.01	0.98
T*9X*C20	FC/MC/PC48C	1.00	1.00	1.00
T*9X*C20	FC/PC60C	0.98	1.01	0.98
T*9X*C20	UC60C	0.98	1.01	0.98
T*9X*D20	FC/MC/PC48D	1.00	1.01	1.00
T*9X*D20	FC/MC/PC60D	0.99	0.98	0.99
Y*(8,L)C*C16	FC/MC/PC48C	1.00	1.02	1.00
Y*(8,L)C*C16	FC/PC60C	1.00	1.02	1.00
Y*(8,L)C*C20	FC/MC/PC48C	1.00	1.02	1.00
Y*(8,L)C*C20	FC/PC60C	1.00	1.02	0.96
Y*9C*C16	FC/MC/PC48C	1.00	1.01	1.00
Y*9C*C16	FC/PC60C	1.00	1.02	1.00
Y*9C*C20	FC/MC/PC48C	1.00	1.01	1.00
Y*9C*C20	FC/PC60C	1.00	1.02	1.00
Y*9C*D20	FC/MC/PC48D	1.00	1.02	1.00
Y*9C*D20	FC/MC/PC60D	1.00	1.02	1.00

COOLING PERFORMANCE DATA

AIR CONDITIONER MODEL NO.		TCGD60S41S3(E)														
INDOOR COIL MODEL NO.		FC/MC/PC60														
CONDENSING ENTERING AIR TEMPERATURE	IDCFM	1600					1800					2000				
	ID DB (°F)	80	80	75	80	80	80	80	75	80	80	80	80	75	80	80
	ID WB (°F)	57	62	62	67	72	57	62	62	67	72	57	62	62	67	72
65	T.C.	55.5	55.5	61.1	59.4	62.4	64.9	57.7	62.9	60.1	63.8	66.9	59.9	64.7	60.8	65.3
	S.C.	54.5	54.5	49.8	40.0	39.7	28.6	56.4	52.4	42.4	41.2	30.8	58.3	54.9	44.9	42.7
	KW	3.68	3.68	3.73	3.74	3.76	3.80	3.77	3.81	3.81	3.85	3.88	3.86	3.90	3.89	3.94
75	T.C.	54.5	54.5	58.5	56.4	60.1	63.1	56.6	60.3	57.4	61.6	65.0	58.8	62.2	58.4	63.1
	S.C.	52.1	52.1	48.7	39.2	38.7	28.5	53.9	51.3	41.6	40.4	30.4	55.8	53.9	44.1	42.1
	KW	4.14	4.14	4.17	4.17	4.21	4.26	4.23	4.25	4.25	4.29	4.34	4.31	4.34	4.33	4.38
85	T.C.	53.4	53.4	55.9	53.3	57.7	61.4	55.5	57.8	54.7	59.3	63.1	57.7	59.7	56.0	60.8
	S.C.	49.7	49.7	47.6	38.3	37.7	28.4	51.5	50.2	40.8	39.6	30.1	53.2	52.8	43.2	41.5
	KW	4.59	4.59	4.61	4.60	4.66	4.71	4.68	4.69	4.69	4.74	4.80	4.77	4.77	4.77	4.82
95	T.C.	52.4	52.4	53.4	50.3	55.4	59.6	54.4	55.3	51.9	57.0	61.2	56.5	57.2	53.6	58.6
	S.C.	47.3	47.3	46.5	37.5	36.7	28.4	49.0	49.1	40.0	38.8	29.8	50.6	51.8	42.4	40.9
	KW	5.05	5.05	5.05	5.03	5.10	5.17	5.13	5.13	5.12	5.18	5.26	5.22	5.21	5.21	5.26
105	T.C.	49.4	49.4	50.0	46.7	51.7	55.4	51.7	52.0	48.3	53.3	57.2	54.0	53.9	50.0	54.9
	S.C.	44.6	44.6	44.4	36.2	35.2	26.9	46.3	46.6	38.6	37.4	28.4	48.0	48.9	41.0	39.5
	KW	5.64	5.64	5.63	5.61	5.70	5.78	5.73	5.72	5.70	5.78	5.87	5.83	5.81	5.80	5.86
115	T.C.	46.6	46.6	46.7	43.3	48.1	51.4	49.1	48.7	44.8	49.7	53.3	51.5	50.8	46.4	51.3
	S.C.	42.0	42.0	42.3	34.9	33.8	25.4	43.7	44.2	37.3	36.1	27.0	45.5	46.1	39.7	38.3
	KW	6.21	6.21	6.20	6.17	6.29	6.37	6.32	6.30	6.27	6.37	6.47	6.42	6.40	6.36	6.45
125	T.C.	43.7	43.7	43.5	39.8	44.5	47.3	46.4	45.5	41.3	46.1	49.4	49.1	47.6	42.9	47.7
	S.C.	39.3	39.3	40.3	33.7	32.5	24.0	41.1	41.8	36.0	34.7	25.6	43.0	43.2	38.3	37.0
	KW	6.79	6.79	6.77	6.73	6.87	6.96	6.90	6.88	6.83	6.95	7.06	7.01	6.98	6.93	7.03

NOTE: ALL CAPACITIES INCLUDE INDOOR FAN HEAT. KW VALUES ARE FOR THE SYSTEM (OUTDOOR + INDOOR).

Multipliers for determining the performance with other indoor sections.

NOTE: For dry bulb temperatures different than those listed (between 73-87 °F), sensible capacity increases by 1060 BTUH per 1000 CFM per degree above the listed temperature and decreases by 1060 BTUH per 1000 CFM per degree below the listed temperature.

Air Handlers	Coils	T.C.	S.C.	KW
–	FC/MC/PC60	1.00	1.00	1.00
–	FC/MC62	1.00	1.00	1.00
–	FC64	1.00	1.01	1.00
–	UC60	1.00	1.00	1.00
AHE60D	–	1.03	1.03	1.00
AHR60D	–	1.00	1.00	1.00
AHV60D	–	1.00	1.00	1.00
AV*60	–	1.02	1.01	1.00
MV20D	FC/MC60D	1.00	1.00	1.00
MV20D	FC/MC62D	1.00	1.00	1.00
MV20D	FC64D	1.00	1.01	1.00
MX20D	FC/MC60D	1.01	1.01	1.00
MX20D	FC/MC62D	1.02	1.01	1.00
MX20D	FC64D	1.03	1.03	1.00

Furnaces	Coils	T.C.	S.C.	KW
T*(8,L)V*C20	FC/MC62D	0.99	0.97	1.00
T*(8,L)V*C20	FC/PC60C	0.97	0.96	1.00
T*(8,L)V*C20	FC64D	1.00	0.98	1.00
T*(8,L)V*C20	UC60C	0.95	0.91	1.00
T*(8,L)X*C16	FC/PC60C	0.99	0.98	1.00
T*(8,L)X*C16	UC60C	0.98	0.97	1.00
T*(8,L)X*C20	FC/MC/PC60D	1.00	0.98	1.00
T*(8,L)X*C20	FC/MC62D	1.00	0.98	1.00
T*(8,L)X*C20	FC64D	1.00	0.98	1.00
T*(8,L)X*C20	UC60C	0.99	1.00	1.00
T*(8,L)X*C20	UC60D	0.99	1.00	1.00

Furnaces	Coils	T.C.	S.C.	KW
T*9(C,V)*C20	FC/MC62D	0.98	0.97	1.00
T*9(C,V)*C20	FC/PC60C	0.96	0.96	1.00
T*9(C,V)*C20	UC60C	0.94	0.91	1.00
T*9(C,V)*D20	FC/MC/PC60D	0.97	0.96	1.00
T*9(C,V)*D20	FC/MC62D	0.98	0.97	1.00
T*9(C,V)*D20	UC60D	0.94	0.91	1.00
T*9X*C20	FC/MC/PC60D	0.99	0.98	1.00
T*9X*C20	FC/PC60C	0.98	0.97	1.00
T*9X*C20	FC64D	1.00	0.98	1.00
T*9X*C20	UC60C	0.98	0.97	1.00
T*9X*C20	UC60D	0.98	0.97	1.00
T*9X*D20	FC/MC/PC60D	0.99	0.98	1.00
T*9X*D20	FC64D	1.00	0.98	1.00
T*9X*D20	UC60D	0.98	0.97	1.00
Y*(8,L)C*C20	FC/MC62D	0.99	0.97	1.00
Y*(8,L)C*C20	FC/PC60C	0.97	0.96	1.00
Y*(8,L)C*C20	FC64D	1.00	0.98	1.00
Y*(8,L)C*C20	UC60C	0.95	0.91	1.00
Y*9C*C20	FC/MC62D	0.98	0.97	1.00
Y*9C*C20	FC/PC60C	0.96	0.96	1.00
Y*9C*C20	FC64D	1.00	0.98	1.00
Y*9C*C20	UC60C	0.94	0.91	1.00
Y*9C*D20	FC/MC/PC60D	0.97	0.96	1.00
Y*9C*D20	FC/MC62D	0.98	0.97	1.00
Y*9C*D20	FC64D	1.00	0.98	1.00
Y*9C*D20	UC60D	0.94	0.91	1.00

NOTES

Subject to change without notice. Published in U.S.A.
Copyright © 2012 by Johnson Controls, Inc. All rights reserved.

840623-YTG-B-1012
Supersedes: 840623-YTG-A-0612

York International Corp.
5005 York Drive
Norman, OK 73069