YORK®
Heating and Air Conditioning

TECHNICAL GUIDE

MODEL: GY8S160E30UH21

GAS-FIRED COMMERCIAL BELT-DRIVE MID-EFFICIENCY MULTI-POSITION UPFLOW/HORIZONTAL FURNACE

160 MBH INPUT

Due to continuous product improvement, specifications are subject to change without notice.

Visit us on the web at www.york.com for the most up-to-date technical information.

Additional information can be found at www.gamanet.org.

DESCRIPTION

This mid-high efficiency, compact unit employs induced combustion, reliable hot surface ignition and high heat transfer tubular heat exchangers. The unit is factory shipped for installation in upflow or horizontal applications.

This furnace is designed for residential and commercial applications. The unit is factory assembled, wired and tested to assure safe dependable and economical installation and operation.

The unit is Category I listed and may be common vented with another gas appliance as allowed by the National Fuel Gas Code.

WARRANTY

20-year limited warranty on the heat exchanger.

10-year heat exchanger warranty on commercial applications.

5-year limited parts warranty.

FEATURES

- Easily applied in upflow, horizontal left or horizontal right installation with no conversion necessary
- Electronic hot surface ignition with high reliability and dependability
- 100% shut off main gas valve for added safety
- Rollout safety control
- Large belt-drive blower for high CFM and static capability
- 1-1/2 HP ball bearing motor
- Reliable hot surface igniter
- Aluminized steel tubular heat exchanger for long term durability
- High quality inducer motor for quiet operation
- Standard terminals for controlling humidifiers and EAC' s or other commercial application requirements
- 40 VA control transformer fuse protected
- Easy to connect power and control wiring
- Efficiency ratings of 78 AFUE attained by using tubular heat exchangers
- Cooling relay supplied for easy installation of add-on cooling
- Adjustable fan-off settings to eliminate " cold-blow"
- Compact 43-1/2 in. height allows installation in small space confines
- Equipped with timer relay providing motor protection if operated on continuous blower or if unit is " twinned"
- 208/230 volt operation, convertible for 115 volt
- Model is propane convertible
- Attractive pre-paint finished steel cabinet for durability and corrosion resistance

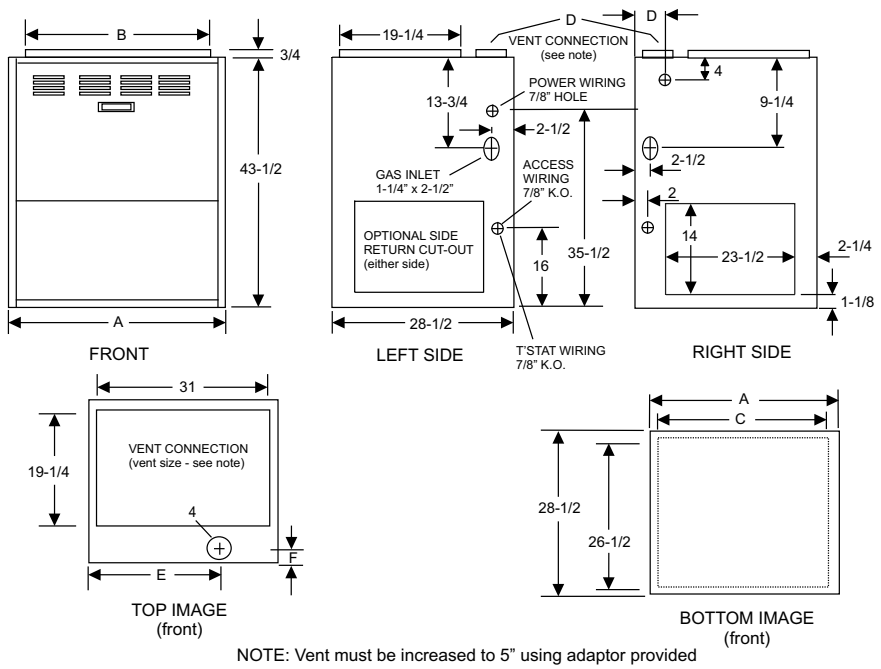

NOTE: Vent must be increased to 5" using adaptor provided

CABINET AND DUCT DIMENSIONS

Model Number	Nominal CFM	Cabinet Dimension					
		A(in.)	B(in.)	C(in.)	D(in.)	E(in.)	F(in.)
GY8S160E30UH21	3500	32 1/4	31	30 1/4	4.0	19 1/8	3 3/4

RATINGS & PHYSICAL / ELECTRICAL DATA - UPFLOW MODELS

Model	Input	Output	Nominal Airflow	Cabinet Width	Air Temp. Rise		AFUE	Operation Weight
	MBH	MBH	CFM	Inches	°F	°C		Lbs
GY8S160E30UH21	160	130	3500	32-1/4	25-55	13-31	78.0	250

Model	Max. Outlet Air Temp		Blower		Blower Size	Total Unit Amps	Max Over-current protection	Min. Wire size (awg) @ 75 ft. one way
	°F	°C	Hp	Amps @ 230 VAC	Inches			
GY8S160E30UH21	150	65.6	1.5	10	12 x 15			
	208/230 VAC (ONLY)					15	20	12
	115 AND 208/230 VAC (SPLIT)					6 & 11	15	12
	115 VAC (ONLY)[3]					27	30	10

1. AFUE numbers are determined in accordance with DOE test procedures.
2. Wire size and overcurrent protection must comply with the National Electrical Code (ANSI/NFPA-70-latest edition).
3. Motor must be converted for 115 VAC operation.
4. For altitudes above 2,000 ft., reduce capacity 4% for each 1,000 ft. above sea level. Refer to Form 650.74-N1.1V
5. Wire size based on copper conductors, 60°C, 3% voltage drop.
6. See Replacement Parts list for LP gas and High Altitude conversion kits. External filter kits (bottom & sides) are also available for models above. Continuous return air temperatures must not be below 55°F (13°C).

HORIZONTAL VENTING - WITH APPROVED AUXILIARY POWER VENTER

Horizontal Vent Length Ft (m) with 4 Elbows		
Pipe Size	Minimum Vent Length	Maximum Vent Length
Inches	Feet	Feet
5	4.5	34.5

RECOMMENDED FILTER SIZES

Model Number	Add-on Cooling		Side Return	Bottom/End Return
	Tons	CFM @ 0.80" ESP, 230V	Inches.	Inches.
GY8S160E30UH21	5, 6, 7-1/2	3318	16 x 25	(2) 16 x 29

NOTES:
1. Air velocity through throwaway type filters may not exceed 300 feet per minute. All velocities over this require the use of high velocity filters.
2. Air flows above 1800 CFM require either return from two sides or one side plus bottom.

BLOWER PERFORMANCE CFM - UPFLOW / HORIZONTAL (WITHOUT FILTER) - BOTTOM RETURN OPENING

Voltage	Motor Pulley Turns	0.3	0.4	0.5	0.6	0.7	0.8	0.9	1.0
		CFM	CFM	CFM	CFM	CFM	CFM	CFM	CFM
230 VAC	Closed	+	+	+	+	3467	3318	3163	2950
	1. Open	3820	3687	3550	3406	3240	3066	2846	2589
	2. Open	3575	3433	3269	3096	2913	2700	2449	
	3. Open	3375	3205	2096	2807	2585	2293		
	4. Open	2805	2715	2570	2351	2017			
208 VAC	Closed	+	+	+	+	3383	3242	3100	2890
	1. Open	3674	3555	3423	3283	3144	2990	2789	2655
	2. Open	3543	3370	3213	3055	2888	2673	2420	
	3. Open	3375	3210	3035	2850	2633	2334		
	4. Open	3100	2919	2708	2498	2226			

NOTES:
1. Airflow expressed in standard cubic feet per minute (CFM) and in cubic meters per minute (m^3/min).
2. Operation at these conditions will cause the motor to overload. Do not operate the furnace at these conditions.

Shaded area denotes a condition that may cause excessive furnace temperature rise. Refer to Table 8 or the ratingplate for allowable temperature rise range.

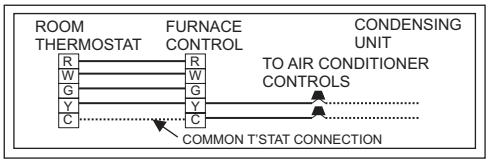

HEATING AND COOLING THERMOSTAT CONNECTIONS

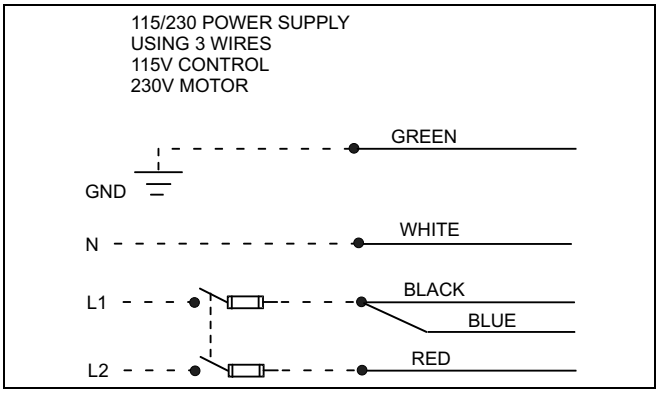

ELECTRICAL WIRING - 1

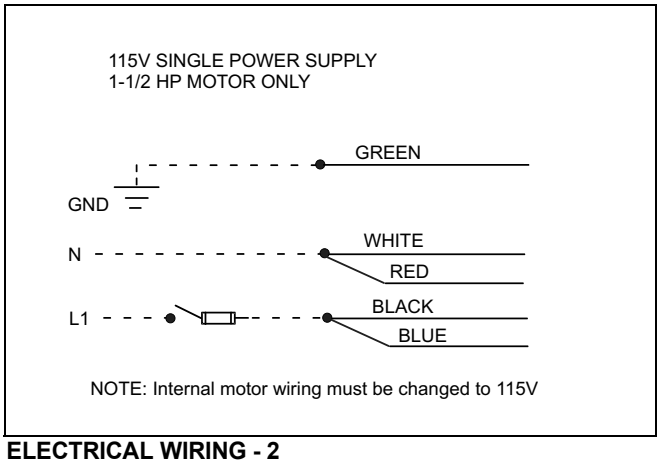

ELECTRICAL WIRING - 2

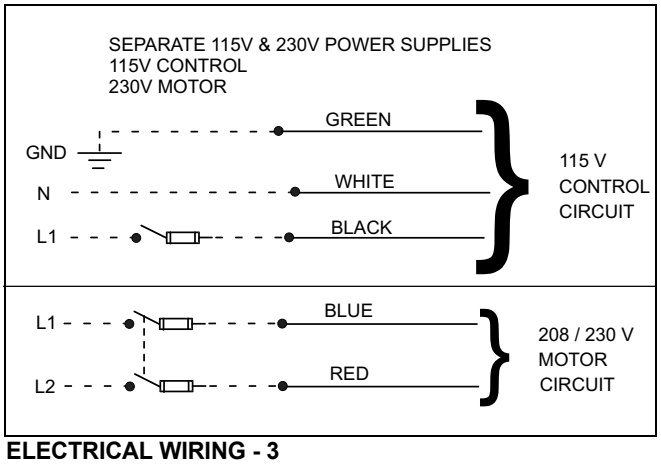

ELECTRICAL WIRING - 3

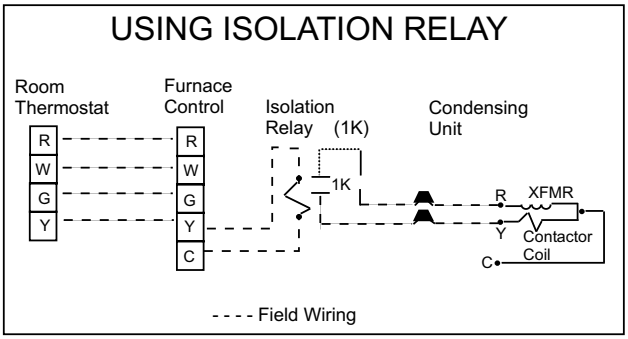

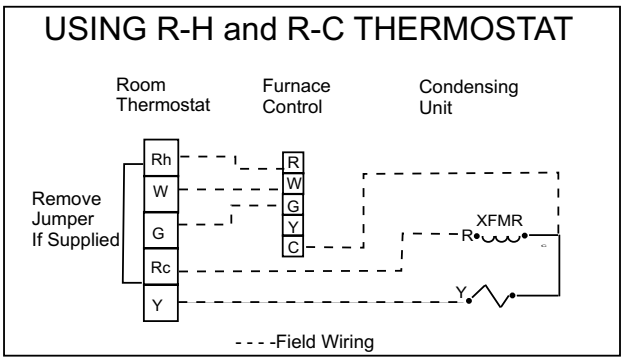

TYPICAL THERMOSTAT WIRING WITH COMMERCIAL CONDENSING UNIT

FILTER PERFORMANCE

The airflow capacity data published in the " Blower Performance" table listed above represents blower performance WITHOUT filters. To determine the approximate blower performance of the system, apply the filter drop value for the filter being used or select an appropriate value from the " Filter Performance" table shown below.

NOTE: The filter pressure drop values in the " Filter Performance" table shown below are typical values for the type of filter listed and should only be used as a guideline. Actual pressure drop ratings for each filter type vary between filter manufacturers.

FILTER PERFORMANCE - PRESSURE DROP INCHES W.C.

Airflow Range	Filter Type - Belt Drive Furnace - Bottom Return			
	Fiberglass		Washable Fiber	Pleated
	High Velocity	Disposable		High Velocity
	1" Thick	2" Thick	1" Thick	4" Thick
SCFM	in. w.c.	in. w.c.	in. w.c.	in. w.c.
1500-2300	0.05	0.05	0.05	0.05
2300-2800	0.08	0.10	0.10	0.10
2800-3100	0.10	0.15	0.20	0.15
3100-3500	0.20	0.20	0.25	0.20

UNIT CLEARANCES TO COMBUSTIBLES (ALL SURFACES IDENTIFIED WITH THE UNIT IN A VERTICAL POSITION)

Application	Top	Front	Rear	Left Side	Right Side	Flue	Floor/ Bottom	Closet	Alcove	Attic	Line Contact
Upflow	1	6	0	0	3	6	Combustible	Yes	Yes	Yes	No
Upflow B-Vent	1	3	0	0	0	1	Combustible	Yes	Yes	Yes	No
Horizontal	1	6	0	0	3	6	Combustible	No	Yes	Yes	Yes[1]
Horizontal B-Vent	1	3	0	0	0	1	Combustible	No	Yes	Yes	Yes[1]

1. Line contact only permitted between lines formed by the intersection of the rear panel and side panel (top in horizontal postion) of the furance jacket and building joists, studs or framing.
2. All dimensions are in inches.

APPLYING FILTER PRESSURE DROP TO DETERMINE SYSTEM AIRFLOW

To determine the approximate airflow of the unit with a filter in place, follow the steps below:

1. Select the filter type.
2. Select the number of return air openings or calculate the return opening size in square inches to determine the proper filter pressure drop.
3. Determine the External System Static Pressure (ESP) without the filter.
4. Select a filter pressure drop from the table based upon the number of return air openings or return air opening size and add to the ESP from Step 3 to determine the total system static.
5. If total system static matches a ESP value in the airflow table (i.e. 0.20 w.c. (50 Pa), 0.60 w.c. (150 Pa), etc.,) the system airflow corresponds to the intersection of the ESP column and motor pulley turns open.
6. If the total system static falls between ESP values in the table (i.e. 0.58 w.c. (144 Pa), 0.75 w.c. (187 Pa), etc.), the static pressure may be rounded to the nearest value in the table determining the airflow using Step 5 or calculate the airflow by using the following example.

Example: For a 160,000 BTUH (46.9 kW) furnace @ 230V with bottom return opening and operating with the pulley 1 turn open, it is found that total system static is 0.58" w.c. To determine the system airflow, complete the following steps:

Obtain the airflow values at 0.50 w.c. (125 Pa) & 0.60 w.c. (150 Pa) ESP.

Airflow @ 0.50" : 3550 CFM (100.5 m^3/min)

Airflow @ 0.60" : 3406 CFM (96.5 m^3/min)

Subtract the airflow @ 0.50 w.c. (125 Pa) from the airflow @ 0.60 w.c. (150 Pa) to obtain airflow difference.

3406 - 3550 = -144 CFM (4.08 m^3/min)

Subtract the total system static from 0.50 w.c. (125 Pa) and divide this difference by the difference in ESP values in the table, 0.60 w.c. (150 Pa) - 0.50 w.c. (125 Pa), to obtain a percentage.

(0.58 - 0.50) / (0.60 - 0.50) = 0.8

Multiply percentage by airflow difference to obtain airflow reduction.

(0.8) X (-144) = -115.2

Subtract airflow reduction value to airflow @ 0.50 w.c. (125 Pa) to obtain actual airflow @ 0.58 inwc (144 Pa) ESP.

3550 - 115.2 = 3434.8

ACCESSORIES

Propane Conversion Kit – 1NP0349

This accessory conversion kit may be used to convert natural gas units for propane (LP) operation. Conversion should be made by qualified distributor or dealer personnel.

High Altitude Pressure Switch Kit – 1PS0301

For installation where the altitude is less than 8,000 feet it is not required that the pressure switch be changed. For altitudes above 8,000 feet see kits below. Conversion must be made by qualified distributor or dealer personnel.

External Side Return Filter Rack – 1SR0402 (Upflow)

Provides a 16 x 25 cleanable, high velocity type filter and attaches to the furnace side panel and the return air duct. The filter is easily replaced. Package contains six filter racks with filters.

External Bottom Filter Rack or Horizontal End Return – 1BR0432

Application of " High Velocity" rack provides opening for (2) 16" x 29" filters (not supplied). Attached to the end of the furnace and provides duct flanges. Will accept up to 2" filters.

NOTES

Subject to change without notice. Published in U.S.A.
Copyright © 2011 by Johnson Controls, Inc. All rights reserved.

286124-YTG-B-1211
Supersedes: 286124-YTG-A-0407

Johnson Controls Unitary Products
5005 York Drive
Norman, OK 73069